Riko Rosman
Hrvatska akademija znanosti i umjetnosti
Zrinski trg 11, 10000 Zagreb

Izvorni znanstveni članak
Prihvaćen za tisak: 14. 05. 2004
UDK 62

STATICS OF THE LATERALLY LOADED SHEAR-FLEXURE BEAM WITH HINGED END AND ELASTIC INTERIOR SUPPORTS

Abstract

Applying the principle of the minimum complementary energy a simple method is developed for the determination of the response quantities of the shear-flexure beam with hinged laterally fix end supports and laterally elastic interior supports subjected to lateral loads at the nodes. For up to seven-span beams closed-form solutions are derived, whilst for beams with eight or more spans formulas are given for the coefficients and load-terms of the compatibility equations' system, so that the response quantities can easily be obtained. The general method includes, as limit or special cases, the solutions for the shear beam with elastic supports, the flexure beam with elastic supports and the simple shear-flexure beam without interior supports.

As practical applications of the developed theory flat-roofed diaphragms in the form of either stressed-skin deckings or longitudinal trusses and grid structures are dealt with and the corresponding stiffnesses defined. A numerical example of a typical industrial building illustrates both the general and the special-case approaches and a discussion of the results points out the effect of the system's parameters onto its response.

The paper intends to contribute to an easier design and preliminary and simple final analyses of some spatial building structures.

Keywords: *shear-flexure beam, lateral loads, response quantities, complementary energy, flexure beam, shear beam*

1. INTRODUCTION

Fig. 1a shows one half of the beam with hinged laterally fix end supports and interior laterally elastic supports represented by springs; the left figure refers to the system with an even, the right to the system with an odd number of spans.

Beam's geometry. l..span; N..number of spans; n..number of interior supports on one side of the beam's symmetry axis including, in the case of an even N, that on the symmetry axis; j..ordinal number of an interior support and ordinal number of the span between the supports $j-1$ and j; L..beam's total length.

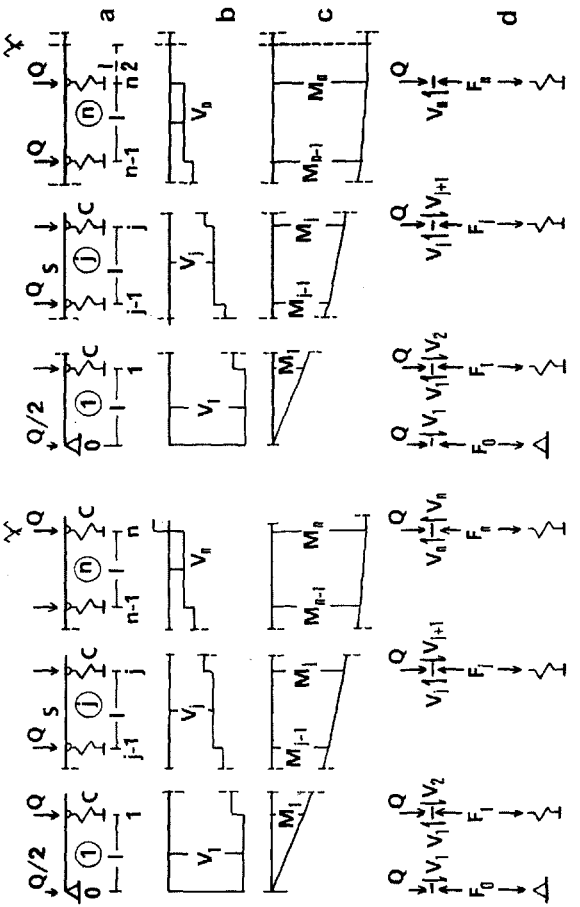

Fig. 1. a) Mechanical models of a half of a shear-flexure beam with an even and an odd number of spans, hinged laterally fix end supports and interior laterally elastic supports subjected to lateral loads at the nodes. Corresponding b) shear-force and c) bending moment diagrams. d) Free-body diagrams of the beam's nodes and actions onto the supports

The two numbers n and N are related according to

$$n = \begin{cases} \dfrac{N}{2} & (N \text{ even}) \\ \dfrac{N-1}{2} & (N \text{ odd}) \end{cases} \tag{1}$$

The number of interior supports is N-1.

Beam's cross-sectional stiffnesses. The shear stiffness (force) and the bending stiffness (force · length^2) are defined as

$$K_V = GA_V, \quad K_M = EI, \tag{2}$$

respectively; G and A_V denote the shear modulus and the cross-sectional shear area, E and I the modulus of elasticity and the cross-section's moment of inertia.

Springs' stiffness. The stiffness of a spring, C (force/length), is defined as the action onto the spring which produces an unit displacement of its top.

Loading. The lateral load consists of concentrated loads Q at the interior and $Q/2$ at the end supports.

The beam's geometric and stiffness characteristics and the loads are assumed as constant along the system's length.

Degree of static redundancy. Obviously, the system is statically indeterminate to the n-th degree.

Dimensionless stiffness parameters. For practical reasons, two system's dimensionless stiffness parameters are defined according to

$$a = \frac{Cl^3}{6K_M}, \quad b = \frac{Cl}{K_V}. \tag{3}$$

With respect to these parameters, three limit cases of the general system dealt with are:
1) The shear beam with elastic interior supports ($K_M = \infty$; $a = 0$),
2) The flexure beam with elastic interior supports ($K_V = \infty$; $b = 0$),
3) The simple shear flexure beam ($C = 0$; $a = b = 0$).

2. SURVEY OF THE RESPONSE QUANTITIES AND RELATIONS BETWEEN THEM

The applied load produces in the beam shear forces V (Fig.1b) and bending moments M (Fig.1c); the supports are subjected to actions F (Fig.1d).

The beam's bending moments $M_1..M_n$ at its interior supports are chosen as the redundants. They must satisfy the boundary condition

$$M_0 = 0 \tag{4}$$

and the symmetry condition

$$M_{n+1} = \begin{cases} M_{n-1} & (N \text{ even}) \\ M_n & (N \text{ odd}) \end{cases} \tag{5}$$

The other response quantities can be expressed through the bending moments as follows.

j-th span's shear force:

$$V_j = \frac{M_j - M_{j-1}}{l}, \qquad (j = 1..n)$$

with $V_1 = M_1/l$ for the first span. (6)

End and interior supports' actions:

$$\left.\begin{aligned} F_0 &= \frac{Q}{2} + V_1 = \frac{Q}{2} + \frac{M_1}{l}, \\ F_j &= Q + V_{j+1} - V_j = Q + \frac{M_{j+1} - 2M_j + M_{j-1}}{l}, \quad (j = 1..n) \\ F_n &= \begin{cases} Q - 2V_n = Q - 2\dfrac{M_n - M_{n-1}}{l}, & (N \text{ even}) \\ Q - V_n = Q - \dfrac{M_n - M_{n-1}}{l}. & (N \text{ odd}) \end{cases} \end{aligned}\right\} \tag{7}$$

Displacements of the springs' top:

$$w_j = \frac{F_j}{C}. \qquad (j = 1..n) \tag{8}$$

3. BEAM'S COMPLEMENTARY ENERGY AND CORRESPONDING EQUATIONS OF THE PRINCIPLE OF THE MINIMUM COMPLEMENTARY ENERGY

Contributions of shear and flexure to the complementary energy of the beam's *j*-th span (*j* = *1..N*):

$$U_{B,V,j} = \int_l \frac{V_j^2}{2K_V} dl = \frac{1}{2K_V l}(M_j - M_{j-1})^2, \tag{9}$$

$$U_{B,M,j} = \int_l \frac{M_{j-1,j}^2}{2K_M} dl = \frac{1}{6K_M}(M_{j-1}^2 + M_{j-1}M_j + M_j^2). \tag{10}$$

Herein dl denotes a differential of the beam's length and $M_{j-1,j}$ the bending moment at an arbitrary section in the j-th span. Because the shear forces perform no work on the flexural deformation and the bending moments perform no work on the shear deformation, the total j-th span's complementary energy is the sum of both contributions.

Complementary energy of the *j*-th spring (*j* = *1..N–1*):

$$U_{C,j} = \frac{F_j^2}{2C} = \frac{1}{2Cl^2}(Ql + M_{j+1} - 2M_j + M_{j-1})^2. \tag{11}$$

The system's total complementary energy, i.e. that of its both halves, is the sum of the contributions of the N beam spans and the N-1 springs.

For the **two-spans beam** ($N = 2$) and the **three-spans beam** ($N = 3$) the Cl^2-fold complementary energy is found to amount

$$Cl^2 = (a+b)M_1^2 + \frac{1}{2}(Ql - 2M_1)^2, \tag{12}$$

$$Cl^2U = (5a+b)M_1^2 + (Ql - M_1)^2, \tag{13}$$

respectively.

For beams with an even number of spans equal to or larger than four and for beams with an odd number of spans equal to or larger than five the Cl^2-fold complementary energy is given by the general equations

$$Cl^2U = (Ql + M_2 - M_1)^2 + \sum_{j=2}^{n-1}(Ql + M_{j+1} - 2M_j + M_{j-1})^2$$

$$+\frac{1}{2}(Ql-2M_n+2M_{n-1})^2+2a\left[M_1^2+\sum_{j=2}^{n}(M_{j-1}+M_{j-1}M_j+M_j^2)\right] \tag{14}$$

$$+b\left[M_1^2+\sum_{j=2}^{n}(M_j-M_{j-1})\right],$$

$$Cl^2U=(Ql+M_2-2M_1)^2+\sum_{j=2}^{n-1}(Ql+M_{j+1}-2M_j+M_{j-1})^2$$

$$+(Ql-M_n+M_{n-1})^2+2a\left[M_1^2+\sum_{j=2}^{n}(M_{j-1}^2+M_{j-1}M_j+M_j^2)+\frac{3}{2}M_n^2\right]$$

$$+b\left[M_1^2+\sum_{j=2}^{n}(M_j-M_{j-1})^2\right], \tag{15}$$

respectively. Herewith, the system's complementary energy is expressed as a function of the applied loads Q and the redundants M_1.. M_n.

According to the principle of minimum complementary energy, or the Castigliano's theorem of least work, the first partial derivative of U and, hence, Cl^2U, with respect to each redundant must vanish,

$$\frac{\partial(Cl^2U)}{\partial M_j}=0. \qquad (j=1..n) \tag{16}$$

These conditions for locating the minimum of U are identical with the geometrical compatibility requirements; obviously, they can also be obtained directly.

4. RESPONSE QUANTITIES EXPRESSED THROUGH REFERENCE VALUES AND DIMENSIONLESS COEFFICIENTS. GENERAL FORM OF THE COMPATIBILITY EQUATIONS' SYSTEM

To obtain simple formulations suitable for practical applications, the system's response quantities are expressed as a product of a dimensionless coefficient and a reference value.

Redundants, i.e. the beam's bending moments over its interior supports:

$$M_j = m_j Ql. \qquad (j = 1..n) \tag{17}$$

Herewith, the shear forces follow to amount

$$V_j = v_j Q, \qquad (j = 1..n) \tag{18}$$

where

$$v_j = m_j - m_{j-1}. \qquad (j = 1..n) \tag{19}$$

End and interior supports' actions:

$$\left.\begin{aligned} F_0 &= f_0 \frac{Q}{2}, \\ F_j &= f_j Q, \qquad (j = 1..n) \end{aligned}\right\} \tag{20}$$

where

$$\left.\begin{aligned} f_0 &= 1 + 2m_1, \\ f_j &= 1 + m_{j+1} - 2m_j + m_{j-1}, \qquad (j = 1..n) \\ f_n &= \begin{cases} 1 - 2m_n + 2m_{n-1} & (N \text{ even}) \\ 1 - m_n + m_{n-1} & (N \text{ odd}) \end{cases} \end{aligned}\right\} \tag{21}$$

Displacements at the interior supports:

$$w_j = f_j \frac{Q}{C}. \qquad (j = 1..n) \tag{22}$$

It will be shown that the response quantities' coefficients are functions only of the two system's stiffness parameters a and b.

After performing the derivations, Eqs. (16) yield the linear argebraic compatibility equations' system

$$[d]_n \{m\}_n = \{d_Q\}_n, \tag{23}$$

where $[d]$ is a symmetric 5-termed band matrix and

$$d_{Q1} = 1, \qquad d_{Q2} = d_{Q3} = \ldots = d_{Qn} = 0 \tag{24}$$

are the system's load terms.

The solution of Eq. (23) yields the redundants', i.e. the bending moments' coefficients $m_1 .. m_n$; for $n \leq 3$ simple closed-form solutions are given, whilst for $n \geq 4$ any of the known hand or computerized procedures can be applied. Once the m-values are determined, the shear-force coefficients $v_1 .. v_n$ and the support actions' and displacements' coefficients $f_1 .. f_n$ follow from their general Eqs. (19-21), the response quantities themselves from their general Eqs. (17), (18), (20), (22).

5. TWO-SPANS AND THREE-SPANS BEAMS ($n = 1$)

Compatibility equation:

$$d_{11} m_1 = 1. \tag{25}$$

Coefficients of the response quantities:

$$m_1 = v_1 = \frac{1}{d_{11}}; \tag{26}$$

$$\left.\begin{aligned} f_0 &= 1 + 2m_1, \\ f_1 &= \begin{cases} 1 - 2m_1, & (N = 2) \\ 1 - m_1, & (N = 3) \end{cases} \end{aligned}\right\} \tag{27}$$

For the two-spans beam ($N = 2$) and the theee-spans beam ($N = 3$) there is

$$d_{11} = 2 + a + b, \qquad d_{11} = 1 + 5a + b, \tag{28}$$

respectively.

For shear beams with elastic interior supports and for flexure beams with elastic interior supports there is $a = 0$ and $b = 0$, respectively, so that Eqs. (28) simplify.

$$w_1 = \frac{Ql}{K_V} + \frac{5Ql^3}{6K_M}, \quad w_1 = \frac{3Ql}{2K_V} + \frac{9Ql^3}{4K_M}, \tag{29}$$

respectively. They are obtained applying Mohr's formula and superposing the contributions of shear and flexure.

6. FOUR-SPANS AND FIVE-SPANS BEAMS ($n = 2$)

Determinant of the d-matrix:

$$D = d_{11}d_{22} - d_{12}^2. \tag{30}$$

Coefficients of the redundants and the other response quantities:

$$m_1 = \frac{d_{22}}{D}, \quad m_2 = -\frac{d_{12}}{D}; \tag{31}$$

$$v_1 = m_1, \quad v_2 = m_2 - m_1; \tag{32}$$

$$f_0 = 1 + 2m_1,$$

$$f_1 = 1 + m_2 - 2m_1,$$

$$f_2 = \left\{ \begin{array}{ll} 1 - 2m_2 + 2m_1, & (N = 4) \\ 1 - m_2 + m_1. & (N = 5) \end{array} \right\} \tag{33}$$

6.1 Four-spans beam ($N = 4$)

General case

Elements of the d-matrix and its determinant:

$$d_{11} = 6 + 4a + 2b, \quad d_{22} = 3 + 2a + b, \quad d_{12} = -4 + a - b \tag{34}$$

$$D = 2 + 32a + 4b + 7a^2 + 10ab + b^2. \tag{35}$$

Shear beam with elastic interior supports ($a = 0$)

Determinant of the d-matrix: $D = 2 + 4b + b^2$. (36)

Coefficients of the redundants and the other governing response quantities:

$$m_1 = \max v = v_1 = \frac{3+b}{D}, \quad \max m = m_2 = \frac{4+b}{D}; \tag{37}$$

$$f_0 = \frac{8 + 6b + b^2}{D}, \quad \max f = f_2 = bm_2. \tag{38}$$

Flexure beam with elastic interior supports ($b = 0$)

Determinant of the d-matrix: $D = 2 + 32a + 7a^2$. (39)

Coefficients of the redundants an the other governing response quantities:

$$m_1 = \max v = v_1 = \frac{3+2a}{D}, \quad \max m_2 = \frac{4-a}{D}; \tag{40}$$

$$f_0 = \frac{8+36a+7a^2}{D}, \quad \max f = f_2 = a\frac{38+7a}{D}. \tag{41}$$

Simple shear-flexure beam ($a = b = 0$)

Coefficients of the bending moments, the extreme shear force and support actions:

$$m_1 = \max v = v_1 = \frac{3}{2}, \quad \max m = m_2 = 2; \quad f_0 = 4. \tag{42}$$

Maximal displacement:

$$\max w = w_2 = 2\frac{Ql}{K_V} + \frac{41}{12}\frac{Ql^3}{K_M}. \tag{43}$$

6.2 Five-spans beam ($N = 5$)

General case

Elements of the d-matrix and its determinant:

$$d_{11} = 5 + 4a + 2b, \quad d_{22} = 2 + 5a + b, \quad d_{12} = -3 + a - b. \tag{44}$$

$$D = 1 + 39a + 3b + 19a^2 + b^2 + 16ab. \tag{45}$$

Shear beam with elastic interior supports ($a = 0$)

Determinant of the d-matrix: $D = 1 + 3b + b^2$. (46)

Coefficients of the redundants and the other governing response quantities:

$$m_1 = \max v = v_1 = \frac{2+b}{D}, \quad \max m = m_2 = \frac{3+b}{D}; \tag{47}$$

$$f_0 = \frac{5+5b+b^2}{D}, \quad \max f = f_2 = bm_2. \tag{48}$$

Flexure beam with elastic interior supports ($b = 0$)

Determinant of the d-matrix: $D = 1 + 39a + 19a^2$. (49)

Coefficients of the redundants and the other governing response quantities:

$$m_1 = \max v = v_1 = \frac{2+5a}{D}, \quad \max m = m_2 = \frac{3-a}{D}; \tag{50}$$

$$f_0 = \frac{5+49a+19a^2}{D}; \quad \max f = f_2 = a\frac{45+19a}{D}. \tag{51}$$

Simple shear-flexure beam ($a = b = 0$)

Coefficients of the bending moments, the extreme shear force and the support actions:

$$m_1 = \max v = v_1 = 2, \qquad \max m = m_2 = 3; \qquad f_0 = 5. \tag{52}$$

Maximal displacement:

$$\max w = w_2 = 3\frac{Ql}{K_V} + \frac{47}{6}\frac{Ql^3}{K_M}. \tag{53}$$

7. SIX-SPANS AND SEVEN-SPANS BEAMS ($n = 3$)

Because all except the first load term of the compatibility equations' system vanish and, moreover, $d_{31} = d_{13}$, a straightforward solution of the system is possible.

With D_{11}, D_{12} and D_{13} as the minors corresponding to the first row's coefficients d_{11}, d_{12} and d_{13}, respectively, the determinant of the d-matrix is

$$D = d_{11}D_{11} + d_{12}D_{12} + d_{13}D_{13}. \tag{54}$$

Coefficients of the redundants:

$$m_1 = \frac{D_{11}}{D}, \quad m_2 = \frac{D_{12}}{D}, \quad m_3 = \frac{D_{13}}{D}. \tag{55}$$

Coefficients of the other response quantities:

$$v = m_1, \qquad v_2 = m_2 - m_1, \qquad v_3 = m_3 - m_2; \tag{56}$$

$$\left.\begin{aligned} & f_0 = 1 + 2m_1; \\ & f_1 = 1 + m_2 - 2m_1, \qquad f_2 = 1 + m_3 - 2m_2 + m_1, \\ & f_3 = \begin{cases} 1 - 2m_3 + 2m_2, & (N = 6) \\ 1 - m_3 + m_2. & (N = 7) \end{cases} \end{aligned}\right\} \tag{57}$$

7.1 Six-spans beam ($N = 6$)

General case

Elements of the d-matrix, minors of D and D:

$$\begin{aligned} & d_{11} = 5 + 4a + 2b, \quad d_{22} = 7 + 4a + 2b, \quad d_{33} = 3 + 2a + b, \\ & d_{12} = d_{23} = -4 + a - b; \end{aligned} \tag{58}$$

$$D_{11} = d_{22}d_{33} - d_{12}^2, \quad D_{12} = d_{12}(1 - d_{33}), \quad D_{13} = d_{12}^2 - d_{22}; \tag{59}$$

$$D = d_{12}^2(2 - d_{11} - d_{33}) + d_{22}(d_{11}d_{33} - 1). \tag{60}$$

Shear beam with elastic interior supports ($a = 0$)

Determinant of the d-matrix: $D = 2 + 9b + 6b^2 + b^3$. (61)

Coefficients of the redundants and the other governing response quantities:

$$\begin{aligned} & m_1 = \max v = v_1 = \frac{5 + 5b + b^2}{D}, \quad m_2 = \frac{8 + 6b + b^2}{D}, \\ & \max m = m_3 = \frac{9 + 6b + b^2}{D}; \end{aligned} \tag{62}$$

$$f_0 = \frac{12 + 19b + 8b^2 + b^3}{D}, \quad \max f = f_3 = bm_3. \tag{63}$$

Flexure beam with elastic interior supports ($b = 0$)

Determinant of the d-matrix: $D = 2 + 162a + 186a^2 + 26a^3$. (64)

Coefficients of the redundants and the other governing response quantities:

$$m_1 = \max v = v_1 = \frac{5+34a+7a^2}{D}, \quad m_2 = \frac{8+6a-2a^2}{D},$$
$$\max m = m_3 = \frac{9-12a+a^2}{D}; \tag{65}$$

$$\left.\begin{aligned} f_0 &= \frac{12+230a+200a^2+26a^3}{D}; \\ \max f &= f_3 = a\frac{198+180a+26a^2}{D}. \end{aligned}\right\} \tag{66}$$

Simple shear-flexure beam ($a = b = 0$)

Coefficients of the bending moments, the extreme shear force and the support actions:

$$m_1 = \max v = v_1 = \frac{5}{2}, \quad m_2 = 4, \quad \max m = m_3 = \frac{9}{2}; \quad f_0 = 6. \tag{67}$$

Mid-span displacement:

$$\max w = w_3 = \frac{9}{2}\frac{Ql}{K_V} + \frac{211}{12}\frac{Ql^3}{K_M}. \tag{68}$$

7.2 Seven-spans beam ($N = 7$)

General case

Elements of the d-matrix, minors of D and D:

$$d_{11} = 5 + 4a + 2b, \quad d_{22} = 6 + 4a + 2b, \quad d_{33} = 2 + 5a + b,$$
$$d_{12} = -4 + a - b, \quad d_{23} = -3 + a - b; \tag{69}$$

$$D_{11} = d_{22}d_{33} - d_{23}^2, \quad D_{12} = d_{23} - d_{12}d_{33}, \quad D_{13} = d_{12}d_{23} - d_{22}; \tag{70}$$

$$D = (d_{11}d_{22} - d_{12}^2)d_{33} + (2d_{12} - d_{11}d_{23})d_{23} - d_{22}. \tag{71}$$

Shear beam with elastic interior supports ($a = 0$)

Determinant of the d-matrix: $D = 1 + 6b + 5b^2 + b^3$. (72)

Coefficients of the redundants and the other governing response quantities:

$$\left.\begin{aligned} & m_1 = \max v = v_1 = \frac{3+4b+b^2}{D}, \quad m_2 = \frac{5+5b+b^2}{D}, \\ & \max m = m_3 = \frac{6+5b+b^2}{D}, \end{aligned}\right\} \tag{73}$$

$$f_0 = \frac{7+14b+7b^2+b^3}{D}, \quad \max f = f_3 = bm_3. \tag{74}$$

Flexure beam with elastic interior supports ($b = 0$)

Determinant of the d-matrix: $D = 1 + 150a + 311a^2 + 71a^3$. (75)

Coefficients of the redundants and the other governing response quantities:

$$m_1 = \max v = v_1 = \frac{3+44a+19a^2}{D}, \quad m_2 = \frac{5+19a-5a^2}{D}, \tag{76}$$

$$\max m = m_3 = \frac{6-11a+a^2}{D};$$

$$\left.\begin{aligned} & f_0 = \frac{7+238a+349a^2+71a^3}{D}, \\ & \max f = f_3 = a\frac{180+305a+71a^2}{D} \end{aligned}\right\} \tag{77}$$

Simple shear-flexure beam ($a = b = 0$)

Coefficients of the bending moments, the extreme shear force and the supports action:

$$m_1 = \max v = v_1 = 3, \quad m_2 = 5, \quad \max m = m_3 = 6; \quad f_0 = 7. \tag{78}$$

Maximal displacement:

$$\max w = w_3 = 6\frac{Ql}{K_V} + \frac{94}{3}\frac{Ql^3}{K_M}. \tag{79}$$

8. EIGHT-SPANS AND NINE-SPANS BEAMS ($n = 4$)

Elements of the d-matrix:

$$\left.\begin{array}{ll} d_{11} = 5 + 4a + 2b, \quad d_{12} = -4 + a - b, \quad d_{13} = 1, \quad d_{14} = 0; & \\ d_{22} = 6 + 4a + 2b, \quad d_{23} = d_{12}, \quad d_{24} = 1; & \\ d_{33} = 7 + 4a + 2b, \quad d_{34} = d_{12}, \quad d_{44} = 3 + 2a + b; & (N = 8) \\ d_{33} = d_{22}, \quad d_{34} = -3 + a - b, \quad d_{44} = 2 + 5a + 2b. & (N = 9) \end{array}\right\} \quad (80)$$

9. TEN OR MORE SPANS BEAMS ($N \leq 5$)

Elements of the d-matrix:

$$\left.\begin{array}{ll} d_{11} = 5 + 4a + 2b, \quad d_{12} = -4 + a - b, \quad d_{13} = 1, \quad d_{14} = d_{15} = 0; & \\ d_{22} = 6 + 4a + 2b, \quad d_{23} = d_{12}, \quad d_{24} = 1, \quad d_{25} = 0; & \\ d_{jj} = d_{22}, \quad d_{j,j+1} = d_{12}, \quad d_{j,j+2} = 1; & (j = 3..n-2) \\ d_{n-1,n-1} = 7 + 4a + 2b, \quad d_{n-1,n} = d_{12}, \quad d_{nn} = 3 + 2a + b; & (N \text{ even}) \\ d_{n-1,n-1} = d_{22}, \quad d_{n-1,n} = -3 + a - b, \quad d_{nn} = 2 + 5a + b. & (N \text{ odd}) \end{array}\right\} \quad (81)$$

10. APPROXIMATION OF THE SHEAR FLEXURE-BEAM'S RESPONSE BY THAT OF A SHEAR OR A FLEXURE BEAM

In the case the shear stiffness dominates in the response of a shear-flexure beam, the response can be approximated by that of a shear beam by introducing into the analysis instead of K_V^* an equivalent shear stiffness K_V which includes the effect of the flexural deformation. Analogously, when the bending stiffness dominates, the response can be approximated by that of a flexure beam introducing into the analysis instead of K_M^* an equivalent bending stiffness K_M which includes the effect of the shear deformation.

The mid-span displacement of the simple shear-flexure beam due to an uniform lateral load is

$$w_{L/2} = w_{L/2,V} + w_{L/2,M} = \left(\frac{1}{K_V} + \frac{L^2}{9{,}6 K_M} \right) M_{L/2}, \quad (82)$$

where, with q as the load's intensity, $M_{L/2} = qL^2/8$ is its mid-span bending moment.

According to Eq. (82), the mid-span deflections of the shear beam and of the flexure beam can be written down as

$$w_{L/2} = \frac{M_{L/2}}{K_V^*}, \quad w_{L/2} = \frac{M_{L/2} L^2}{9{,}6 K_M^*}, \tag{83}$$

respectively. Herein,

$$K_V^* = \frac{1}{\dfrac{1}{K_V} + \dfrac{L^2}{9{,}6 k_M}}, \quad K_M^* = \frac{1}{\dfrac{1}{K_M} + \dfrac{9{,}6}{K_V L^2}}, \tag{84}$$

are the cross-sectional shear stiffness (force) of the equivalent shear beam, smaller than K_V due to the effect of the flexural deformation, and the cross-sectional bending stiffness (force · length^2) of the equivalent flexure beam, smaller than K_M due to the effect of the shear deformation, respectively.

11. EXAMPLES OF POSSIBLE APPLICATIONS OF THE DEVELOPED THEORY IN BUILDINGS AND CORRESPONDING STIFFNESSES

11.1 Examples

Fig. 2a shows the structure of a flat-roofed building consisting of two gables, double diagonals for example, interior moment-resisting for example two or three hinged frames, or rafters, two vertical longitudinal bracings, two longitudinal edge members or purlins and the decking built-up of corrugated metal sheets spanning in the building's longitudinal direction. – The building represented in Fig. 2b consists of two gables, reinforced concrete or brick walls for example, interior moment-resisting frames or rafters, two vertical longitudinal bracings, longitudinal edge and interior purlins and the decking built-up of corrugated metal sheets spanning in the building's transverse direction. In both examples the roof develops, when laterally loaded by wind or earthquake forces, a stressed-skin diaphragm action. – In the similar building shown in Fig. 2c the roof's diaphragm-action in the building's longitudinal direction is provided by a truss with double diagonals for example. – Notation: N..number of panels, l..length of a panel, L..length of the building, B..width of the building, n..number of frames or rafters on one side of the building's transverse symmetry axis, s..total number of edge and interior purlins, A..cross-sectional area of a purlin (Fig.2a, b) and the chord of the truss (Fig.2c), respectively, h..height of the truss.

Fig. 3 represents a grid consisting of a longitudinal truss with single diagonals for example and transverse simple beams. Again, h denotes the height of the truss, A the cross-sectional area of its chords, whilst the meaning of the other notations corresponds to those of Fig. 2.

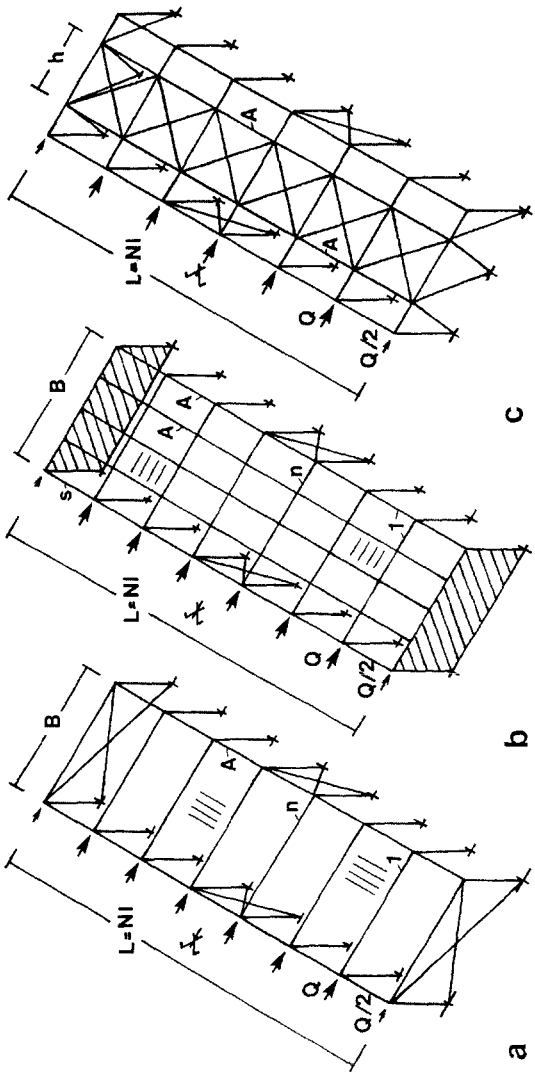

Fig. 2. a) Structure of a flat-roofed building consisting of end gables, transverse frames, vertical longitudinal bracings, edge purlins and a decking built-up of corrugated metal sheets spanning in the building's longitudinal direction. b) Similar structure, the decking of which spans in the building's transverse direction. c) Similar structure in which the roof's longitudinal bracing is provided by a truss

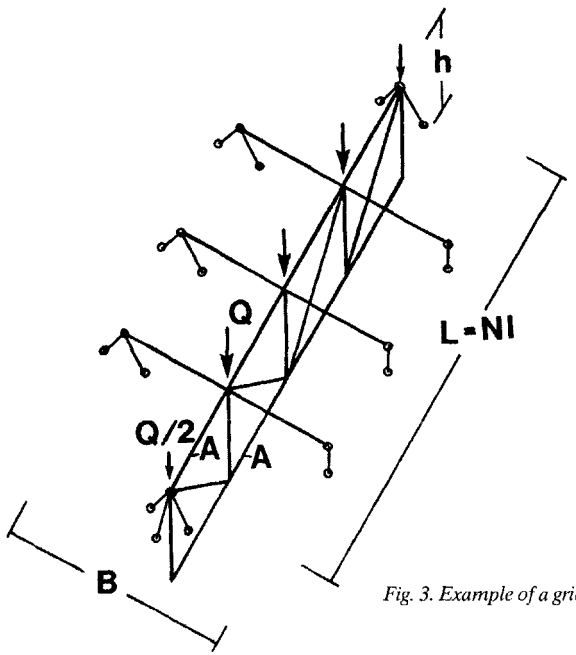

Fig. 3. Example of a grid structure

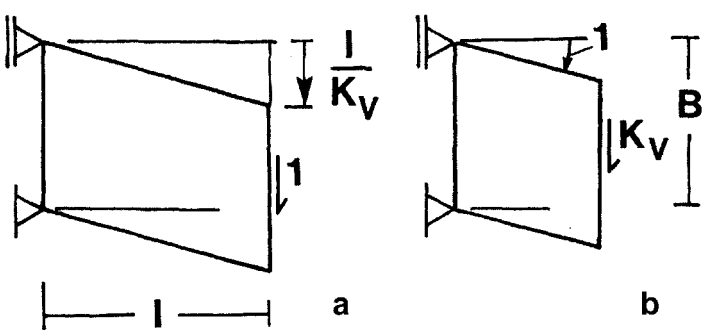

Fig. 4. Definitions of a) a panel's shear deformability and b) the beam's cross-sectional shear stiffness

The structures shown are subjected to lateral loads Q at the interior and $Q/2$ at the outer nodes.

To enable the application of the theory developed in the Chapters 1-10 to problems like those of Figs. 2 and 3, the stiffnesses K_v and K_M of the diaphragm beam must be properly defined.

11.2 Shear stiffnesses of diaphragm beams

Corrugated metal sheets (Fig. 2a, b). The shear deformability $1/K_v$ (length/force) of a corrugated metal sheet panel of length l and height B is defined as the relative displacement of its transverse edges due to an unit shear force (Fig. 4a) and is determined on the basis of the theory of profiled metal sheets and/or experimental investigations. Herewith, the cross-sectional shear stiffness K_v (force) of the beam, i.e. the shear force which produces an unit slope of its deflection line (Fig. 4b), follows to be the l-fold reciprocal value of the named deformability.

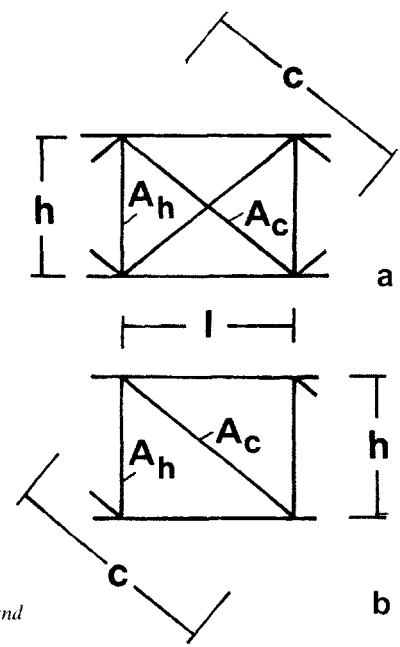

Fig. 5. A panel of trusses with a) double and b) single diagonals

Trusses (Figs. 2c and 3). For trusses with double diagonals (Fig. 5a) and trusses with single diagonals (Fig. 5b) the shear stiffnesses (force) are known [1] to amount

$$K_V = \frac{El}{\dfrac{c^3}{2A_c h^2} + \dfrac{h}{A_h}}, \quad K_V = \frac{El}{\dfrac{c^3}{A_c h^2} + \dfrac{h}{A_h}} \tag{85}$$

respectively. Herein c denotes the length of a diagonal, A_c its cross-sectional area and A_h the cross-sectional area of a cross bar.

11.3 Bending stiffnesses of diaphragm-beams

Systems according to Figs. 2a, c and 3. The moments of inertia of these systems are due to the two chords and thus amount

$$I = \frac{AB^2}{2}, \quad I = \frac{Ah^2}{2}, \tag{86}$$

respectively. With respect to the system according to Fig. 2c it is assumed, that its two longitudinal edge purlins are unable to transfer axial forces.

System according to Fig. 2b. Fig. 6 shows schematically the active cross section of the beam. Its eigen-moment of inertia can be formulated as

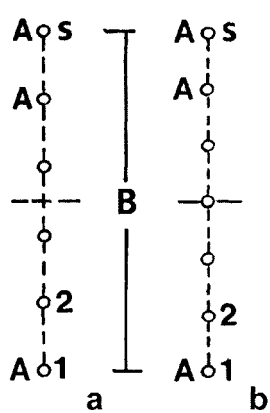

Fig. 6. Effective cross-sections of beams consisting of an a) even and b) odd number of purlins

$$I = \alpha \frac{AB^2}{2}, \tag{87}$$

where

$$\alpha = \frac{s(s+1)}{6(s-1)} \tag{88}$$

is a dimensionless coefficient which introduces into the analysis the contribution of the interior purlins. When deriving Eqs. (87) and (88) the normal stress distribution along the beam's height was assumed as linear and the contribution of the eigen-moments of inertia of the individual purlins neglected because it is nil compared with their Steiner-contribution.

11.4 Stiffnesses of transverse frames and beams

The stiffness, C (force/length), of the transverse for example two hinged frames (Figs. 2 and 7a) and beams (Figs. 3 and 7b) is defined as the force which produces an unit displacement of its application point in the direction of the force and can be determined by any elementary method of the theory of structures or found in a corresponding handbook.

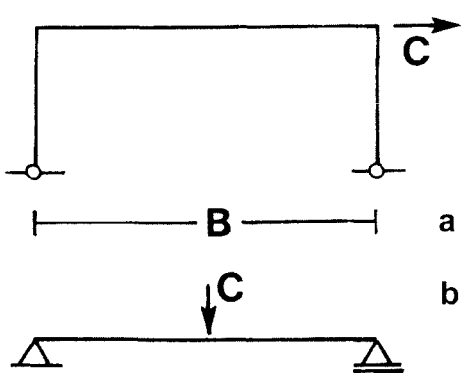

Fig. 7. Definitions of the stiffnesses of a a) two-hinged frame and b) simple beam

12. NUMERICAL EXAMPLE OF A BUILDING WITH A STRESSED-SKIN ROOF BRACING

A structure according to Fig. 2a is dealt with.

Data. Length of the building: L = 35 m. Number of panels: N = 7. Width of the building: B = 20 m. Cross-sectional shear and bending stiffnesses of the roof's diaphragm-beam: K_V = 67,0 MN, K_M = 41,4 GNm^2. Stiffness of the transverse moment-resisting frames: C = 378,8 kN/m. Lateral loads: Q = 12,25 kN.

To enable possible accuracy comparisons with other methods, a larger number of digits is used in the analysis as necessary for engineering purposes.

Panels' span and reference values of the response quantities: l = 5m, Ql = 61,25 kNm, Q/C = 32,339 mm.

System's stiffness parameters (Eqs. (3)): a = 0,00019062, b = 0,028269.

12.1 General case of the shear-flexure roof beam and laterally stiff frames

Elements of the d-matrix, minors of its determinant and determinant (Eqs. (69)-(71)): d_{11} = 5,0573, d_{22} = 6,0573, d_{33} = 2,0292, d_{12} = – 4,0281, d_{23} = – 3,0281; D_{11} = 3,1221, D_{12} = 5,1457, D_{13}=6,1402; D = 1,2020.

Coefficients of the response quantities (Eqs. (55) – (57)); m_1 = 2,5974, m_2 = 4,2809, m_3 = 5,1082; v_1 = 2,5974, v_2 = 1,6835, v_3 = 0,8273; f_0 = 6,1948, f_1 = 0,0861, f_2 = 0,1438, f_3 = 0,1727.

Beam's bending moments, shear forces, support actions and displacements are obtained multiplying the corresponding coefficient by the corresponding reference value (Eqs. (17), (18), (20) and (22)); they are listed in the SFC column of the Table 1.

12.2 Limit case of the shear roof beam and laterally stiff transverse frames (a = 0)

Determinant of the d-matrix (Eq. (72)): D = 1,1736.

Coefficients of the response quantities (Egs.(73), (74)); m_1 = 2,6532, m_2 = 4,3814, m_3 = 5,2335; v_1 = 2,6532, v_2 = 1,7282, v_3 = 0,8521; f_0 = 6,3064, f_1 = 0,07500, f_2 = 0,12386, f_3 = 0,14794.

Beam's response quantities are obtained multiplying the corresponding coefficient by the corresponding reference value; they are listed in the SOC column of the Table 1.

12.3 Limit case of the flexure roof beam and laterally stiff transverse frames (b = 0)

Determinant of the d-matrix (Eq. (75)): D = 1,0286.

Coefficients of the response quantities (Egs.(76), (77)): m_1= 2,9247, m_2 = 4,8645, m_3 = 5,8311; v_1 = 2,9247, v_2 = 1,9398, v_3 = 0,9666; f_0 = 6,8495, f_1 = 0,01504, f_2 = 0,02683, f_3 = 0,03340.

System's response quantities are obtained multiplying the corresponding coefficient by the corresponding reference value; they are listed in the OFC column of the Table.

12.4 Limit case of the simple shear-flexure roof beam ($a = b = 0$)

Coefficients of the beam's bending moments, shear forces and support actions (Egs.(78)): $m_1 = 3, m_2 = 5, m_3 = 6$; $\nu_1 = 3, \nu_2 = 2, \nu_3 = 1$; $f_0 = 7$.

Beam's bending moments and shear forces and the support actions are obtained multiplying the corresponding coefficient by the corresponding reference value (Egs.(17), (18) and (20)), the maximal displacement using Eq.(79); they are listed in the SFO column of the Table.

12.5 Case of the equivalent shear roof beam and laterally stiff transverse frames ($a = 0$)

Equivalent shear stiffness (1st Eq. (84)): $K_V^* = 55{,}532$ MN.
Stiffness parameter (2nd Eq.(3)): $b = 0{,}034107$.
Determinant of the d-matrix (Eq. (72)): $D = 1{,}2105$.

Table 1. Response quantities of the 1st numerical example

	SFC	SOC	OFC	SFO	ESC	
M_1	159	163	179	184	159	
M_2	262	268	298	306	262	kNm
max $M = M_3$	312	321	357	368	312	
max $V = V_1$	31,8	32,5	35,8	36,8	31,8	
V_2	20,6	21,2	23,8	24,5	20,6	
V_3	10,1	10,4	11,8	12,3	10,1	
F_0	37,9	38,6	42,0	42,9	37,9	
F_1	1,07	0,92	0,184	0	1,08	kN
F_2	1,79	1,52	0,329	0	1,78	
max $F = F_3$	2,13	1,81	0,409	0	2,13	
ΣF_j	4,99	4,25	0,922	0	4,99	
$F_o + \Sigma F_j$	42,9	42,9	42,9	42,9	42,9	
w_1	2,82	2,43	0,486	3,24	2,86	
w_2	4,72	4,01	0,868	5,48	4,71	mm
max $w = w_3$	5,62	4,78	1,080	6,64	5,62	

Coefficients of the response quantities (Egs.(73), (74)): $m_1 = 2{,}5920, m_2 = 4{,}2724, m_3 = 5{,}0985; v_1 = 2{,}5920, v_2 = 1{,}6804, v_3 = 0{,}8261; f_0 = 6{,}1840, f_1 = 0{,}0884, f_2 = 0{,}1457, f_3 = 0{,}1739$.

System's response quantities are obtained multiplying the corresponding coefficient by the corresponding reference value; they are listed in the ESC column of the Table 1.

12.6 Discussion of the results

The comparison of the results of the exact analysis (Table's 1 column SFC) with those of the approximate analyses (columns SOC and OFC) confirms, as expected, that the roof's diaphragm develops dominantly a shear-beam behaviour. When the diaphragm's response is approximated by that of a shear beam (column SOC), somewhat too large bending moments and shear forces, a too large end-support's action, but too small interior supports' actions and displacements are obtained. When the diaphragm's response is approximated by that of a flexure beam (column OFC), again too large bending moments and shear forces and a too large end-support's action are obtained, but the deviations are now appreciably greater; the results for the interior supports' actions and displacements are so much too small that they are unusable.

The results of the equivalent shear-beam approach (column ESC) do, within the three digits presenting the results, not deviate from those of the exact analysis.

The comparison of the end-support's action (row F_0), the sum of the interior supports' actions (row ΣF_j) and a half of the structure's load (row $F_0 + \Sigma F_j$) shows, that the larger part of the building's load is by the roof's diaphragm action transferred to the gables, whilst the interior transverse frames take only a minor part of the load.

Would the frames have no lateral stiffness at all (column SFO),would they consist, for example, of columns hinged onto their footings and rafters hinged onto the columns, the roof-diaphragm's bending moments, shear forces and displacements would, nevertheless, be appreciably larger.

The comparison of the analyses' procedures shows, that the effort necessary for the exact analysis is only insignificantly larger than that necessary for any of the approximate procedures.

13. NUMERICAL EXAMPLE OF A BUILDING WITH A TRUSS ROOF BRACING

A structure according to Fig. 2c is dealt with.

Data. Length of the building: $L = 42$ m. Number of panels: $N = 6$. Width of the building: $B = 15$ m. Cross-sectional shear and bending stiffnesses of the roof's diaphragm-

beam: $K_V = 581$ MN, $K_M = 8{,}21$ GNm^2. Stiffness of the transverse moment-resisting frames: $C = 347$ kN/m. Lateral loads: $Q = 34{,}3$ kN. – When determining K_V the effects of the compressed diagonals and of the transverse frames' lintels are neglected because they are nil compared with those of the diagonals subjected to tension.

Again, a larger number of digits is used in the analysis as necessary for engineering purposes to enable possible accuracy comparisons with other methods.

Panels' span and reference values of the response quantities: $l = 7$ m, $Ql = 240{,}1$ kNm, $Q/C = 98{,}85$ mm.

System's stiffness parameters (Eqs. 3)): $a = 0{,}0024162$, $b = 0{,}0041807$.

13.1 General case of the shear-flexure roof beam and laterally stiff frames

Elements of the d-matrix, minores of its determinant and determinant (Egs.(58)-(60)): $d_{11} = 5{,}0180$, $d_{22} = 7{,}0180$, $d_{33} = 3{,}0090$, $d_{12} = d_{23} = -4{,}0018$; $D_{11} = 5{,}1032$, $D_{12} = 8{,}0396$, $D_{13} = 8{,}9961$; $D = 2{,}4319$.

Coefficients of the response quantities (Egs.(55)-(57)): $m_1 = 2{,}0985$, $m_2 = 3{,}3059$, $m_3 = 3{,}6993$; $v_1 = 2{,}0985$, $v_2 = 1{,}2075$, $v_3 = 0{,}39331$; $f_0 = 5{,}1970$, $f_1 = 1{,}0896$, $f_2 = 0{,}18586$, $f_3 = 0{,}21338$.

Beam's bending moments, shear forces, support actions and displacements are obtained multiplying the corresponding coefficient by the corresponding reference value (Egs.(17), (18), (20) and (22)); they are listed in the SFC column of the Table 2.

13.2 Limit case of the shear roof beam and laterally stiff transverse frames ($a = 0$)

Determinant of the d-matrix (Eq.(60)); $D = 2{,}0377$.

Coefficients of the response quantities (Egs.(62)-(63)): $m_1 = 2{,}4640$, $m_2 = 3{,}9383$, $m_3 = 4{,}4290$; $v_1 = 2{,}4640$, $v_2 = 1{,}4743$, $v_3 = 0{,}49074$; $f_0 = 5{,}9280$, $f_1 = 0{,}010290$, $f_2 = 0{,}016470$, $f_3 = 0{,}018520$.

Beam's response quantities are obtained multiplying the corresponding coefficient by the corresponding reference value; they are listed in the SOC column of the Table 2.

13.3 Limit case of the flexure roof beam and laterally stiff transverse frames ($b = 0$)

Determinant of the d-matrix (Eq.(64)): $D = 2{,}3925$.

Coefficients of the response quantities (Egs.(55)-(57)): $m_1 = 2{,}1242$, $m_2 = 3{,}3498$, $m_3 = 3{,}7496$; $v_1 = 2{,}1242$, $v_2 = 1{,}2256$, $v_3 = 0{,}39980$; $f_0 = 5{,}2484$, $f_1 = 0{,}10141$, $f_2 = 0{,}17418$, $f_3 = 0{,}20040$.

Beam's response quantities are obtained multiplying the corresponding coefficient by the corresponding reference value; they are listed in the OFC column of the Table 2.

13.4 Limit case of the simple shear-flexure roof beam ($a = b = 0$)

Coefficients of the beam's bending moments, shear forces and support actions (Eqs. (67)); $m_1 = 2{,}5$, $m_2 = 4$, $m_3 = 4{,}5$; $v_1 = 2{,}5$, $v_2 = 1{,}5$, $v_3 = 0{,}5$; $f_0 = 6$.

Beam's bending moments and shear forces and the support actions are obtained multiplying the corresponding coefficient by the corresponding reference value (Eqs. (17), (18) and (20)), the maximal displacement using Eq.(68); they are listed in the SFO column of the Table 2.

13.5 Case of the equivalent flexure roof beam and laterally stiff transverse frames ($b = 0$)

Equivalent flexure stiffness (2nd Eq.(84)): $K_M^* = 7{,}624$ GNm^2. Stiffness parameter (1st Eq. (3)): $a = 0{,}0026019$.

Determinant of the d-matrix (Eq.(64)); $D = 2{,}4228$.

Table 2. Response quantities of the 2nd numerical example

	SFC	SOC	OFC	SFO	EFC	
M_1	504	592	510	600	504	
M_2	794	946	804	960	794	kNm
$\max M = M_3$	888	1063	900	1080	888	
$\max V = V_1$	72,0	84,5	72,9	85,8	72,0	
V_2	41,4	50,6	42,0	51,5	41,4	
V_3	13,5	16,8	13,7	17,2	13,5	
F_0	89,1	102	90,0	103	89,2	
F_1	3,74	0,353	3,48	0	3,70	kN
F_2	6,38	0,565	5,97	0	6,36	
$\max F = F_3$	7,32	0,626	6,87	0	7,31	
ΣF_j	13,8	1,23	12,9	0	13,7	
$F_0 + \Sigma F_j$	103	103	103	103	103	
w_1	10,8	1,02	10,0	13,0	10,7	
w_2	18,4	1,63	17,2	22,8	18,3	mm
$\max w = w_3$	21,1	1,83	19,8	27,1	21,1	

Coefficients of the response quantities (Egs.(65), (66)): $m_1 = 2{,}1003, m_2 = 3{,}3084$, $m_3 = 3{,}7019$; $v_1 = 2{,}1003$, $v_2 = 1{,}2082$, $v_3 = 0{,}39343$; $f_0 = 5{,}2006$, $f_1 = 0{,}10786$, $f_2 = 0{,}18528$, $f_3 = 0{,}21314$. Beam's response quantities are obtained multiplying the corresponding coefficient by the corresponding reference value; they are listed in the EFC column of the Table 2.

13.6 Discussion of the results

The comparison of the results of the exact analysis (Table's 2 column SFC) with those of the approximate analyses (columns SOC and OFC) confirms, as expected, that the roof's diaphragm develops dominantly a flexure beam behaviour. When the diaphragm's response is approximated by that of a flexure beam (column OFC), somewhat too large bending moments and shear forces, a too large end-supports' action and displacements are obtained. When the diaphragm's response is approximated by that of a shear beam (column SOC), again too large bending moments and shear forces and a too large supports' action are obtained, but the deviations are now appreciably larger; the results for the interior supports' actions and displacements are so much too small that they are unusable.

The results of the equivalent flexure beam approach (column EFC) do, within the three digits presenting the results, practically not deviate from those of the exact analysis.

The comparison of the end-support's action (row F_0), the sum of the interior support's actions (row $\Sigma F_j = F_1 + F_2 + F_3/2$) and a half of the structure's load ($F_0 + \Sigma F_j$) shows, that the larger part of the building's load is by the roof's diaphragm action transferred to the gables, whilst the interior transverse frames take only a minor part of the load.

Would the frames have no lateral stiffness at all (column SFO), would they consist, for example, of columns hinged onto their footings and rafters hinged onto the columns, the roof-diaphragm's bending moments, shear forces and displacements would, nevertheless, be appreciably larger.

Again, the comparison of the analyses' procedures shows, that the effort necessary for the exact analysis is only insignificantly larger than that necessary for any of the approximate procedures.

14. CONCLUSION

A simple method, suitable also for hand computations, is developed for the determination of the response quantities of a beam with hinged laterally fix end supports, laterally elastic interior supports and subjected to lateral loads at its nodes. It is assumed that both the beam's shear and bending deformabilities appreciably contribute to their response quantities. Hence, the method is a generalization of the corresponding method for the ordinary, i.e. flexure beam. The system's geometric and stiffness properties are assumed as constant along its length.

For up to seven-span beams closed-form solutions are derived for the beam's bending moments at the interior supports and herewith its shear forces, displacements and support actions. For systems with eight and more spans formulas for the coefficients and load terms of the compatibility equations are given, so that the response quantities can easily be obtained by solving a system of linear algebraic equations whose coefficients form a five-termed band matrix; the number of redundants is equal to the number of interior supports on one side of the system's symmetry axis.

The principle of the system's minimum complementary energy is applied to derive the governing equations and two system's dimensionles stiffness parameters are introduced to obtain simple formulations suitable for practical design purposes. The general solution includes, as limit or special cases, the solutions for the shear beam with interior elastic supports, the flexure beam with interior elastic supports and the simple shear-flexure beam, i.e. the statically determinate beam without interior supports.

Applications revealed, that the effort necessary for the exact solution is only insignificantly larger than that necessary for any of the approximate solutions. Hence it is suggested to use the exact solution whenever the relative effects of the beam's shear behavior and flexural behavior onto its response cannot be reliably estimated in advance.

The elaboration of the developed theory was initiated by the need of a general analysis method for flat-roofed buildings consisting of laterally rigid gables, laterally weaker transverse frames and a roof diaphragm in the form of either a stressed-skin decking or a truss which transmits a part of the building's lateral load to the gables, whilst the rest of the load is resisted by the frames. – The two limit or special cases of the considered system, namely those with the shear roof diaphragm and the flexure roof diaphragm, respectively, were already dealt with, the former by Davies and Bryan [2] and the author [3, 4], the latter by the author [5].

Further it is shown, that the developed theory can also be used for investigations of other spatial structures, grids for example.

Due to the large number of involved parameters it is impossible to make parametric studies. Two numerical examples of typical flatroofed buildings with a stressed-skin and a truss diaphragm, respectively, illustrate the practical application of the developed analyses. Both the general procedure and its special cases are dealt with and the results compared. The discussion of the results points out the effect of the system's parameters onto its response.

References

[1] Petersen, C.: Statik und Stabilität der Baukonstruktionen. Vieweg & Sohn, Braunschweig, 1982.

[2] Davies, J.M. and Bryan, E.R.: Manual of Stressed Skin Diaphragm Design. Granada, London, 1982.

[3] Rosman, R.: Statics of the Shear Beam on an Elastic Foundation. Proceedings of the 3rd International Congress of Croatian Society of Mechanics, 239-244, Croatian Society of Mechanics, Zagreb, 2000.

[4] Rosman, R.: Tragverhalten des Trapezprofildachverband-Rahmen-Wände-Systems typischer Hallen. Stahlbau 70 (2001), 464-473.

[5] Rosman, R.: Tragverhalten des Dachverband-Rahmen-Wände-Systems typischer Hallen. Stahlbau 67 (1998), 926-935.

APPENDIX

DIRECT ANALYSIS OF THE SIMPLE SHEAR-FLEXURE BEAM

In the Sections 5-7 the bending moments and shear forces of simple shear-flexure beams with two to seven spans are obtained as a limit case of the corresponding beam with additional interior elastic supports, whilst the maximum displacements are listed without derivation.

In the following, as the beam is statically determinate, its internal forces are obtained on the basis of elementary statics, its displacements applying Mohr's formula, i.e. according to

$$w_j = w_{j,V} + w_{j,M} = \int_{L/2} \frac{V\overline{V}_j}{K_V} dx + \int_{L/2} \frac{M\overline{M}_j}{K_M} dx. \tag{89}$$

Herein V and M are the beam's shear force and bending moment, respectively, due to the considered loading, $\overline{V}_j$ and $\overline{M}_j$ its shear force and bending moment, respectively, due to a virtual unit force at the node j where the displacement is to be determined.

Fig. 8 shows one half of the two-spans beam ($N = 2$), its load and the corresponding shear-force and bending-moment diagrams and the shear-force and bending-moment diagrams due to the virtual unit force at the node 1. Combining the V and $\overline{V}_1$ diagrams and the M and $\overline{M}_1$ diagrams, the contributions of shear and flexure to the beam's mid-span displacement, and herewith their sum, are easily found to be

Fig. 8. One half of the simple two-spans shear-flexure beam with the load, the corresponding shear-force diagram V and bending-moment diagram M and the shear-force and bending-moment diagrams due to a virtual unit force at the node 1

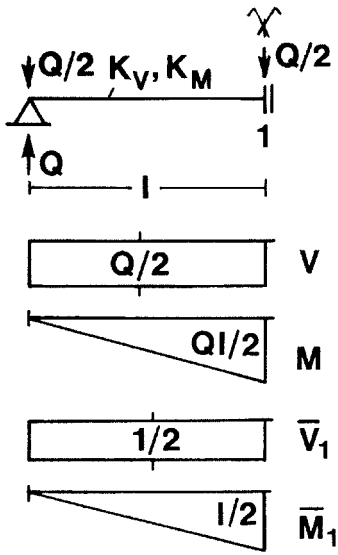

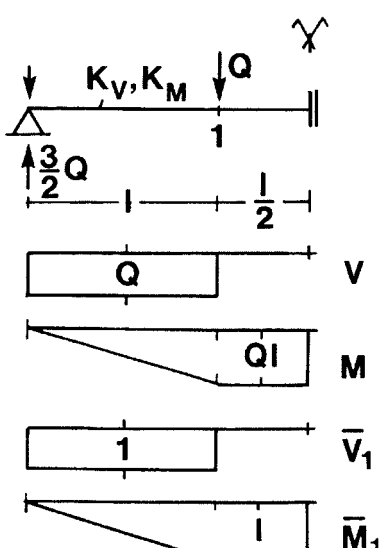

Fig. 9. One half of the simple three-spans shear-flexure beam with the load, the corresponding shear-force diagram V and bending-moment diagram M and the shear-force and bending-moment diagrams due to a virtual unit force at the node 1

$$w_1 = \frac{1}{4}\frac{Ql}{K_V} + \frac{1}{12}\frac{Ql^3}{K_M}. \tag{90}$$

Fig. 9 refers to the three-spans beam ($N = 3$); the displacement at the node 1 is

$$w_1 = \frac{Ql}{K_V} + \frac{5}{6}\frac{Ql^3}{K_M}. \tag{91}$$

For the four-spans beam ($N = 4$) Fig. 10 gives the V and M diagrams due to the load and the $\overline{V}_1$ and $\overline{M}_1$ and the $\overline{V}_2$ and $\overline{M}_2$ diagrams due to a virtual unit force at the nodes 1 and 2, respectively. The displacements follow to be

$$w_1 = \frac{3}{2}\frac{Ql}{K_V} + \frac{9}{4}\frac{Ql^3}{K_M}, \quad w_2 = 2\frac{Ql}{K_V} + \frac{41}{12} + \frac{Ql^3}{K_M}. \tag{92}$$

For the five-spans beam ($N = 5$) Fig. 11 holds and the displacements are

$$w_1 = 2\frac{Ql}{K_V} + 4\frac{Ql^3}{K_M}, \quad w_2 = 3\frac{Ql}{K_V} + \frac{47}{6}\frac{Ql^3}{K_M}. \tag{93}$$

Analogously, for the six-spans beam ($N = 6$) Fig. 12 gives the shear-force and bending-moment diagrams due to the load and a virtual unit force at the nodes 1, 2 and 3, respectively, so that the displacements amount

$$\left.\begin{aligned} w_1 &= \frac{5}{2}\frac{Ql}{K_V} + \frac{25}{3}\frac{Ql^3}{K_M}, \quad w_2 = 4\frac{Ql}{K_V} + \frac{177}{12}\frac{Ql^3}{K_M}, \\ w_3 &= \frac{9}{2}\frac{Ql}{K_V} + \frac{211}{12}\frac{Ql^3}{K_M}. \end{aligned}\right\} \tag{94}$$

Fig. 13 refers to the seven-spans beam ($N = 7$) and the displacements are

$$\left.\begin{aligned} w_1 &= 3\frac{Ql}{K_V} + \frac{27}{2}\frac{Ql^3}{K_M}, \quad w_2 = 5\frac{Ql}{K_V} + \frac{74}{3}\frac{Ql^3}{K_M}, \\ w_3 &= 6\frac{Ql}{K_V} + \frac{94}{3}\frac{Ql^3}{K_M}. \end{aligned}\right\} \tag{95}$$

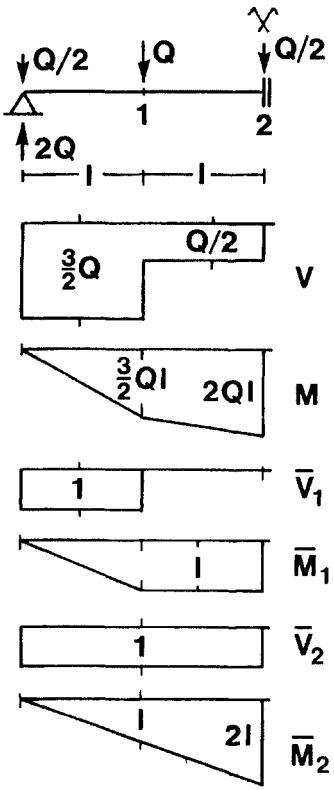

Fig. 10. One half of the simple four-spans shear-flexure beam with the load, the corresponding shear-force diagram V and bending-moment diagram M and the shear-force and bending-moment diagrams due to a virtual unit force at the nodes 1 and 2, respectively

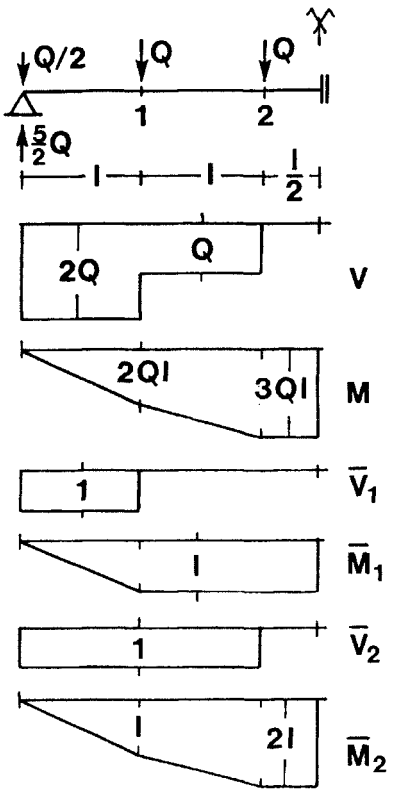

Fig. 11. One half of the simple five-spans shear-flexure beam with the load, the corresponding shear-force diagram V and bending-moment diagram M and the shear-force and bending-moment diagrams due to a virtual unit force at the nodes 1 and 2, respectively

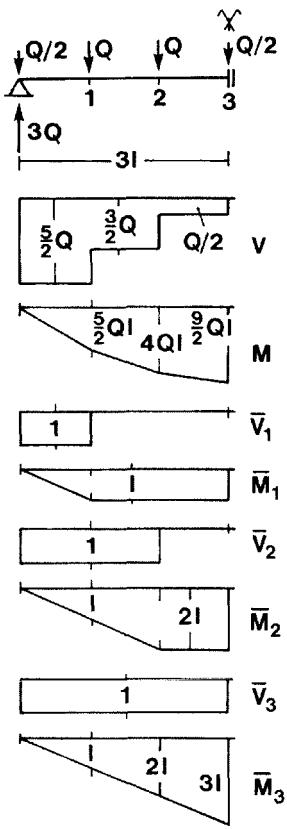

Fig. 12. One half of the simple six-spans shear-flexure beam with the load, the corresponding shear-force diagram V and bending-moment diagram M and the shear-force and bending-moment diagrams due to a virtual unit force at the nodes 1, 2 and 3, respectively

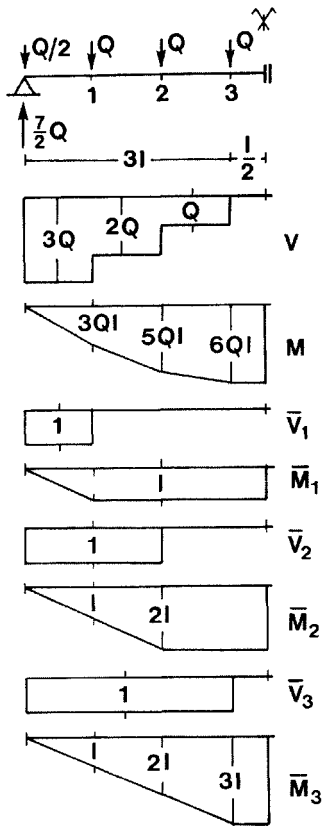

Fig. 13. One half of the simple seven-spans shear-flexure beam with the load, the corresponding shear-force diagram V and bending-moment diagram M and the shear-force and bending-moment diagrams due to a virtual unit force at the nodes 1, 2 and 3, respectively

Beams with more than seven spans are dealt with analogously.

Numerical example. Dealt with is a flat-roofed building, similar to that analyzed in Section 12.4, consisting of laterally rigid gable walls, six frames built up of a rafter hinged onto the columns and two columns hinged onto their footing and a stressed-skin roof decking made of corrugated metal sheets. Data: $L = 35$ m, $N = 7$, $B = 20$ m, $K_V = 54{,}98$ MN, $K_M = 41{,}4$ GNm^2, $Q = 12{,}25$ kN.

According to Fig. 13 there is

$M_1 = 184$ kNm, $M_2 = 306$ kNm, $M_3 = 368$ kNm;

$V_1 = 36{,}8$ kN, $V_2 = 24{,}5$ kN, $V_3 = 12{,}3$ kN; $F_0 = 42{,}9$ kN;

$w_1 = 2{,}743+0{,}499 = 3{,}24$ mm, $w_2 = 4{,}571 + 0{,}912 = 5{,}48$ mm,

$w_3 = 5{,}485 + 1{,}159 = 6{,}64$ mm.

Obviously, the M and V values do not depend on the beam's stiffnesses. The comparison of the first and the second contribution to the w-values shows the relative importance of the beam's shear and bending stiffnesses.

SAŽETAK

Statika bočno opterećene posmično-savojne grede sa zglobnim krajnjim i elastičnim unutarnjim ležajima

Primjenom principa o minimumu komplementarne energije razrađen je jednostavan postupak utvrđivanja odzivnih veličina posmično-savojne grede sa zglobnim bočno nepomičnim krajnjim ležajima i bočno elastičnim međuležajima izložene bočnim silama u čvorovima. Za grede sa do sedam polja izvedeni su konačni obrasci za odzivne veličine, a za grede sa osam i više polja izrazi za koeficijente i apsolutne članove sustava jednadžbi kompatibilnosti, pa se odzivne veličine mogu lako odrediti. – Opći postupak sadrži, kao granične posebne slučaje, rješenja za posmičnu gredu s elastičnim ležajima, savojnu gredu s elastičnim ležajima i prostu posmično-savojnu gredu bez unutarnjih ležaja.

Praktična primjena razrađene metode pokazana je na dijafragmama ravnih krovova od profiliranih limova ili uzdužnih rešetki te roštiljnim konstrukcijama. Izvedeni su obrasci za odnosne krutosti. Brojčani primjer jedne tipične industrijske hale ilustrira kako opću tako i posebne metode, a diskusija rezultata ukazuje na utjecaje parametara sustava na odzivne veličine.

Člankom želi se doprinijeti lakšem dizajnu kao i preliminarnoj i konačnoj analizi nekih racionalnih prostornih konstrukcija zgradarstva.

Ključne riječi: *posmično-savojna greda, bočno opterećenje, odzivne veličine, statika, komplementarna energija, savojna greda, posmična greda*

Izdavač: HRVATSKA AKADEMIJA ZNANOSTI I UMJETNOSTI, Zrinski trg 11, 10000 Zagreb
Za izdavača: akademik Slavko Cvetnić; *Tehnički urednik:* Ranko Muhek
Naklada: 350 primjeraka; *Tisak:* Z i B Mladost