UDK 51
DOI 10.21857/94kl4cw3zm

ISSN 1849-2215 (Online)
ISSN 1845-4100 (Print)

R A D

HRVATSKE AKADEMIJE
ZNANOSTI I UMJETNOSTI

558

MATEMATIČKE ZNANOSTI
28

ZAGREB, 2024.

RAD HRVATSKE AKADEMIJE ZNANOSTI I UMJETNOSTI
KNJIGA 558

RAZRED ZA MATEMATIČKE, FIZIČKE I KEMIJSKE ZNANOSTI
KNJIGA LXIII

MATEMATIČKE ZNANOSTI 28

Glavni urednik / Editor-in-Chief
Andrej Dujella

Uredništvo / Editorial Board
Ibrahim Aganović
Žarko Dadić
Goran Muić
Josip Pečarić
Mirko Primc
Marko Tadić
Vladimir Volenec
Zoran Vondraček

Tajnik uredništva / Editorial Board Secretary
Filip Najman

HRVATSKA AKADEMIJA ZNANOSTI I UMJETNOSTI

UDK 51
DOI 10.21857/94kl4cw3zm

ISSN 1849-2215 (Online)
ISSN 1845-4100 (Print)

RAD

HRVATSKE AKADEMIJE ZNANOSTI I UMJETNOSTI

558

MATEMATIČKE ZNANOSTI

SVEZAK 28



ZAGREB 2024

Objavljeno potporom Ministarstva znanosti i obrazovanja Republike Hrvatske.
Published by the support of Ministry of Science and Education of the Republic of Croatia.

Contents

3 ***N. Grbac and M. Hanzer***
The Tadić philosophy: an overview of the guiding principles and underlying ideas in the work of Marko Tadić

49 ***M. Primc***
New partition identities for odd W odd

57 ***D. Mikoč and G. Muić***
On Higher Order Weierstrass Points on $X_0(N)$

71 ***N. Grbac***
Endoscopic transfer and automorphic L-functions: The case of the general spin group and the twisted symmetric and exterior square L-functions

93 ***H. Grobner and N. Matringe***
On the non-vanishing of Shalika newvectors at the identity

107 ***B. Liu, C.-H. Lo and F. Shahidi***
Jiang's conjecture and Fibers of the Barbasch-Vogan duality

131 ***J. Schwermer***
A note on boundary components of arithmetic quotients of the group SL_2 over an algebraic number field

151 ***G. Henniart and M. Oi***
On Swan exponents of symmetric and exterior square Galois representations

185 ***A. Dujella and J. C. Peral***
An elliptic curve over $\mathbb{Q}(u)$ with torsion $\mathbb{Z}/4\mathbb{Z}$ and rank 6

193 ***P. Bakić, W.T. Gan and G. Savin***
Similitude exceptional theta correspondences

223 ***B. Širola***
On prime elements in commutative domains

245 ***H. Kraljević***
Weird K-actions on $\mathcal{U}(\mathfrak{g})$ for $\mathfrak{so}(n,1)$ and $\mathfrak{su}(n,1)$

259 ***D. Adamović and A.Milas***
Logarithmic vertex algebras related to $\mathfrak{sp}(4)$

283 ***I. Matić***
On reducibility of representations induced from the essentially Speh representations and discrete series

327 ***P. Pandžić and A. Prlić***
Sharpening the Dirac inequality

339 ***J.-S. Huang and Y. Zhao***
On bases of $\mathfrak{g}$-invariant endomorphism algebras

353 ***C. Moeglin and D. Renard***
Séries discrètes des espaces symétriques et paquets d'Arthur

405 ***D. Ban***
Jacquet tensors

425 ***A. Moy and G. Savin***
Bernstein projector of Coxeter depth

RAD HAZU. MATEMATIČKE ZNANOSTI 28 = 558 (2024)

Happy 70-th birthday professor Marko Tadić



This issue of Rad HAZU is dedicated to professor Marko Tadić, a full member of Croatian Academy of Sciences. Professor Tadić was born on November 16, 1953 in Kolo (near the town of Tomislavgrad, Bosnia and Herzegovina). He graduated mathematics at the University of Zagreb in 1976, and finished his Ph.D. thesis in 1980 at the University of Zagreb under supervision of professor Dragan Miličić. He has been professor at the Department of Mathematics, Faculty of Sciences, University of Zagreb for all of his career. Professor Tadić has been visiting and lecturing at many universities and institutes including the very prestigious University of Chicago, Université Paris 7, Max-Planck-Institute für Mathematik (Bonn), University of Utah, Sonderforschungsbereich 170, Geometrie und Analysis (Göttingen), Mathematisches Institut Der Universität Münster, The Hong Kong University of Science and Technology, Institute of Mathematical Sciences (Singapore), Hebrew University (Jerusalem), Mathematical Institute in Oberwolfach, Weizmann Institute of Science (Rehovot), Erwin Schrödinger International Institute for Mathematical Physics (Vienna) etc.

Professor Tadić is world renowned leading expert in representation theory of reductive p–adic groups and Langlands programme. The paper of Hanzer and Grbac *"The Tadić philosophy: an overview of the guiding principles and underlying ideas in the work of Marko Tadić"* in this issue describes his works in detail. We mention here two key results. Firstly, one of his early

fundamental contributions is the classification of unitary irreducible complex representations of the p-adic general linear group $GL(n)$. That was published in 1986. The result at that time was really surprising and deep (methods even apply to real and complex $GL(n)$). It has been in use ever since with major applications in various problems in the Langlands programme, such as, for example, the very recent deep works of Arthur. Secondly, since the nineties of the last century, the main line of research in the Langlands programme has been concentrated on classical groups. Because of that, professor Tadić had turned his attention to the problems of the classification of irreducible representations of classical p–adic groups. The problems in this case are much more difficult than for $GL(n)$, and developing his method of Jacquet modules he was able to achieve a lot. We would like to mention here that he was able to achieve, jointly with C. Mœglin, very elegant, complete and explicit construction of discrete series for classical groups which are cornerstones of the classification of all irreducible representations.

The impact of professor Tadić in developing a world class research in mathematics in Croatia is invaluable. He was encouraging and supporting development of research in representation theory, automorphic forms and number theory. The articles in the present issue reflect this.

For his outstanding accomplishments, professor Tadić has received many awards and recognitions including *Prize "Ruđer Bošković"* 1989 (the highest annual prize for natural sciences in Croatia), medal *Red Danice Hrvatske s likom Ruđera Boškovića* 1996, *Andrija Mohorovičić prize* of University of Zagreb (2013). He was elected to a full member of the Croatian Academy of Sciences and Arts and the Academia Europea in 2000.

Goran Muić
Guest editor

RAD HAZU. MATEMATIČKE ZNANOSTI
Vol. 28 = 558 (2024): 3-48
DOI: https://doi.org/10.21857/mzvkpto109

THE TADIĆ PHILOSOPHY: AN OVERVIEW OF THE GUIDING PRINCIPLES AND UNDERLYING IDEAS IN THE WORK OF MARKO TADIĆ

Neven Grbac and Marcela Hanzer

To Marko Tadić for his 70th birthday

Abstract. This paper provides an overview of the guiding principles and underlying ideas in the work of Marko Tadić. His research is mostly concerned with the representation theory of reductive groups over local fields. From the authors' perspective, the most important guiding principles in his work are the essential simplicity of harmonic analysis, even in the non-commutative non-compact case, the Lefschetz principle saying that the representation theory over archimedean and non-archimedean fields should be studied in a unified way, and the principle of comparison of Jacquet modules. Besides these, the most prominent and fruitful ideas are the structural external approach to the unitary dual, the unitarizability along the lines, the use of topology of various duals to get information in harmonic analysis and arithmetic of the underlying group, and the interplay between unitarizability and Arthur packets. All these principles and ideas are the subject of this paper.

1. Introduction

Writing a complete overview of someone's mathematical work is an extremely difficult task. Any such attempt necessarily reflects the opinions, mathematical taste, subjective viewpoints, biased highlights, incomplete conclusions and illusions of the authors. Having that in mind, we feel that this paper should begin with a disclaimer.

Disclaimer. *This paper is* not *an attempt of writing a complete account of the work of Marko Tadić. It is* neither *a historical account of the topics studied by him. All the mistakes and wishful thinking conclusions are solely the responsibility of the authors.*

2020 *Mathematics Subject Classification.* 22E50, 22E55, 11F70, 01A65, 01A70.
Key words and phrases. Work of Marko Tadić, representation theory of p-adic groups, harmonic analysis, Lefschetz principle, parabolic induction, unitarizability, Arthur packets.

In other words, this paper is nothing else than our personal subjective viewpoint of the most important guiding principles and underlying ideas present in the work of Tadić. We are pretty sure that any other author, including Tadić himself, would not make the same choices and not point out the same ideas. The ideas described in this paper are reoccurring themes in his work, not necessarily his inventions, but used as the fundamental tools and guiding principles in the lines of his research over the years. They could be described in one word as the *Tadić philosophy*, as indicated in the title.

The paper begins with three guiding principles present in the entire mathematical opus of Tadić. The first principle is the *simplicity of harmonic analysis*, which seeks, despite the complicated setting and techniques, for simple principles and answers to the main problems of non-commutative harmonic analysis. The motivation and inspiration for this principle is the beauty and simplicity of classical harmonic analysis, in particular, Fourier series and, more generally, Fourier analysis on locally compact Abelian groups. The main evidence for this principle in the work of Tadić is the classification of the unitary dual of the general linear groups, which is at the same time simple and beautiful, despite the complicated setting of the representation theory of general linear groups and the techniques required to establish the final results. Although it is difficult to expect such a nice result in the case of the unitary dual of classical groups, the most recent work of Tadić indicates, in form of certain conjectures, that this problem could also get a simple answer in the framework of local Arthur packets.

The second guiding principle in the work of Tadić is the *Lefschetz principle*, formulated by Harish-Chandra, which predicts that "whatever is true for real groups is also true for p-adic groups." However, Tadić mostly applied this principle in the opposite direction, by transferring the results and techniques from the p-adic setting to the real and complex groups. The prominent example of this is again the classification of the unitary dual of general linear groups. More evidence is provided by the determinantal formula of Tadić.

The third guiding principle in the work of Tadić, at least from our perspective, is related to the comparison of Jacquet modules. This principle of the *comparison of Jacquet modules* claims that the more detailed understanding of parabolically induced representations in representation theory of reductive groups can be achieved by comparing Jacquet modules with respect to as many as possible parabolic subgroups. In other words, the more parabolic subgroups at our disposal, the more possible sources of information on the representation theory. The first implications of this principle led Tadić to several reducibility criteria for induced representations and their composition series. However, it is also the underlying principle in many other ideas in his work. The best example is perhaps the idea to apply the external approach to study the unitary dual of general linear groups and classical groups.

The rest of the paper is devoted to the description of the four, at least in our opinion, crucial ideas underlying the work of Tadić. The first is the external approach to the representation theory of reductive groups, which is based on the Hopf ring and Hopf algebra structures on the Grothendieck group of the category of finite length representations. This idea led not only to the classification of the unitary dual of general linear groups, but also to many results in the representation theory of classical p-adic groups.

The second idea is to use the approach to unitarizability along the lines in the study of the unitary dual of classical p-adic groups. It is based on the division of representations of a classical p-adic group into certain lines of representations. The idea is that the unitarizability of an irreducible representation could perhaps be reduced to the unitarizability of corresponding representations in a certain special types of these lines. Tadić poses two questions regarding these unitarizabilites. The affirmative answer to these questions would considerably simplify the quest for the unitary dual of classical p-adic groups.

The third idea underlying the work of Tadić is to consider the implications of the topology on the unitary and non-unitary dual to the representation theory and harmonic analysis on reductive groups, and its arithmetic consequences. This thread of his work deals with different aspects of representation theory of classical p-adic groups. For instance, the reducibility question for parabolically induced representations is studied in terms of certain converging sequences in the topology of the non-unitary dual. A special attention is paid to the isolated representations in the topology of both unitary and non-unitary dual, as well as certain other types of duals related to arithmetic. The isolated representations are always special in some sense, and often have important relations to the arithmetic questions for the underlying group.

The final idea described here is the most recent one. It is the idea to compare and combine the unitarizability problem with the description of the local Arthur packets. Since local Arthur packets consist of possible local components of representations in the discrete spectrum, these are all unitary. On the other hand, Tadić has identified certain critical points in the study of the unitary dual of classical p-adic groups. He then conjectured that a given representation at the critical point is unitarizable if and only if it is in a local Arthur packet.

The structure of the paper follows closely the guiding principles and underlying ideas mentioned above. Each of the remaining sections is devoted to the explanation and description of one of the principles and ideas. The only exception is the preliminary section, that follows this introduction, which provides the necessary background and notation for the rest of the paper. The sections, other than the preliminary section, are almost independent, and could be read in any order.

The reader should be aware that parts of the text are accessible even without reading the preliminaries. Most of the sections in this paper consist of two parts divided by the sign $*\quad *\quad *$. The first part, above the sign, is meant to provide an overview of the covered topic in more general terms, hopefully accessible to a wider mathematical community, and free of notational subtleties as much as possible. The second part, below the sign, is just a bit more involved, provides examples, more detailed descriptions and results on the covered topic in each section.

At the end of the introduction, we would like to thank Goran Muić for the invitation to contribute to this volume. The paper is dedicated to Marko Tadić on the occasion of his 70th birthday. We would like to use the opportunity to express our gratitude to Marko for all of his beautiful mathematics, ideas and thoughts. We wish for even more Marko's mathematical pearls in many years to come...

2. Preliminaries and notation

Let F be a p-adic field, that is, a finite extension of the field $\mathbb{Q}_p$ of p-adic numbers. Although many of the results discussed below are valid in any characteristic different than two, or even for any local field, we stick in this paper to the case of characteristic zero.

Let $\mathbf{G}$ be a reductive algebraic group defined over F. The group of its F-rational points is denoted by $G = \mathbf{G}(F)$, and referred to as a p-adic reductive group. Throughout the paper we assume that $\mathbf{G}$ is F-split, and most of the time G is one of the following groups:

- the general linear group $GL(n, F)$,
- the special linear group $SL(n, F)$,
- the symplectic group $Sp(2n, F)$,
- the odd special orthogonal group $SO(2n + 1, F)$.

The F-rank of the former two groups is $n - 1$ and the F-rank of the latter two groups is n.

We now introduce definitions related to the structure theory of the groups G. We avoid the exact general definitions in the framework of reductive groups, but give makeshift definitions adjusted to the cases of the general linear groups and classical groups above. These groups have natural realizations as matrix groups, obtained by fixing a basis in F^n on which these groups naturally act. The symplectic, respectively odd special orthogonal group, is defined as the subgroup of the special linear group preserving a non-degenerate skew-symmetric, respectively symmetric, bilinear form. The choice of an appropriate basis with respect to this form leads to convenient matrix realizations.

Structure of the general linear group. The conjugacy classes of parabolic subgroups in $GL(n, F)$ are in one-to-one correspondence with the set of ordered partitions of n into positive integers. Given such a partition $(n_1, \dots, n_k)$,

where $\sum_{i=1}^{k} n_i = n$, a parabolic subgroup in the corresponding conjugacy class is denoted by $P = P_{(n_1,\dots,n_k)}$. Its Levi decomposition is the semidirect product decomposition of the form $P = MN$, where the Levi subgroup M is isomorphic to

$$M \cong GL(n_1, F) \times \cdots \times GL(n_k, F),$$

and N is the unipotent radical. In the case of $k = 1$, so that the partition is a singleton $n_1 = n$, we obtain $P = G$. In the case of $k = n$, so that the partition consists of n ones, we obtain a Borel subgroup B, which is a minimal parabolic subgroup. Its Levi decomposition is denoted by $B = TU$, where T is a maximal split torus in $GL(n, F)$ isomorphic to the direct product of n copies of $GL(1, F)$, and U is the unipotent radical. Throughout the paper we denote by ν the character $\nu = |\det|$ of $GL(m, F)$, where the absolute value is the p-adic absolute value on F, and m is any positive integer.

Structure of classical groups. Similarly as in the case of the general linear group, the conjugacy classes of parabolic subgroups of the classical p-adic group G_n of rank n, as introduced above, are in one-to-one correspondence with the set of ordered partitions of non-negative integers $m \leq n$ into positive integers. Given an ordered partition $(n_1, \dots, n_k)$ of some $m \leq n$, a parabolic subgroup in the corresponding conjugacy class is denoted by $P = P_{(n_1,\dots,n_k;n')}$, where $n' = n - m$. It has a Levi decomposition $P = MN$, with the Levi subgroup M isomorphic to

$$M \cong GL(n_1, F) \times \cdots \times GL(n_k, F) \times G_{n'},$$

where $G_{n'}$ is the group of the same type as G_n, but of rank $n' = n - m \leq n$, and N is the unipotent radical. We set G_0 to be the trivial group. Note that in the case of $m = 0$, there is no ordered partition of m into positive integers, but still this degenerate case corresponds to the parabolic subgroup $P = G_n$. In the case of $k = m = n$, so that the partition consists of n ones, we obtain a Borel subgroup B of G_n, which is a minimal parabolic subgroup. Its Levi decomposition is denoted by $B = TU$, where T is a maximal split torus in G_n isomorphic to the direct product of n copies of $GL(1, F)$, and U is the unipotent radical.

Representations. A *representation* π of a p-adic group G as above on a complex vector space V is a homomorphism

$$\pi : G \to GL(V).$$

We write (π, V) for the representation, if the underlying vector space of the representation π should be specified. Note that V can be, and usually is, infinite-dimensional.

Let (π, V) be a representation of G. Let W be a subspace of V invariant under the action of G through π. We say that W is G-invariant. Then

the representation of G on W is called a *subrepresentation* of the representation (π, V). The trivial subspace $\{0\}$ and the full space V are obviously subrepresentations of (π, V).

The representation (π, V) is *irreducible* if the only G-invariant subspaces of V are $\{0\}$ and V itself. In other words, these are the only subrepresentations of (π, V). Definitions of a subrepresentation and irreducibility usually require some notion of closedness, but this definition is enough for our purposes, since we may, for the moment, ignore altogether the topology on V.

Let (π, V) be a representation of G. A vector $v \in V$ is called *smooth* if it is fixed, through π, by an open compact subgroup of G. The representation (π, V) is *smooth* if each vector in V is smooth. The open compact stabilizers of smooth vectors depend on the vector $v \in V$.

For any open compact subgroup K of G, denote by V^K the subspace of V which consists of all K-fixed vectors in V. The representation (π, V) is *admissible* if it is smooth and V^K is finite-dimensional for each open compact subgroup K of G.

In the rest of the paper, all representations are assumed to be smooth and admissible, unless otherwise specified.

A representation (π, V) is a *represention of finite length* if its Jordan–Hölder series is finite. In that case, its length is called the *length* of the representation π. Recall that such Jordan–Hölder series of (π, V) is obtained from an increasing filtration

$$\{0\} = V_0 \subsetneqq V_1 \subsetneqq V_2 \subsetneqq \cdots \subsetneqq V_{\ell-1} \subsetneqq V_\ell = V$$

of V by G-invariant subspaces V_j such that, for $j = 1, \ldots, \ell$, the quotients of the filtration V_j/V_{j-1}, with the natural action of G arising from π, are irreducible representations of G. These irreducible representations, obtained as quotients of the filtration, are referred to as the *subquotients* or *irreducible constituents* of π. They form the Jordan–Hölder series of the representation π of finite length, which is in this context also called the composition series of π. In this situation, the length of π is ℓ. If σ is a subquotient of π, we write $\sigma \leq \pi$. More generally, if σ is a representation of G such that all its subquotients appear in the composition series of π, we also write $\sigma \leq \pi$.

A representation (π, V) is *unitarizable* if there exists an inner product $(\,\cdot\,|\,\cdot\,)$ on V such that

$$(\pi(g)v_1|\pi(g)v_2) = (v_1, v_2) \text{ for all } v_1, v_2 \in V \text{ and } g \in G.$$

Unitarizability of representations of reductive groups is one of the main topics of Tadić's research.

Let (π, V) and (π', W) be two representations of the same group G. Any linear operator A from V to W such that

$$A(\pi(g)v) = \pi'(g)(Av) \text{ for all } v \in V, g \in G,$$

that is, which commutes with the actions of G, is called the *intertwining operator* between representations π and π'. If there exists an intertwining operator which is an isomorphism, we say that these two representations are *isomorphic* and write $\pi \cong \pi'$.

Let (π, V) be a representation of G. On the space $\hat{V}$ of linear functionals on V, one can introduce a G-action, denoted by $\hat{\pi}$, in the following way. Let $\langle \cdot\,, \cdot \rangle$ be the usual linear algebra pairing between V and $\hat{V}$. We define

$$\langle \hat{\pi}(g)\hat{v}, v\rangle = \langle \hat{v}, \pi(g^{-1})v\rangle,$$

for $g \in G$, $v \in V$ and $\hat{v} \in \hat{V}$. This representation is not smooth. The space of smooth vectors in the representation $(\hat{\pi}, \hat{V})$ is G-invariant. The representation of G on the subspace of smooth vectors is called the *contragredient* representation of π and denoted by $(\widetilde{\pi}, \widetilde{V})$. It is a smooth and admissible representation of G. A representation π is called selfcontragredient if it is isomorphic to its contragredient, i.e., if $\pi \cong \widetilde{\pi}$.

For the fixed $v \in V$ and $\widetilde{v} \in \widetilde{V}$, the *matrix coefficient* associated to v and $\widetilde{v}$ is the function on G defined by the assignment

$$g \mapsto \langle \widetilde{v}, \pi(g)v\rangle.$$

The matrix coefficients allow the study of analytic properties of representations. A representation is *square-integrable* if all of its matrix coefficients are square-integrable on G modulo the center of G, it is *supercuspidal* if all of its matrix coefficients are compactly supported modulo center, and it is *tempered* if all of its matrix coefficients are $L^{2+\varepsilon}$ functions on G modulo center for all $\varepsilon > 0$.

Note that the condition for the matrix coefficients of a representation of $GL(m, F)$ to be L^2 modulo center, implies that this representation is necessarily unitarizable. The representations of $GL(m, F)$ of the form $\nu^x\delta^u$, where x is a real number and δ^u a square-integrable representation of $GL(m, F)$ are called *essentially square-integrable representations*. Conversely, for any essentially square-integrable irreducible representation δ, the corresponding x as above is unique. To conclude, for each essentially square integrable representation δ, there exists a unique real number $e(\delta)$ and a square-integrable representation δ^u such that

$$\delta \cong \nu^{e(\delta)}\delta^u,$$

where $e(\delta)$ is called the *exponent* of the representation δ.

It is easy to see that every irreducible supercuspidal representation ρ of G is essentially square integrable. Hence, there exists a unique exponent $e(\rho) \in \mathbb{R}$ and a unitary supercuspidal representation ρ^u such that

$$\rho \cong \nu^{e(\rho)}\rho^u.$$

The irreducible supercuspidal representations of Levi subgroups of G are the building blocks of all the irreducible representations of G. We explain momentarily in which sense.

Parabolic induction. Let G be the p-adic classical or general linear group, as introduced above. Let P be a parabolic subgroup of G. Let $P = MN$ be a Levi decomposition of P, where M is the Levi subgroup and N the unipotent radical. Recall that the Levi subgroup M is a direct product of smaller general linear groups and a smaller classical group in the case of classical groups. Let (σ, W) be a representation of M. We extend this representation trivially over N, so that we obtain a representation of P, still denoted by σ. The representation of G *parabolically induced* from σ is denoted by

$$\mathrm{Ind}_P^G(\sigma),$$

and defined as follows. The underlying vector space is the space V of all functions $f : G \to W$ which satisfy

(i) $f(mug) = \delta_P(m)^{1/2}\sigma(m)f(g)$, for all $m \in M, u \in N, g \in G$,
(ii) there exists an open compact subgroup K of G, which depends on f, such that $f(gk) = f(g)$ for every $k \in K$, $g \in G$.

The action of G on the space V of the parabolically induced representation $\mathrm{Ind}_P^G(\sigma)$ is by right translations. If we denote that action by π, it is defined as

$$(\pi(g_0)f)(g) = f(gg_0),$$

for $g_0, g \in G$ and $f \in V$.

Here δ_P denotes the modular function of P, which is used in (i) to obtain a convenient normalization of parabolic induction. With this normalization, the parabolic induction preserves unitarizability. The parabolic induction may be viewed as a functor from the category of representations of finite length of the Levi subgroup M to the category of such representations of G. This holds because it can be proved that, besides smoothness and admissibility, parabolic induction preserves the property of finite length.

Importance of parabolic subgroups. The parabolic subgroups are of the main interest for the representation theory of the groups G as above. Namely, they play a crucial role in the process of parabolic induction, which builds a representation of the group G starting from a representation of a Levi subgroup.

In the case of the general linear group and classical groups, the Levi subgroups are direct products of smaller general linear groups, and a smaller classical group in the case of classical groups. This means that one can guess, very optimistically, a possibility of certain inductive procedure in describing representations of general linear groups or classical groups using description of the set of representations of smaller groups of the same type.

This is exactly what is achieved by the process of parabolic induction, not only in general considerations, such as the Langlands quotient classification of irreducible representations of any reductive group which is based on parabolic induction. It also happens in specific cases, such as the case of the general linear groups, in which using the more structural approach of considering at the same time all unitarizable representations of all general linear groups, i.e., of all ranks, yields remarkable results of Tadić. This is explained in detail in Section 5 and Section 6.

Supercuspidal representations as "building blocks". Having the necessary technology in form of parabolic induction in place, we can now explain in what sense are irreducible supercuspidal representations the "building blocks" of all irreducible representations of the p-adic group G as above.

For every irreducible representation π of G, there exists a parabolic subgroup P and an irreducible supercuspidal representation σ of M such that π is a subrepresentation of the corresponding induced representation $\mathrm{Ind}_P^G(\sigma)$ (cf. [10]).

This yields another way to characterize irreducible supercuspidal representations of G. They are precisely those irreducible representations of G which cannot occur as a subquotient of any representation parabolically induced from the representation of the Levi subgroup of a *proper* parabolic subgroup.

Essentially square-integrable representations of $GL(m,F)$. There is a nice characterization of essentially square-integrable representations of the general linear groups. Each irreducible essentially square-integrable representation δ of $GL(m,F)$ is obtained as the unique irreducible subrepresentation of the induced representation

$$\mathrm{Ind}_Q^{GL(m,F)}\left(\nu^{\frac{l-1}{2}}\rho\otimes\nu^{\frac{l-3}{2}}\rho\otimes\cdots\otimes\nu^{-\frac{l-1}{2}}\rho\right),$$

for an irreducible supercuspidal representation ρ of $GL(d,F)$ and a positive integer l, where $m=dl$ and Q is the parabolic subgroup of $GL(m,F)$ with the Levi subgroup isomorphic to the direct product of l copies of $GL(d,F)$. We denote the essentially square-integrable representation δ which is the unique subrepresentation of the induced representation above by

$$\delta=\delta[\nu^{-\frac{l-1}{2}}\rho,\nu^{\frac{l-1}{2}}\rho].$$

We often say, if ρ is fixed, that it is the essentially square-integrable representation attached to the segment $[-\frac{l-1}{2},\frac{l-1}{2}]$ of length l.

Note that the twisting of the representation $\delta[\nu^{-\frac{l-1}{2}}\rho,\nu^{\frac{l-1}{2}}\rho]$ by the character ν^x is realized as the shift of the exponents in the segment by x, i.e.,

$$\nu^x\delta[\nu^{-\frac{l-1}{2}}\rho,\nu^{\frac{l-1}{2}}\rho]\cong\delta[\nu^{x-\frac{l-1}{2}}\rho,\nu^{x+\frac{l-1}{2}}\rho].$$

Hence, replacing ρ by ρ^u results with the essentially square-integrable representation

$$\delta = \delta[\nu^{-\frac{l-1}{2}}\rho, \nu^{\frac{l-1}{2}}\rho] \cong \nu^{e(\rho)}\delta[\nu^{-\frac{l-1}{2}}\rho^u, \nu^{\frac{l-1}{2}}\rho^u].$$

The representation associated to the segment $[\nu^{-\frac{l-1}{2}}\rho^u, \nu^{\frac{l-1}{2}}\rho^u]$ on the right-hand side is a square-integrable representation, so that we may write

$$\delta^u = \delta[\nu^{-\frac{l-1}{2}}\rho^u, \nu^{\frac{l-1}{2}}\rho^u].$$

Then, $e(\delta) = e(\rho)$, and the essentially square-integrable representation δ is isomorphic to

$$\delta \cong \nu^{e(\delta)}\delta^u,$$

where $e(\delta)$ is the exponent of δ, and δ^u is the square-integrable representation defined above.

Notation for the parabolic induction. Essentially from the work of Bernstein and Zelevinsky [7], there is a special notation for the parabolic induction in the case of the general linear groups. Let $P = P_{(n_1,\dots,n_k)}$ be a parabolic subgroup of $GL(n,F)$ corresponding to the partition $(n_1,\dots,n_k)$ of n into positive integers. The Levi subgroup M of P is isomorphic to the direct product

$$M \cong GL(n_1,F) \times \cdots \times GL(n_k,F).$$

Given a representation $\sigma \cong \sigma_1 \otimes \cdots \otimes \sigma_k$ of M, where σ_j is a representation of the factor $GL(n_j,F)$ of M, the induced representation

$$\mathrm{Ind}_P^{GL(n,F)}(\sigma) = \mathrm{Ind}_{P_{(n_1,n_2,\dots,n_k)}}^{GL(n,F)}(\sigma_1 \otimes \sigma_2 \otimes \cdots \otimes \sigma_k)$$

is denoted by

$$\sigma_1 \times \sigma_2 \times \cdots \times \sigma_k.$$

Originally introduced by Faddéev in [13], this notation not only shortens the usual notation and omits the tedious bookkeeping regarding parabolic subgroups, but also suggests certain very important properties of parabolic induction, which are seamlessly incorporated in the notation. These are, among others, induction in stages and independence of the Jordan–Hölder series of the induced representation on the order of σ_j. The latter refers to the parabolic induction from the so-called associate parabolic subgroups which corresponds to changing the order of the factors above. It gives rise to possibly different representations, but with the same Jordan–Hölder series. The product notation is also compatible with the the structure of the Hopf algebra, obtained when irreducible representations of general linear groups of all ranks are organized in the (sum of) Grothendieck groups. More about that can be found in Section 6, as Tadić used this notation extensively in his work.

Inspired by the benefits of the notation for the parabolic induction in the case of general linear groups, Tadić invented the analogous notation in the case of classical groups. It appeared for the first time in his work with

Sally [36], and, systematically, in [57]. Let $P = P_{(n_1,\dots,n_k;n')}$ be a parabolic subgroup of the classical group G_n of rank n corresponding to the partition $(n_1,\dots,n_k)$ of $n-n'$. Let $\sigma \cong \sigma_1 \otimes \cdots \otimes \sigma_k \otimes \sigma'$ be a representation of the Levi subgroup M of P, where σ_j is a representation of the factor $GL(n_j,F)$ of M, and σ' a representation of the smaller classical group $G_{n'}$ appearing as a factor in M. The induced representation

$$\mathrm{Ind}_P^{G_n}(\sigma) = \mathrm{Ind}_{P_{(n_1,n_2,\dots,n_k;n')}}^{G_n}(\sigma_1 \otimes \sigma_2 \otimes \cdots \otimes \sigma_k \otimes \sigma')$$

is denoted in the notation of Tadić by

$$\sigma_1 \times \sigma_2 \times \cdots \times \sigma_k \rtimes \sigma'.$$

His crucial improvement here is the sign $\rtimes$, which separates the representation of the only factor in the direct product of M which corresponds to the classical group from the remaining factors which are general linear groups. This notation in the case of classical groups remains suggestive for the important properties of the parabolic induction, as well as very well adjusted to the structure of the Hopf module, as explained in Section 6.

In order to gain better insight in the structural information on representations of the considered group G, the above product notation is often slightly modified to distinguish the parabolically induced representation from its semi-simplification. Given a representation π of G of finite length, its *semi-simplification*, denoted by $\mathrm{s.s.}(\pi)$, is isomorphic to the (finite) direct sum of its irreducible subquotients. Thus, passing to the semi-simplification, part of the information is lost, but the benefits of the structural approach to representation theory are huge.

In this spirit, we make the following convention in this paper. The product notation means

$$\sigma_1 \times \cdots \times \sigma_k \rtimes \sigma' = \mathrm{s.s.}\left(\mathrm{Ind}_P^{G_n}(\sigma_1 \otimes \cdots \otimes \sigma_k \otimes \sigma')\right),$$

that is, the semi-simplification of the induced representation. Thus, in this paper, we carefully distinguish between the product notation and the Ind notation. If we should be aware that certain subquotient is in fact a subrepresentation or a quotient, then the product notation will be avoided. On the other hand, the benefits of the product notation, even after taking the semi-simplification, will become clear in the paper.

3. Simplicity of harmonic analysis

The beauty and simplicity of classical harmonic analysis is overwhelming. At the same time, it is one of the most powerful mathematical theories with the widest range of diverse applications in physics, engineering, computer science, music, and different parts of mathematics from differential equations, numerical mathematics and mathematical physics to differential geometry and number theory.

Harmonic analysis was also the starting point of Tadić's mathematical journey. Some of the first papers of Tadić such as [40], and his dissertation [38], are in harmonic analysis, as well as some subsequent papers such as [32]. In his dissertation, he studies the theory of spherical functions for the so-called Gel′fand pairs (G, K). Roughly speaking, one can think of F-points of a split reductive group G over F and the hyperspecial maximal compact subgroup K. He introduces certain Fréchet algebras of K-biinvariant functions on G with some additional properties, and, among other things, defines spherical Fourier transform on these spaces and studies its properties.

The most fundamental part of the classical harmonic analysis is the theory of Fourier series. In its most basic form, it is the theory of expansions of periodic functions into trigonometric series, the so-called spectral expansions. The frequencies of the sine and cosine functions in the series are multiples of the frequency given by the period of the considered periodic function. These are the so-called harmonics, which give the harmonic analysis its name. Under certain technical assumptions, the amplitudes of these harmonics determine the original function. The spectral expansion of periodic functions into elementary functions such as sines and cosines is extremely useful tool in many applications.

However, the full strength of harmonic analysis arises from certain algebraic structure which is compatible with spectral expansions. This is not so obvious from the trigonometric series, and a different point of view on the spectral expansion is required. We explain this in detail in the second part of this section below. Briefly said, the main point is that the period of a periodic function admits the additive structure of a compact Abelian group, and the same group acts on the space of periodic functions. Hence, the sine and cosine functions should be replaced by certain periodic functions that preserve the group structure on the domain and are invariant up to scalar for the group action. The spectral expansion according to these new functions is the proper point of view on Fourier series and the launching pad for the harmonic analysis in general.

The first step towards more general instances of Fourier expansions is the harmonic analysis on locally compact Abelian groups. In this case, the space of square-integrable complex functions on such a group is considered, with an action of the underlying group. As in the theory of Fourier series, the main point is to find a system of functions on the group which preserves the group structure and is invariant up to scalar under the group action. Each of these functions spans a group action invariant one-dimensional subspace in the space of square-integrable functions on the group. It is these invariant subspaces that are the key to the next level of harmonic analysis. Note that we ignore here the fact that the spectral decomposition in the case of arbitrary locally compact Abelian group could involve direct integrals, not only sums, of basic functions.

The simplest non-commutative instance of harmonic analysis is the harmonic analysis on compact Lie groups. Its aim is to decompose the functions on a Lie group according to the structure on the space of square-integrable complex functions on this group arising from certain natural group action. However, in this case, it is not possible to find a system of functions and form the spectral expansion with respect to these functions. The reason is that, unlike in the commutative case, the invariant subspaces are no longer one-dimensional. Hence, the harmonic analysis on compact Lie groups means the spectral decomposition of the space of functions on the group into invariant pieces which cannot be further decomposed. Such pieces are irreducible unitary representations of the underlying group. In the case of compact Lie groups these are all finite-dimensional.

The same story can be transferred, almost word by word, to the more general case of non-commutative non-compact locally compact groups, such as p-adic reductive groups. The harmonic analysis on such groups means the spectral decomposition of the space of square-integrable complex functions on the underlying group into pieces that are irreducible and invariant under the natural group action. These are again irreducible unitary representations, but in this case they are not necessarily finite-dimensional. Moreover, the irreducible unitary representations in the spectral decomposition do not exhaust all irreducible unitarizable representations. Nevertheless, the problem of classification of irreducible unitary representations of the considered group, which is referred to the problem of the unitary dual, is closely related and important for the spectral decomposition. Recall that the set of isomorphism classes of irreducible unitary representations of a group is called the unitary dual.

After a lengthy opening of this section, we finally come to the point. The classical theory of Fourier series is essentially very simple. One of the main guiding principles in the work of Tadić is that the harmonic analysis, in the more general context, should resemble the simplicity of Fourier series, despite the more complicated setting and methods. He makes this point explicit in [76, p. 1], by saying:

"[...] the area of harmonic analysis on locally compact groups, a theory which has its roots in the classical Fourier analysis. The classical theory is one of the most applied parts of math, in math as well as outside of math. The reason for this fact is certainly the power of the theory. But it is also related to the simplicity of basic principles of the classical theory. It is hard to expect such simplicity in the setting which we shall consider, since the groups with which we shall deal are much more complicated than the one of the classical theory [...]. Nevertheless, at some directions we get remarkably simple answers."

To illustrate the principle of simplicity of harmonic analysis, we recall now the Tadić classification of the unitary dual of the general linear group

$GL(n,F)$ over a p-adic field F. The classification of the unitary dual of $GL(n,F)$ is a very important result as one of the cornerstones of the harmonic analysis on the p-adic groups, but at the same time its formulation is so beautiful due to its simplicity, that we decided to include the statement here. It is indeed a "remarkably simple answer" as mentioned in the quote above.

Given a square-integrable representation δ of $GL(m,F)$, and a positive integer k, the parabolically induced representation

$$\mathrm{Ind}_{Q}^{GL(n,F)}\left(\nu^{\frac{k-1}{2}}\delta\otimes\nu^{\frac{k-3}{2}}\delta\otimes\cdots\otimes\nu^{-\frac{k-1}{2}}\delta\right)$$

has a unique irreducible quotient, where Q is the parabolic subgroup of $GL(n,F)$ with the Levi subgroup isomorphic to the direct product of k copies of $GL(m,F)$, and $n=km$. The quotient, denoted by $u(\delta,k)$, is often referred to as the Speh representation. Observe that if $k=1$, then $u(\delta,1)=\delta$. With this notation, the unitary dual of the general linear group is described as follows.

Classification of the unitary dual for GL_n (Tadić, [46]; see also [55], [44], [77], [49], [43], [47]). *Let $\mathcal{D}^u$ denote the set of isomorphism classes of square-integrable representations of all $GL(m,F)$, where m ranges over positive integers. Let*

$$\mathcal{IRR}^u=\bigcup_{n=0}^{\infty}\widehat{GL(n,F)}$$

denote the set of isomorphism classes of unitary irreducible representations of all $GL(n,F)$, where n ranges over non-negative integers. Let

$$\mathcal{B}=\left\{u(\delta,k),\ \nu^{\alpha}u(\delta,k)\times\nu^{-\alpha}u(\delta,k)\ :\ \delta\in\mathcal{D}^u,k\in\mathbb{Z}_{>0},0<\alpha<1/2\right\}.$$

Then, the set $\mathcal{IRR}^u$ is completely described as follows:

- *(i) if $\pi_1,\dots,\pi_l\in\mathcal{B}$, then $\pi_1\times\cdots\times\pi_l\in\mathcal{IRR}^u$,*
- *(ii) conversely, if $\pi\in\mathcal{IRR}^u$, then there exist $\pi_1,\dots,\pi_l\in\mathcal{B}$, unique up to permutation, such that $\pi\cong\pi_1\times\cdots\times\pi_l$.*

We turn now to the problem of the unitary dual of classical p-adic groups. Despite a simple form of the solution in the case of general linear groups, it seems that the expectations in the case of classical groups are different. Tadić himself contemplates on that in [76, Sect. 9] as follows:

"In the moment, the unitarizability problem for classical groups seems quite hard, and the solution will be definitely not simple. Despite this, it seems that regarding this problem we are now in better position then we have been regarding GL-unitarizability just before that problem was solved (at the beginning of 1980-es), although the solution there turned out to be very simple. The biggest problem in that time was that a simple answer (as in Theorem A) was not expected. The expectations were quite opposite (and even a possibility of an explicit solution of the problem was in question)."

This quotation is taken from the lectures given by Tadić in 2014 at the 40th Anniversary Midwest Representation Theory Conference, University of Chicago. Since then, he has made substantial progress regarding the unitary dual of classical p-adic groups [82], [80], [26], [27], [74]. In particular, the connections between the unitary dual and local Arthur packets, predicted by a conjecture of Tadić in [81] and elaborated in Section 9, might lead in future to the discovery of a hidden structure in the unitary dual of classical p-adic groups. If this optimistic scenario is fulfilled, the simplicity and beauty of harmonic analysis would be reflected by the simple structural description of the unitary dual of classical groups, just as in the case of general linear groups.

* * *

We now provide more details of the story of algebraic structure underlying harmonic analysis. We begin with the classical theory of Fourier series. Given a measurable periodic function $f : \mathbb{R} \to \mathbb{C}$ of period one, which is also square-integrable over $[0, 1]$, its Fourier series S_f is defined as the trigonometric series

$$S_f(x) = a_0 + \sum_{m=1}^{\infty} \left(a_m \cos(2\pi m x) + b_m \sin(2\pi m x) \right),$$

where the Fourier coefficients a_m and b_m are given by the formulas

$$\begin{aligned} a_0 &= \int_0^1 f(\xi)\, \mathrm{d}\xi, \\ a_m &= 2 \int_0^1 f(\xi) \cos(2\pi m \xi)\, \mathrm{d}\xi, \quad m \geq 1, \\ b_m &= 2 \int_0^1 f(\xi) \sin(2\pi m \xi)\, \mathrm{d}\xi, \quad m \geq 1. \end{aligned}$$

The convergence of the Fourier series is a delicate issue, but if f is smooth, its Fourier series S_f converges to the original function f, and provides a powerful tool for the study of periodic functions in terms of the sine and cosine functions.

We identify periodic functions of period one with functions on the segment $[0, 1]$ with equal values at the end-points 0 and 1. The identification is achieved by the restriction of a periodic function to $[0, 1]$. The space of such functions on $[0, 1]$, which are also measurable and square-integrable over $[0, 1]$, is denoted by $L^2([0, 1])$. Given $f, g \in L^2([0, 1])$, their inner product is defined as

$$(f|g) = \int_0^1 f(\xi)\overline{g(\xi)}\, \mathrm{d}\xi,$$

where $\overline{g(\xi)}$ denotes the complex conjugation. The Fourier coefficients are in fact determined as inner products of f by trigonometric functions. More

precisely,

$$\begin{aligned} a_0 &= (f|1)\,, \\ a_m &= 2\cdot\big(f|\cos(2\pi m\cdot)\big), \quad m\geq 1, \\ b_m &= 2\cdot\big(f|\sin(2\pi m\cdot)\big), \quad m\geq 1, \end{aligned}$$

where 1 stands for the constant function of value one. The reason for such simple explanation is that the trigonometric functions

$$1,\, \cos(2\pi m x),\, \sin(2\pi m x), \quad m\geq 1$$

which appear in the Fourier series, form an orthogonal system for the inner product. Namely, the inner product of different functions in the system is zero, while the inner product of a function in the system by itself gives the inverse of the corresponding multiplicative constant in the formulas. For instance,

$$\big(\cos(2\pi m\cdot)|\cos(2\pi m'\cdot)\big) = \begin{cases} 0, & \text{if } m\neq m', \\ \frac{1}{2}, & \text{if } m=m'. \end{cases}$$

Observe that the inner product of $\cos(2\pi m\cdot)$ by itself is $1/2$, which is the inverse of the multiplicative constant 2 in the formula for a_m. In conclusion, the inner product structure on $L^2([0,1])$ provides, at least formally, a convenient way to determine the Fourier coefficients of a given periodic function.

In order to simplify even more the theory of Fourier series, more algebraic structure is invoked. First of all, a periodic function of period one can be viewed as a function on the interval $[0,1\rangle$, which is the set of representatives for the quotient $\mathbb{R}/\mathbb{Z}$ of additive groups. Thus, we obtain a group structure on the domain of the considered functions. The group $\mathbb{R}/\mathbb{Z}$ is a compact Abelian group, which is isomorphic to the circle group S^1 of complex numbers of modulus one. The homeomorphic isomorphism is given by the assignment

$$x\mapsto \cos(2\pi x)+i\sin(2\pi x)$$

for $x\in[0,1\rangle=\mathbb{R}/\mathbb{Z}$, where $i=\sqrt{-1}$ is the imaginary unit.

The orthogonal system of trigonometric functions is now replaced by the system consisting of exponential functions

$$\chi_n(x)=e^{2\pi i n x}, \quad n\in\mathbb{Z}.$$

These functions are clearly of period one, but they also preserve the group structure. More precisely, χ_n is a unitary character of the group $\mathbb{R}/\mathbb{Z}$, because

$$\chi_n(x+y)=e^{2\pi i n(x+y)}=e^{2\pi i n x}\cdot e^{2\pi i n y}=\chi_n(x)\chi_n(y).$$

and $|\chi_n(x)|=1$. Moreover, all the unitary characters of $\mathbb{R}/\mathbb{Z}$ are obtained this way. The assignment $k\mapsto\chi_k$ defines a natural isomorphism between the additive group $\mathbb{Z}$ of integers and the multiplicative group of unitary characters of $\mathbb{R}/\mathbb{Z}$. This means that the Pontryagin dual, which plays the role of the unitary dual in this setting, of the group $\mathbb{R}/\mathbb{Z}$ is isomorphic to $\mathbb{Z}$.

The inner product of characters equals

$$\begin{aligned}(\chi_n|\chi_m) &= \int_0^1 \chi_n(\xi)\overline{\chi_m(\xi)}\,\mathrm{d}\xi \\ &= \int_0^1 \chi_{n-m}(\xi)\,\mathrm{d}\xi \\ &= \begin{cases} 0, & \text{if } n \neq m, \\ 1, & \text{if } n = m, \end{cases}\end{aligned}$$

where in the first line we used the facts that $\chi_k\chi_l = \chi_{k+l}$ and $\overline{\chi_k} = \chi_{-k}$, and in the last line we integrate a character of a group over the whole group, so that the integral is zero if the character is non-trivial, and equal to the volume of the group if the character is trivial. Thus, the system χ_n, $n \in \mathbb{Z}$, is orthonormal. The sine and cosine functions in the Fourier series can be replaced by χ_n, $n \in \mathbb{Z}$, because

$$\begin{aligned}1 &= \chi_0(x), \\ \cos(2\pi mx) &= \frac{\chi_m(x) + \chi_{-m}(x)}{2}, \quad m \geq 1, \\ \sin(2\pi mx) &= \frac{\chi_m(x) - \chi_{-m}(x)}{2i}, \quad m \geq 1.\end{aligned}$$

The Fourier series of f in the orthonormal system χ_n, $n \in \mathbb{Z}$, reads

$$S_f(x) = \sum_{n\in\mathbb{Z}} c_n\chi_n(x),$$

where the coefficients c_n are given by the inner product as

$$\begin{aligned}c_n &= (f|\chi_n) \\ &= \int_0^1 f(\xi)\overline{\chi_n(\xi)}\,\mathrm{d}\xi \\ &= \int_0^1 f(\xi)e^{-2\pi in\xi}\,\mathrm{d}\xi, \quad n \in \mathbb{Z}.\end{aligned}$$

So far, this is quite similar to the story of sines and cosines, but the first crucial difference is that χ_n are unitary characters, that is, preserve the group structure.

The space $L^2([0,1]) = L^2(\mathbb{R}/\mathbb{Z})$ exhibits an action of the underlying Abelian group $\mathbb{R}/\mathbb{Z}$ by translations. More precisely, given $x_0 \in \mathbb{R}$ and a function $f \in L^2(\mathbb{R}/\mathbb{Z})$, the action is defined as

$$\left(R(x_0)f\right)(x) = f(x + x_0),$$

which is well-defined because f is of period one. Thus, R defines a representation of $\mathbb{R}/\mathbb{Z}$ on the complex vector space $L^2(\mathbb{R}/\mathbb{Z})$, which is referred to as the right regular representation. This is the additional algebraic structure on the

space $L^2(\mathbb{R}/\mathbb{Z})$ that explains why the characters χ_n are perfect for decomposing periodic functions of period one. Observe that the right regular representation is unitary, that is, preserves the inner product on $L^2([0,1]) = L^2(\mathbb{R}/\mathbb{Z})$. Given $f, g \in L^2(\mathbb{R}/\mathbb{Z})$ and $x_0 \in \mathbb{R}$,

$$\begin{aligned}\big(R(x_0)f|R(x_0)g\big) &= \int_0^1 \left(R(x_0)f\right)(\xi)\overline{\left(R(x_0)g\right)(\xi)}\,\mathrm{d}\xi \\ &= \int_0^1 f(\xi+x_0)\overline{g(\xi+x_0)}\,\mathrm{d}\xi \\ &= \int_0^1 f(\xi)\overline{g(\xi)}\,\mathrm{d}\xi \\ &= (f|g)\,,\end{aligned}$$

where we used the additive change of variables $\xi \mapsto \xi - x_0$.

It turns out that the one-dimensional subspaces $\mathbb{C}\chi_n$ spanned by χ_n are invariant for the right regular representation R. Indeed, given $x_0 \in \mathbb{R}$,

$$\begin{aligned}\left(R(x_0)\chi_n\right)(x) &= \chi_n(x+x_0) \\ &= e^{2\pi i n(x+x_0)} \\ &= e^{2\pi i n x_0}\chi_n(x),\end{aligned}$$

for all $x \in \mathbb{R}$, so that

$$R(x_0)\chi_n = e^{2\pi i n x_0}\chi_n \in \mathbb{C}\chi_n.$$

This fact shows that the Fourier series, written in terms of characters χ_n, is compatible with the structure of the right regular representation. This is the underlying reason for the beauty, but also the power, of the harmonic analysis.

Let us pause for the moment at this point to observe the rich algebraic structure present in the theory of Fourier series. The domain of the considered functions is the compact Abelian group $\mathbb{R}/\mathbb{Z}$ which acts on the space $L^2(\mathbb{R}/\mathbb{Z})$ of all these functions by unitary operators, that is, preserves the inner product. The unitary dual of the compact Abelian group $\mathbb{R}/\mathbb{Z}$, referred to as the Pontryagin dual in this context, consists of all unitary characters of $\mathbb{R}/\mathbb{Z}$, which form the Abelian group isomorphic to $\mathbb{Z}$. The unitary characters of $\mathbb{R}/\mathbb{Z}$ are compatible with the group action on $L^2(\mathbb{R}/\mathbb{Z})$ by the right regular representation, so that each of them spans an invariant one-dimensional subspace. This marvelous picture is the starting point for harmonic analysis in more complicated settings.

In a more general setting, the harmonic analysis is actually developed by considering the spaces invariant for the right regular representation of the appropriate L^2 space. These spaces should be irreducible unitary representations of the underlying group. The Fourier series in such setting is the decomposition according to these unitary representations, either as a direct

sum or a direct integral. In any case, the harmonic analysis on locally compact topological groups crucially depends on the understanding and classification of the unitary representations of the underlying group.

Let G be a locally compact topological group with the Haar measure $\mathrm{d}g$. Let $L^2(G)$ be the space of square-integrable measurable complex functions on G, i.e., all measurable functions $f : G \to \mathbb{C}$ such that

$$\int_G |f(g)|^2 \,\mathrm{d}g < \infty.$$

The inner product on $L^2(G)$ is defined by

$$(f_1|f_2) = \int_G f_1(g)\overline{f_2(g)}\,\mathrm{d}g.$$

The right regular representation R of G on $L^2(G)$ is defined as follows. Given $g_0 \in G$ and $f \in L^2(G)$, the action is given by

$$(R(g_0)f)(g) = f(gg_0),$$

for all $g \in G$. It is unitary, because given $g_0 \in G$,

$$\begin{aligned}\big(R(g_0)f_1|R(g_0)f_2\big) &= \int_G \left(R(g_0)f_1\right)(g)\overline{\left(R(g_0)f_2\right)(g)}\,\mathrm{d}g \\ &= \int_G f_1(gg_0)\overline{f_2(gg_0)}\,\mathrm{d}g \\ &= \int_G f_1(g)\overline{f_2(g)}\,\mathrm{d}g \\ &= \left(f_1|f_2\right),\end{aligned}$$

where we made the change of variables $g \mapsto gg_0^{-1}$.

Observe how the basic objects and algebraic structure in the case of the group G are precisely parallel to those in the theory of classical Fourier series, i.e., the case of the group $G = \mathbb{R}/\mathbb{Z}$. The differences appear, because in the case of noncommutative and noncompact G, the G-invariant spaces of $L^2(G)$ are typically infinite-dimensional. Understanding of these spaces is an important step in the study of the unitary dual of G, although there are also other irreducible representations of G that are unitarizable. Thus, the classification of the unitary dual of G requires essentially more complicated techniques and approaches than the classical harmonic analysis of the Fourier series. However, despite the necessity for technically more advanced methods, the Tadić philosophy is that, at the end of the day, harmonic analysis must be simple, just as the classical theory of Fourier series. The evidence for such claim stems from the results in the cases in which the unitary dual is known, including the results of Tadić, as already pointed out above.

4. The Lefschetz principle

The Lefschetz principle for reductive groups was formulated by Harish-Chandra, inspired by the Lefschetz principle in algebraic geometry. The introduction to his lecture notes on harmonic analysis on reductive p-adic groups, given at the Institute for Advanced Study in 1969, begins with the following paragraph:

"The object of these lectures is to illustrate, what I like to call the Lefschetz principle, which, in the context of reductive groups, says that whatever is true for real groups is also true for p-adic groups" [19, p. 1].

And the rest of the introduction goes on to pinpoint examples and his expectations at the time of giving these lectures, how certain facts from the harmonic analysis on real groups should be transferred to the harmonic analysis on p-adic groups. The Lefschetz principle of Harish-Chandra should be understood as a philosophical principle, not a strict claim or a conjecture.

The Lefschetz principle is a reoccurring theme in the work of Tadić as well. However, in his work the flow of ideas and results is mostly in the opposite direction, that is, from p-adic groups to the real groups. This point is very nicely summarized in the joke by Paul Sally, mentioned at the end of Tadić's lecture notes [76]. Sally called the principle present in the work of Tadić the "Schefletz principle", because Tadić primarily proves the results in the case of p-adic groups, and then, the same ideas are extended to the case of real and complex groups. Perhaps the best way to combine the two principles is to refer to them as the unified approach to the representation theory of p-adic and real groups.

A prominent example of the Schefletz principle in the work of Tadić is the classification of the unitary dual of the general linear group [46]. In the p-adic case, this is recalled in Section 3. However, the theorem of exactly the same form holds in the case of the general linear group over the field of real and complex numbers [45], [69]. The only difference is in the amount of square-integrable representations from which the Speh representations $u(\delta, k)$, which serve as the building blocks of all unitary representations, are constructed. In the case of $GL(n, \mathbb{R})$, the possible δ are just the unitary characters of $GL(1, \mathbb{R}) \cong \mathbb{R}^\times$ and the square integrable representations of $GL(2, \mathbb{R})$ classified by their lowest $O(2)$-types. There are no square-integrable representations of $GL(n, \mathbb{R})$ for $n > 2$. In the case of $GL(n, \mathbb{C})$, the only possible δ are the unitary characters of $GL(1, \mathbb{C}) \cong \mathbb{C}^\times$, as there are no square-integrable representations of $GL(n, \mathbb{C})$ for $n > 1$. We also point out the paper [60] on metaplectic covers.

As explained in Section 6, there exist different approaches to the representation theory of the general linear group and classical groups. Over an archimedean local field, the representation theory can be studied using differentiation that leads to the representation theory of Lie algebras. However, in

the p-adic case, passing to the p-adic Lie algebra does not yield any non-trivial results. The useful algebra in the p-adic case is the Hecke algebra of locally constant functions on the group. But in the archimedean case, the algebra of locally constant functions on a Lie group does not give any non-trivial results. Similar phenomenon happens with the restriction to a maximal compact subgroup, which is useful in the archimedean representation theory, but in the p-adic case must be replaced by the theory of types, which are restrictions, in some sense, to certain open compact subgroups.

The upshot of these considerations is that all these methods are extremely useful in one setting, but uninteresting in the other. In other words, they are far from the Lefschetz principle, and it seems as a miracle that the final outcome, for instance, the classification of the unitary dual of the general linear groups, can be formulated in the same way in both archimedean and p-adic case.

The Lefschetz principle in the case of the unitary dual of general linear groups is brought back to life by the external approach to the representation theory of general linear groups and classical groups. This approach of Tadić, described in Section 6, is uniform, independent of the underlying local field, and can be translated word-by-word from the p-adic setting to the archimedean setting. The only minor differences, which arise from the nature of the local field, are in the number of square-integrable representations, and certain technical facts.

The Lefschetz principle is closely related to the simplicity of harmonic analysis principle elaborated in Section 3. It seems that whenever the Lefschetz principle is well understood for certain problem in representation theory of reductive groups, the solution can be formulated in a simpler way, and even the proofs can be better understood and nicely structured. Somehow the understanding of the Lefschetz principle is a prerequisite for finding better points of view at the representation theory and non-commutative harmonic analysis in both archimedean and p-adic setting.

Another example of the Lefschetz principle is provided by the determinantal formula of Tadić [58]. It gives the characters of Speh representations in terms of characters of essentially square-integrable representations simultaneously in the p-adic and archimedean case. The characters of irreducible representations are one of the central problems in representation theory from its beginnings. Already in the classical book of Gel′fand and Naymark[1] [15], they point out the three main goals of representation theory of reductive groups. These are unitary duals, characters of irreducible representations and Plancherel measures. The influence of the work of Gel′fand and Naymark is present in the work of Tadić, in particular, in the early stages of his study of

[1]Although the official English transliteration would be Naymark, the name is often spelled as Naimark, Naĭmark or even Neumark. The last one is used in our list of references, in which we follow the transliteration found in *MathSciNet* and *zbMATH Open* databases.

unitary duals.

* * *

In the rest of this section, the determinantal formula is explained in more detail. In [58], Tadić expressed the characters of twists of Speh representations as linear combinations of the characters of essentially square-integrable representations, or in other words, in terms of the characters of standard representations. Note that the knowledge about the characters of Speh representations guarantees the knowledge about the characters of the whole unitary dual, according to the work of van Dyk [83]. This can be viewed as a special instance of the use of Kazhdan–Lusztig polynomials, but in general, these are very complicated, while the formula of Tadić, turned out to be very simple and elegant. He used a very interesting idea to formally transfer the problem from p–adic to complex groups, thus, providing more evidence for the Lefschetz, or more precisely, Schefletz principle. In both cases, he used information about the end of certain complementary series representations.

Determinantal formula (Tadić, [58, Thm. 5.4]). *Let ρ be an irreducible supercuspidal representation of $GL(d,F)$, where d is a positive integer. Let δ be the essentially square-integrable representation of $GL(m,F)$ defined above as*

$$\delta = \delta[\nu^{-\frac{l-1}{2}}\rho, \nu^{\frac{l-1}{2}}\rho],$$

where l is a positive integer such that $m = dl$. Let k be a positive integer and W_k the group of permutations of the set $\{1,2,\dots,k\}$. Let

$$W_k^{(l)} = \{w \in W_k : w(i) + l \geq i \text{ for all } 1 \leq i \leq k\}.$$

Then, the following identity

$$\nu^{\frac{k+l}{2}} u(\delta,k) = \sum_{w \in W_k^{(l)}} (-1)^{sgn(w)} \prod_{i=1}^{k} \delta[\nu^i\rho, \nu^{w(i)+l-1}\rho].$$

holds in the Grothedieck group of the category of finite length representations of $GL(n,F)$, where $n = mk$ and $u(\delta,k)$ is the Speh representation defined as in Section 3, but δ is not necessarily unitarizable.

Note that the name of the formula stems from the alternating signs in the sum above, and the summation is over the set which is an obvious subset of the symmetric group W_k, just as in the definition of the determinant.

The argument of Tadić was later even simplified by Chenevier and Renard [11]. This was generalized by Lapid and Mínguez [23] to a wider class of representations, the so-called "ladder representations", encompassing the Speh representations, using Jacquet modules and completely avoiding the unitarizability issues.

5. Comparison of Jacquet modules

In the representation theory of p-adic groups one of the most fundamental objects is the parabolically induced representation introduced in Section 2. It is the most important construction of representations arising from representations of smaller groups. The complete understanding of reducibility of parabolically induced representations and their composition series is required in the classification of irreducible representations and irreducible unitary representations of the considered group.

One of the powerful tools in the study of parabolically induced representations are Jacquet modules. The reasons for that are the Frobenius reciprocity, which relates the intertwining operators on the level of the induced representation of the full group to the intertwining operators of Jacquet modules on the level of the Levi subgroups, and the geometric lemma and the related structural formula, recalled in Section 6, which determines the Jacquet module of parabolically induced representations.

Let G be a reductive p-adic group and $P = MN$ a parabolic subgroup with the Levi subgroup M and the unipotent radical N. Given a representation π of a reductive p-adic group G in a complex vector space V, the Jacquet module of π with respect to P is the representation $r_M^G(\pi)$ of the Levi subgroup M acting on the space

$$V_N = V/V(N), \text{ where } V(N) = \operatorname*{span}_{u\in N, v\in V} \{\pi(u)v - v\}$$

by the formula

$$\Big(\big(r_M^G(\pi)\big)(m)\Big)(v + V(N)) = \delta_P(m)^{-1/2}\pi(m)v + V(N),$$

where $m \in M$, $v \in V$ and δ_P is the modular function of P. The role of the modular function is a convenient normalization of Jacquet modules, as in the definition of parabolic induction in Section 2.

The fundamental relation between induced representations and Jacquet modules is the Frobenius reciprocity. It says that, given a finite length representation π of G and a finite length representation σ of M, there is an isomorphism

$$\operatorname{Hom}_G\Big(\pi, \operatorname{Ind}_P^G(\sigma)\Big) \cong \operatorname{Hom}_M\Big(r_M^G(\pi), \sigma\Big)$$

of spaces of intertwining operators. In other words, the functor of taking Jacquet modules is left adjoint to the functor of parabolic induction.

The Jacquet modules are not the invention of Tadić. They were used earlier by Jacquet [20], Casselman [10] and Bernstein–Zelevinsky [7]. However, his idea to apply Jacquet modules with respect to several different parabolic subgroups and compare the results turned out extremely fruitful. His main point is that the Jacquet module techniques yield better results for larger

groups, simply because there are more parabolic subgroups at our disposal [61], [36]. This idea is referred to as the Tadić philosophy by Blondel in [8].

To put it in his own words, quoted from [61], "Surprisingly, Jacquet modules are much more powerful in more complicated situations. The reason for this is simple: there are more standard parabolic subgroups. Therefore, one can compare information on Jacquet modules coming from different parabolic subgroups. For this approach to be most effective, one needs to direct one's attention to Jacquet modules with respect to large parabolic subgroups (which was not usually done in the early applications of this use of Jacquet modules). We note that this approach is particularly convenient for classical groups because the Levi subgroups of their parabolic subgroups are direct products of general linear groups and smaller classical groups."

The limitations of the Jacquet module techniques in the case of smaller groups are best observed in the case of $G = SL(2, F)$, as pointed out in [61]. In that case, the only proper parabolic subgroup, up to conjugacy, is the Borel subgroup B of upper-triangular matrices in $SL(2, F)$. Its Levi subgroup is the maximal split torus $T \cong F^\times$ of diagonal matrices in $SL(2, F)$. Given a multiplicative character χ of $F^\times$, one may construct the parabolically induced representation

$$\mathrm{Ind}_B^{SL(2,F)}(\chi).$$

Since B is, up to conjugacy, the only proper parabolic subgroup of $SL(2, F)$, the only Jacquet module that can be considered in this setting is

$$r_T^{SL(2,F)}\left(\mathrm{Ind}_B^{SL(2,F)}(\chi)\right),$$

which is not sufficient to solve even the basic questions. For example, in the case of χ^2 is trivial, the above induced representation is irreducible if χ is trivial and reducible if χ is not trivial. In the case $\chi = |\,|^\alpha$, with $\alpha \in \mathbb{R}$, it is irreducible if and only if $\alpha \neq \pm 1$. These facts cannot be obtained by a simple application of Jacquet modules.

On the other hand, in case of larger classical group G, the Jacquet module techniques provide reducibility and irreducibility criteria arising from comparing Jacquet modules with respect to different parabolic subgroups. Such criteria proved to be extremely useful in the study of parabolically induced representations in a series of papers of Tadić, e.g. [62], [61], [63], [31], [59], [64], [72], [71], [53], [66], [65], [56], [17].

* * *

As an example, which highlights the flavor of these results, we recall now the first and simplest reducibility criterion of [62, Sect. 3].

Reducibility criterion (Tadić [62, Lemma 3.1]). *Let G be a reductive p-adic group. Let π, π' and Π be representations of G of finite length. Suppose that*

(i) $\pi \leq \Pi$ *and* $\pi' \leq \Pi$,

(ii) there exist parabolic subgroups P_1 *and* P_2 *of* G*, with Levi subgroups* M_1 *and* M_2*, respectively, such that*

$$r^G_{M_1}(\pi) \not\leq r^G_{M_1}(\pi'),$$
$$r^G_{M_2}(\pi) + r^G_{M_2}(\pi') \not\leq r^G_{M_2}(\Pi).$$

Then, π *is reducible and has a common irreducible subquotient with* π'*.*

Even without going into details, it is now clear why larger groups are more suitable for Jacquet module techniques. There are more parabolic subgroups, and therefore more possible choices for P_1 and P_2 in condition (ii) of Lemma 5. The comparison of Jacquet modules with respect to carefully chosen P_1 and P_2 yields the reducibility results required in applications.

In practice, as observed in [62, Rmk. 3.2], the reducibility criterion is applied to the setting in which the representations π, π' and Π are parabolically induced representations. More precisely, let P, P' and Q be parabolic subgroups of G, with Levi subgroups M, M' and L, respectively. Let σ, σ' and Σ be irreducible representations of M, M' and L. Then, we take π, π' and Π to be the induced representations

$$\pi = \mathrm{Ind}^G_P(\sigma),$$
$$\pi' = \mathrm{Ind}^G_{P'}(\sigma'),$$
$$\Pi = \mathrm{Ind}^G_Q(\Sigma).$$

The conditions (i) and (ii) of Lemma 5 in this setting read

(i) $\mathrm{Ind}^G_P(\sigma) \leq \mathrm{Ind}^G_Q(\Sigma)$ and $\mathrm{Ind}^G_{P'}(\sigma') \leq \mathrm{Ind}^G_Q(\Sigma)$

(ii) there exist parabolic subgroups P_1 and P_2 of G, with Levi subgroups M_1 and M_2, respectively, such that

$$r^G_{M_1}\left(\mathrm{Ind}^G_P(\sigma)\right) \not\leq r^G_{M_1}\left(\mathrm{Ind}^G_{P'}(\sigma')\right),$$
$$r^G_{M_2}\left(\mathrm{Ind}^G_P(\sigma)\right) + r^G_{M_2}\left(\mathrm{Ind}^G_{P'}(\sigma')\right) \not\leq r^G_{M_2}\left(\mathrm{Ind}^G_Q(\Sigma)\right).$$

Observe that condition (ii) contains Jacquet modules of induced representations, which should be determined. But this boils down to the so-called geometric lemma and the closely related structural formula, which is a slightly different story, and will be revisited in the context of classical groups in Section 6.

6. External approach to unitary duals

In the representation theory of non-compact non-commutative reductive groups over archimedean local fields, that is, the fields $\mathbb{R}$ and $\mathbb{C}$ of real and complex numbers, respectively, the methods which can be referred to as "internal" appear to be very useful. These methods substantially exploit the

internal structure of the considered representations. The linearization of the problem by differentiation leads to the study of the representations of the Lie algebra of the considered Lie group, and the restriction to a maximal compact subgroup allows the use of the well-known representation theory of compact Lie groups. The combination of these two ideas was pursued in the work of many people in the field of real reductive groups, among which we only mention the work of Vogan [84].

In the case of p-adic reductive groups, these internal methods of the archimedean theory are not appropriate. The study of the p-adic Lie algebra and its complex representations, for instance, does not yield any non-trivial results. One of the ways to circumvent this problem is to use a different approach, which can be referred to as "external", because it never considers the internal structure of representations. It instead considers a certain algebraic structure on the set of isomorphism classes of representations of the given p-adic group. The original idea goes back to the work of Bernstein and Zelevinsky [87] in the case of the general linear group over a p-adic field. However, Tadić used this approach extensively in the case of general linear groups, extended it to the case of classical p-adic groups, and showed that the same approach works for the general linear groups over archimedean local fields as well.

The external approach to unitary duals led Tadić to the complete classification of the unitary dual of the general linear group over any local field, except that in the case of an archimedean local field the proof relied on certain technical conjecture of Kirillov. The conjecture of Kirillov was announced in [22], but not proved at the time of Tadić's classification result. It was later proved by Baruch in [6].

The statement of the classification is already given in Section 3 in the case of the general linear group over a p-adic field as an example of the simple final answer to a complicated problem in the non-commutative harmonic analysis. However, the same statement is true for the archimedean case, as well, which provides a superb example of the Lefschetz principle, as already mentioned in Section 4.

Even the unitary dual of the general linear group over a p-adic division algebra D can be approached by the same external method [52]. However, in this case, the complete proof at the time depended on certain facts, denoted by (U0)–(U4) by Tadić. The facts (U3) and (U4) are already proved in [52], as well as the fact that (U0) and (U1) together imply (U2). When Badulescu and Renard proved (U1) in [5], it remained to prove (U0), which reads as follows:

(U0) Let σ_1 and σ_2 be irreducible unitary representations of the general linear groups $GL(n_1, D)$ and $GL(n_2, D)$, respectively. Then, the

parabolically induced representation $\sigma_1 \times \sigma_2$ of $GL(n_1+n_2, D)$ is irreducible.

The proof of (U0) was finally provided by Sécherre [37], who generalized the theory of types of Bushnel–Kutzko [9] to the case of the general linear group over a p-adic division algebra. Observe that the theory of types can be seen as the internal approach to the representation theory of p-adic groups, as it considers the restrictions, in some sense, to certain open compact subgroups. However, the recent work of Lapid and Mínguez [24] provides the complete proof of the classification of the unitary dual of $GL(n, D)$ in the spirit of Tadić's external approach. Their main point is that the classification is obtained from a weaker version of (U0), and then the original (U0) is a consequence of the classification. We mention some other contributions of Tadić to further understanding of the representation theory of general linear groups over division algebras and their relation to the representation theory of general linear groups over fields [75], [67], [78]. Since special linear groups are closely related to general linear groups, as their derived subgroups, their representation theories are closely related, and the exact form of it was elaborated by Tadić in [54]. The external approach also led to several contributions of Tadić to the representation theory of classical p-adic groups [62], [61], [63], [31], [59], [64].

* * *

Let us now describe in more detail the external approach to the representation theory of the general linear group and classical groups over a p-adic field, which is one of the reoccurring themes in the work of Tadić.

Let $\mathcal{R}_n$ denote the category of representations of $GL(n, F)$ of finite length. Let R_n be its Grothendieck group, that is, the free Abelian group with the $\mathbb{Z}$-basis consisting of the set of isomorphism classes of irreducible representations of $GL(n, F)$. The canonical map from the category $\mathcal{R}_n$ to its Grothendieck group R_n is called semi-simplification and denoted simply by s. s., as in Section 2. Given an object π in $\mathcal{R}_n$, its semi-simplification is the sum

$$\text{s. s.}(\pi) = \sigma_1 + \cdots + \sigma_\ell,$$

where $\sigma_1, \ldots, \sigma_\ell$ are the (possibly isomorphic) irreducible subquotients of π, and ℓ is the length of π. Let

$$R = \bigoplus_{n=0}^{\infty} R_n$$

be the sum of Grothendieck groups, which carries the structure of a $\mathbb{Z}_{\geq 0}$-graded Abelian group. Note that we set $GL(0, F)$ to be the trivial group, and the basis of R_0 is the trivial representation of the trivial group $GL(0, F)$.

The multiplication on R is defined using parabolic induction. Given two irreducible representations $\pi_1 \in R_{n_1}$ and $\pi_2 \in R_{n_2}$ of the general linear groups $GL(n_1, F)$ and $GL(n_2, F)$, respectively, their product $\pi_1 \times \pi_2$ is an element

of the Grothedieck group $R_{n_1+n_2}$, i.e., a representation of $GL(n_1+n_2,F)$, defined using parabolic induction as

$$\pi_1 \times \pi_2 = \text{s. s.} \left(\text{Ind}_{P_{(n_1,n_2)}}^{GL(n,F)} (\pi_1 \otimes \pi_2) \right),$$

where $P_{(n_1,n_2)}$ is the parabolic subgroup of $GL(n_1+n_2,F)$ with the Levi subgroup isomorphic to the product $GL(n_1,F) \times GL(n_2,F)$. The multiplication is then extended to arbitrary elements of R by $\mathbb{Z}$-linearity. The resulting multiplication map

$$m : R \otimes R \to R$$

is a $\mathbb{Z}$-linear map of $\mathbb{Z}_{\geq 0}$-graded Abelian groups. According to the properties of parabolic induction, the multiplication m gives rise to the structure of $\mathbb{Z}_{\geq 0}$-graded $\mathbb{Z}$-algebra on R. The unit element is the trivial representation $\mathbf{1}$ of the trivial group $GL(0,F)$, which may be viewed as a map $e : \mathbb{Z} \to R$ given by the assignment $e(k) = k\mathbf{1}$ for every integer $k \in \mathbb{Z}$.

Similarly, the comultiplication on R is defined in terms of Jacquet modules. Given an irreducible representation $\pi \in R_n$ of the general linear group $GL(n,F)$, the coproduct of π is defined using Jacquet modules as

$$m^*(\pi) = \sum_{k=0}^{n} \text{s. s.} \left(r_{M_{(k,n-k)}}^{GL(n,F)} (\pi) \right),$$

where $M_{(k,n-k)} \cong GL(k,F) \times GL(n-k,F)$ is the Levi subgroup of the parabolic subgroup $P_{(k,n-k)}$ of $GL(n,F)$, and $r_{M_{(k,n-k)}}^{GL(n,F)}$ stands for the Jacquet module with respect to $P_{(k,n-k)}$, as above. The summands on the right-hand side are elements of $R_k \otimes R_{n-k}$, so that their sum is in the tensor product $R \otimes R$. The definition of m^* is extended to all of R by $\mathbb{Z}$-linearity. In other words,

$$m^* : R \to R \otimes R$$

is a comultiplication on R. It is coassociative due to the transitivity of Jacquet modules. The counit element in R is the $\mathbb{Z}$-linear map $e^* : R \to \mathbb{Z}$, defined on the $\mathbb{Z}$-basis of R by the assignment

$$e^*(\pi) = \begin{cases} 1, & \text{if } \pi = \mathbf{1}, \\ 0, & \text{otherwise,} \end{cases}$$

where π is an irreducible representation of $GL(n,F)$, and $\mathbf{1}$ denotes the trivial representation of the trivial group $GL(0,F)$. The comultiplication and counit give rise to the structure of $\mathbb{Z}_{\geq 0}$-graded $\mathbb{Z}$-coalgebra on R.

The algebra and coalgebra structures on R are compatible in the sense that the comultiplication is an algebra homomorphism of R and $R \otimes R$, or equivalently, the multiplication is the coalgebra homomorphism of $R \otimes R$ and R. This fact means that R exhibits a bialgebra structure. The final ingredient for the Hopf algebra is an anti-involution ϑ on R such that

$$m \circ (id \otimes \vartheta) \circ m^* = e \circ e^*.$$

It turns out that there is a unique such ϑ.

The Hopf algebra structure on R is a strong tool for the study of representation theory of $GL(n,F)$. However, the theory of derivatives of Gel′fand and Kazhdan [16] was historically the main tool for the study of representations of the general linear group over a p-adic field. Nevertheless, the external approach, as pursued by Tadić, led to the classification of the unitary dual of the general linear group over all local fields, including archimedean local fields, as well as over division algebras over local fields. Moreover, the external approach provided a unified proof of the classification of the unitary dual of the general linear group over all local fields and division algebras over local fields.

We proceed now to the external approach to the representation theory of classical p-adic groups. For simplicity of exposition, we stick to the cases of the symplectic and odd special orthogonal p-adic groups. Let G_n denote either the symplectic group $Sp(2n,F)$, or the odd special orthogonal group $SO(2n+1,F)$, over a p-adic field F. We follow closely the exposition in [59].

Similarly as in the case of the general linear group, let $\mathcal{R}_n(G)$ be the category of representations of G_n of finite length. Let $R_n(G)$ denote the Grothendieck group of $\mathcal{R}_n(G)$. It is a free Abelian group with the $\mathbb{Z}$-basis consisting of isomorphism classes of irreducible representations of G_n. Let

$$R(G)=\bigoplus_{n=0}^{\infty} R_n(G).$$

It is a $\mathbb{Z}_{\geq 0}$-graded Abelian group. For $n=0$, the group G_0 is the trivial group, and the trivial representation of G_0 is again denoted by $\mathbf{1}$.

The Abelian group $R(G)$ has no multiplicative structure of a $\mathbb{Z}$-algebra. However, since the Levi subgroups of G_n are products of the general linear groups and a smaller classical group of the same type, the parabolic induction gives rise to an R-module structure on $R(G)$. More precisely, given an irreducible representation $\pi \in R_m$ of $GL(m,F)$ and an irreducible representation $\sigma \in R_n(G)$ of G_n, the scalar multiplication $\pi \rtimes \sigma$ is defined using parabolic induction as

$$\pi \rtimes \sigma = \mathrm{s.s.}\left(\mathrm{Ind}_{P_{(m;n)}}^{G_{m+n}}(\pi\otimes\sigma)\right),$$

where $P_{(m;n)}$ is the parabolic subgroup of G_{m+n} with the Levi subgroup isomorphic to the product $GL(m,F)\times G_n$. The result is an element of $R_{m+n}(G)$. Extending the scalar multiplication $\mathbb{Z}$-bilinearly gives rise to the map

$$\mu : R\times R(G)\to R(G),$$

which is a scalar multiplication on $R(G)$ with scalars from R. Thus, the $\mathbb{Z}_{\geq 0}$-graded Abelian group $R(G)$ carries the structure of $\mathbb{Z}_{\geq 0}$-graded R-module.

The R-comodule structure on $R(G)$ is defined as follows. Given an irreducible representation σ of G_n, the scalar comultiplication $\mu^*(\sigma)$ is defined

using Jacquet modules as

$$\mu^*(\sigma) = \sum_{k=0}^{n} \text{s. s.} \left(r^{G_n}_{M_{(k;n-k)}}(\sigma) \right),$$

where $M_{(k;n-k)} \cong GL(k,F) \times G_{n-k}$ is the Levi subgroup of a parabolic subgroup $P_{(k;n-k)}$ of G_n, and $r^{G_n}_{M_{(k;n-k)}}$ is the Jacquet module with respect to $P_{(k;n-k)}$. Clearly, $\mu^*(\sigma)$ is an element of $R \otimes R(G)$. The $\mathbb{Z}$-linear extension of μ^* gives rise to the scalar comultiplication as a map

$$\mu^* : R(G) \to R \otimes R(G).$$

Since

$$(1 \otimes \mu^*) \circ \mu^* = (m^* \otimes 1) \circ \mu^*$$

as maps from $R(G)$ to $R \otimes R \otimes R(G)$, it follows that μ^* is coassociative. The R-comodule structure on $R(G)$ is also $\mathbb{Z}_{\geq 0}$-graded.

So far, we have the R-module and R-comodule structures on $R(G)$, given by μ and μ^*, respectively. In order to have the Hopf R-module structure on $R(G)$, it is required that μ and μ^* are compatible in the sense that $\mu^* : R(G) \to R \otimes R(G)$ is a homomorphism of R-modules with the R-module structure on $R \otimes R(G)$ given by the comultiplication m^* on R. More precisely, given $r_0 \in R$ and $r \otimes s$ in $R \otimes R(G)$, the scalar multiplication is defined as

$$r_0 .(r \otimes s) = m^*(r_0)(r \otimes s),$$

where the multiplication by $m^*(r_0)$ on the right-hand side is given by the $R \otimes R$-module structure on $R \otimes R(G)$ defined by m on the first and by μ on the second factor. However, it turns out that this requirement for the Hopf R-module structure on $R(G)$ is not satisfied. This fact can be observed by looking at the representation theoretic consequences, which the Hopf R-module structure on $R(G)$ would imply. A simple argument leading to contradiction is given in [59, Rmk. 7.3].

Hence, it is necessary to introduce certain twisted variant of the Hopf R-module structure on $R(G)$. This is achieved by twisting the R-module structure on $R \otimes R(G)$ in the definition of the Hopf R-module. More precisely, the m^* in the definition of the scalar multiplication on $R \otimes R(G)$ by scalars in R should be replaced with another ring homomorphism from R to $R \otimes R$. This homomorphism is denoted by M^* and defined as follows. Let $\sim$ stand for the contragredient operator on irreducible representations of general linear groups, extended $\mathbb{Z}$-linearly to all of R. It is an automorphism of $\mathbb{Z}$-algebra R. Let t be the ring endomorphism on $R \otimes R$ which interchanges the two factors, i.e., $t(r_1 \otimes r_2) = r_2 \otimes r_1$ for $r_1, r_2 \in R$. Then, $M^* : R \to R \otimes R$ is defined as

$$M^* = (m \otimes 1) \circ (\sim \otimes m^*) \circ t \circ m^*.$$

It is a ring homomorphism. The M^*-Hopf R-module structure is defined by the requirement that the comultiplication $\mu^* : R(G) \to R \otimes R(G)$ is a homomorphism of R-modules, where the scalar multiplication on $R \otimes R(G)$ is defined as

$$r_0 .(r \otimes s) = M^*(r_0)(r \otimes s),$$

and the scalar multiplication on the right-hand side is defined as above. One of the main points of the paper [59] is that $R(G)$ is indeed the M^*-Hopf R-module.

The twisted Hopf module structure on $R(G)$ leads to the full and systematic exploitation of the Jacquet module machinery. Together with the geometric lemma and the reducibility criteria mentioned in Section 5, it enabled Tadić to obtain many important results in representation theory and to continue the quest for the unitary dual of classical groups.

7. Unitarizability along the lines

In this section we consider the unitarizability problem for irreducible representations of classical p-adic groups. For our purposes, it is sufficient to have in mind the two classical groups introduced in Section 2, so that $G = Sp(2n, F)$ or $G = SO(2n + 1, F)$. The problem is easily reduced to the case of so-called weakly real representations. This is a technical condition, omitted here, but recalled below in the second part of this section.

Given a weakly real irreducible representation π of G, there is a finite set of representations of classical groups of the same type and smaller (or equal) rank, associated to π by Jantzen [21]. These are denoted by $X_{\rho_i}(\pi)$, indexed by a certain finite set of self-contragredient supercuspidal representations ρ_i of general linear groups. Each $X_{\rho_i}(\pi)$ belongs to a family of representations of the classical groups which is referred to as the line of representations. This is related to the form of their supercuspidal support, but we leave the details for the second part of this section.

Jantzen has already proved in [21] that the passage from π to $X_{\rho_i}(\pi)$ preserves several fundamental properties, such as square-integrability, for instance. The idea of Tadić in this context can be summarized by two questions he posed in [68], see also [80].

Unitarizability along the lines questions (Tadić, [68]). *Let π be a weakly real irreducible representation of G. Let $X_{\rho_i}(\pi)$, for $i = 1, \dots, k$, be the representations associated to π in [21].*

1. ***Preservation of unitarizability:*** *Is it true that π is unitarizable if and only if all $X_{\rho_i}(\pi)$ are unitarizable, i.e., could unitarizability problem be reduced to unitarizability along the lines?*
2. ***Independence of unitarizability:*** *Is it possible to transfer unitarizability results between different lines of representations under certain natural conditions?*

These two questions are somehow the guideline for a possible approach to the unitarizability problem for classical p-adic groups. The affirmative answer to the first question would reduce the unitarizability problem to the unitarizability along the lines, that is, to the unitarizability problem for representations belonging to a line of representations. The affirmative answer to the second question would further reduce the study of unitarizability along the lines to certain special types of lines of representations.

The motivation for these two questions arises from the classification of the unitary dual of general linear groups. In Section 3, we recalled the classification of the unitary dual of the general linear group over a local field. However, the case of the general linear group over a local division algebra, takes a similar form, except that the so-called supercuspidal reducibility is at different points. That is, if ρ and ρ' are supercuspidal representations of general linear groups over a local field, then the induced representation $\rho \times \rho'$ reduces if and only if $\rho' \cong \nu^{\pm 1}\rho$. However, if ρ and ρ' are supercuspidal representations of general linear groups over a local division algebra, then the induced representation $\rho \times \rho'$ reduces if and only if $\rho' \cong \nu^{\pm s_0}\rho$, where s_0 depends on ρ. The latter situation is what inspires the unitarizability along the lines approach. Essentially, the independence of unitarizability would imply that the solution to the unitarizability problem depends only on the point s_0 at which the induced representation reduces.

Although it is still not clear whether the unitarizability along the lines will be the right approach to the unitary dual of classical p-adic groups, it is a great example of Tadić's way of thinking. He always seeks for unifying arguments between different settings which reduce the considered problem to certain fundamental facts. In a way, his approaches are always very structured and uniform.

* * *

Let π be an irreducible representation of the classical p-adic group G_n, as above, where n blue stands for its rank. As already mentioned, the problem of unitarizability of π can be reduced to the case of so-called weakly real representations. This means that there exists a parabolic subgroup Q, with the Levi subgroup isomorphic to the product $GL(n_1, F)\times\cdots\times GL(n_k, F)\times G_{n'}$ with $n_1 + \cdots + n_k + n' = n$, selfcontragredient supercuspidal representations ρ'_i of $GL(n_i, F)$, a supercuspidal representation σ of $G_{n'}$, and real numbers $x_i \in \mathbb{R}$, for $i = 1, \dots, k$, such that π is a subrepresentation of the induced representation

$$\pi \hookrightarrow \operatorname{Ind}_Q^{G_n} \left(\nu^{x_1}\rho'_1 \otimes \nu^{x_2}\rho'_2 \otimes \cdots \otimes \nu^{x_k}\rho'_k \otimes \sigma\right).$$

In this situation, we say that σ is the partial supercuspidal support of π. For a given π, such σ is uniquely determined.

Let X be a set of irreducible supercuspidal representations of general linear groups. Assume that $X = \widetilde{X} = \{\widetilde{\rho} : \rho \in X\}$. For an irreducible

representation π of a classical p-adic group, one says that it is supported by $X \cup \{\sigma\}$ if there exist $\rho_i \in X$ such that π is a subrepresentation of the induced representation

$$\pi \hookrightarrow \mathrm{Ind}_P^{G_n}(\rho_1 \otimes \cdots \otimes \rho_k \otimes \sigma),$$

where P is an appropriate parabolic subgroup of G_n.

Let ρ be an irreducible selfcontragredient supercuspidal representation of a general linear group. We define the line X_ρ of supercuspidal representations associated to ρ as

$$X_\rho = \{\nu^x \rho : x \in \mathbb{R}\}.$$

We denote by $\mathrm{Irr}(X_\rho, \sigma)$ the set of all isomorphism classes of irreducible representations of the considered classical groups supported by $X_\rho \cup \{\sigma\}$.

For the given weakly real irreducible representation π of the classical group G_n and an irreducible selfcontragredient supercuspidal representation ρ of a general linear group, there exists a representation of the classical group $G_{m'}$ of rank $m' \leq n$, denoted by $X_\rho(\pi)$, supported by $X_\rho \cup \{\sigma\}$ and an irreducible representation of the general linear group $GL(m, F)$ with $m + m' = n$, denoted by $X_\rho^c(\pi)$, supported outside of X_ρ, such that π is a subrepresentation of the induced representation

$$\pi \hookrightarrow \mathrm{Ind}_{P_{(m;m')}}^{G_n} \left(X_\rho^c(\pi) \otimes X_\rho(\pi) \right),$$

where $P_{(m;m')}$ is a parabolic subgroup of G_n with the Levi subgroup isomorphic to the product $GL(m, F) \times G_{m'}$.

Obviously, for all but finitely many selfcontragredient ρ, we have that $X_\rho(\pi) \cong \sigma$. Those for which we have $X_\rho(\pi) \ncong \sigma$, we denote by $\rho_1, \ldots, \rho_k$. Jantzen has proved in [21] that the correspondence

$$\pi \leftrightarrow (X_{\rho_1}(\pi), X_{\rho_2}(\pi), \ldots, X_{\rho_k}(\pi))$$

is a bijection between the set of all irreducible representations supported by $X_{\rho_1} \cup \cdots \cup X_{\rho_k} \cup \{\sigma\}$ and the product $\prod_{i=1}^k \mathrm{Irr}(X_{\rho_i}, \sigma)$.

Having all the notation in place, we can now explain more thoroughly the two questions of Tadić raised at the beginning of this section. The question regarding the preservation of unitarizability can be rephrased as the question whether the bijection defined by Jantzen preserves unitarizability. Although Jantzen has shown that this bijection preserves some of the fundamental properties of representations, such as square-integrability, unitarizability is not among them. The affirmative answer to this question would reduce the unitarizability problem to the problem about unitarizability of the representations supported by just one line.

Let us now explain what the question regarding independence of unitarizability means. Assuming that the answer to the first question is positive, the unitarizability question reduces to the question about the unitarizability

of the representations supported by just one line. The independence of unitarizability question asks whether it could be that the unitarizable representations supported in two different lines, but additionally satisfying a natural assumption, have totally analogous description. More precisely, given a self-contragredient supercuspidal representation ρ of a general linear group and a supercuspidal representation σ of a classical group, as above, there exists a unique $\alpha_{\rho,\sigma} \in \mathbb{R}_{\geq 0}$ such that

$$\nu^{\alpha_{\rho,\sigma}} \rho \rtimes \sigma$$

reduces. Moreover, since the characteristic of the p-adic field F is zero, it follows from the work of Arthur and Mœglin [86] that $\alpha_{\rho,\sigma} \in \frac{1}{2}\mathbb{Z}$. If there is another pair ρ', σ' such that $\alpha_{\rho,\sigma} = \alpha_{\rho',\sigma'}$, there is a canonical bijection

$$E : \mathrm{Irr}(X_\rho, \sigma) \to \mathrm{Irr}(X_{\rho'}, \sigma').$$

The second question now pertains to the following question: is it true that $\pi \in \mathrm{Irr}(X_\rho, \sigma)$ is unitarizable if and only if $E(\pi) \in \mathrm{Irr}(X_{\rho'}, \sigma')$ is unitarizable?

The evidence for the positive answer to both of these questions of Tadić is provided by the case of generic representations [25] and unramified representations [35].

8. Topology of the unitary dual

A keen interest in the topology and geometry of the unitary and non-unitary duals of reductive groups is a common thread in Tadić's work for decades [41], [50], [48], [42], [51], [39], [73]. Some observations and findings obtained from the topology of these duals of reductive algebraic groups, both p-adic and real, were the primary motivation for future studies in harmonic analysis on these groups. These findings, in turn, informed very interesting arithmetic interpretations.

Although the following considerations are valid for any reductive algebraic group over a local field, for simplicity of exposition we consider only the groups G introduced in Section 2 over a p-adic field F.

Let $\widehat{G}$ denote the unitary dual of G, that is, the set of isomorphism classes of unitarizable irreducible representations of G. Then, $\widehat{G}$ is naturally a topological space with the topology as defined below in the second part of this section.

Let $\widetilde{G}$ denote the non-unitary dual of G, that is, the set of isomorphism classes of all irreducible representations of G. Certain convenient characterization of the topology on $\widehat{G}$ in terms of convergence of matrix coefficients can be used to define a topology on $\widetilde{G}$. It turns out that $\widehat{G}$ is closed in $\widetilde{G}$. Tadić has also shown many different characterizations of this topology on $\widetilde{G}$. In particular, this is exactly the topology introduced by Fell in [14].

It turns out, as Tadić observed, that even if one is only interested in the unitary dual $\widehat{G}$, certain knowledge of $\widetilde{G}$ is indispensable. For example, the

reducibility of the parabolically induced representations can be formulated in terms of number of limits of certain converging sequences in the non-unitary dual $\widetilde{G}$, see [50] for more details. Note that the topology of $\widetilde{G}$ is not Hausdorff. The irreducibility and reducibility of the parabolic induction is crucial in the determination of complementary series representation and parabolic reduction arguments, which are both very important in the determination of the unitary dual.

To support these claims, consider the general linear group $GL(n, F)$. Let $u(\delta, k)$ be the Speh representation, defined in Section 3, where δ is a square-integrable representation of $GL(m, F)$ and k a positive integer such that $km = n$. The Tadić classification of the unitary dual of $GL(n, F)$, recalled in Section 3, implies that the Speh representation $u(\delta, k)$ is unitarizable, as well as the induced representation $\nu^{\alpha}u(\delta, k) \times \nu^{-\alpha}u(\delta, k)$ for $\alpha \in \langle 0, \frac{1}{2}\rangle$. The latter is an example of a complementary series representation. The irreducibility of the induced representation for α in that range is crucial for its unitarizability.

On the other hand, one of the local ways to establish the unitarizability of the Speh representations $u(\delta, k)$ is by induction over k. For $k = 1$, the Speh representation is just $u(\delta, 1) = \delta$, which is unitary. Observing that $u(\delta, k-1) \times u(\delta, k+1)$ appears as a subquotient of $\nu^{\alpha}u(\delta, k) \times \nu^{-\alpha}u(\delta, k)$ at $\alpha = \frac{1}{2}$, i.e., at the end of the complementary series, together with the fact that $u(\delta, k-1) \times u(\delta, k+1)$ is irreducible, parabolic reduction gives that $u(\delta, k+1)$ must be unitarizable, as well. This illustrates the importance of reducibility and irreducibility information to gain knowledge about the unitary dual.

From the Tadić classification of the unitary dual of $GL(n, F)$, recalled in Section 3, it is transparent what a prominent role the Speh representations have. They appear to be the building blocks for the unitary dual, by using relatively simple procedures like parabolic induction or formation of the complementary series. On the other hand, they are isolated in the unitary dual of $GL(n, F)$, except in the special cases of $k = 2$ and of δ attached to a segment of length two. The idea of Tadić that this topological property is what makes them very important in the construction of the whole unitary dual turned out to be very fruitful. They are indeed the building blocks for the unitary dual of the general linear groups, both in the archimedean and p-adic case, and, in both cases, they are topologically isolated. On the other hand, cohomological representations are very rare in the p-adic case, unlike in the real case, so that the cohomological argument does not, at least not in a straightforward manner, bring a unifying argument. However, as we have just seen, topology of the unitary dual does! For the record, this is another example of the Lefschetz principle, described in Section 4, present in the work of Tadić.

His philosophy that it is very important to find isolated representations in the appropriate duals gave important results in different contexts. For example, for a general reductive group G over a p-adic field, it is proved in [50]

that the representation π is isolated modulo center in $\widetilde{G}$ if and only if it is supercuspidal. It is also known that the isolated representations in $L^2(G)$, in which the support in the corresponding direct integral decomposition consists of tempered representations, are precisely square-integrable representations [18]. In both cases, we see that all the representations isolated in the appropriate unitary duals have certain direct characterization in the harmonic analysis on that group.

Topological consideration of various other types of duals, especially those arising from the setting of adèlic groups, such as the automorphic dual and Ramanujan dual at the local place, yield striking arithmetic information. Tadić pursued these ideas and obtained interesting arithmetic consequences, which we elaborate below.

* * *

We begin the technical part of this section with a definition of topology on the unitary dual $\widehat{G}$, where G is one of the groups introduced in Section 2. Let $\mathcal{C}_0(G)$ denote the convolution algebra of locally constant compactly supported functions on G. One can introduce a norm on $\mathcal{C}_0(G)$ in the following way

$$||f|| = \sup\{||\pi(f)|| : \pi \in \widehat{G}\},$$

where $f \in \mathcal{C}_0(G)$, and the norm on the right-hand side is the operator norm. Recall that $\pi(f)$ is defined as

$$\pi(f)v = \int_G f(g)\pi(g)v \, dg,$$

where v is a vector in the space on which π acts, and dg is a Haar measure on G.

Let $C^*(G)$ be the completion of $\mathcal{C}_0(G)$ with respect to this norm. It is a C^* algebra. We denote by $\widehat{C^*(G)}$ the set of isomorphism classes of all non-zero representations of $C^*(G)$. This set is in bijection with $\widehat{G}$. We define topology on the set $\widehat{C^*(G)}$ using the canonical epimorphism

$$\widehat{C^*(G)} \to \mathrm{Prim}(C^*(G)),$$

given by the assignment $\pi \mapsto \ker\pi$, to the set $\mathrm{Prim}(C^*(G))$ of primitive ideals of $C^*(G)$ equipped with the Jacobson topology. The topology on $\widehat{C^*(G)}$ is then defined as the weakest topology in which this epimorphism is continuous. Because of the aforementioned bijection, this also defines topology on $\widehat{G}$.

It is important to observe that the same procedure could not be conducted for the non-unitary dual $\widetilde{G}$ of G. However, the topology on $\widehat{G}$ can be described in terms of convergence of matrix coefficients. This characterization of topology can be carried over to define topology on $\widetilde{G}$. As already mentioned, Tadić studied this topology extensively, and proved several characterizations, and in particular showed that it is precisely the Fell topology introduced in [14].

The idea of Tadić is that representations isolated in any type of dual of G are of the utmost importance, either for harmonic analysis on G or the arithmetic considerations related to G. The example of Speh representations, which are isolated in the topology of the unitary dual of $GL(n,F)$, is already discussed above. We turn now our attention to arithmetic consequences of topology on various duals. Hence, for the rest of this section, we move to the adèlic setting.

For the moment, up to the end of this section, let F be an algebraic number field, that is, a finite extension of $\mathbb{Q}$. For a given place v of F, let F_v denote the completion of F at v. Let $\mathbb{A}_F$ be the ring of adèles of F. Let G be the classical group or the special linear group defined over F.

The automorphic dual $\widehat{G}_{v,\mathrm{aut}}$ of G at the place v is defined as the support of the representation of $G(F_v)$ acting on $L^2(G(F)\backslash G(\mathbb{A}_F))$ by right translations. Here the support means the support of the corresponding measure in the spectral expansion of $L^2(G(F)\backslash G(\mathbb{A}_F))$ as a direct integral.

On the other hand, $\widehat{G}^1_v$ denotes the unramified dual with respect to the fixed maximal compact subgroup K_v of $G(F_v)$. It is an open subset of the unitary dual $\widehat{G}_v$ of $G(F_v)$. Recall that a representation of $G(F_v)$ is called unramified or spherical if its space contains a K_v-invariant vector. Let $\widehat{G}^1_{v,\mathrm{aut}}$ denote the unramified part of the automorphic dual of G at the place v. Sometimes $\widehat{G}^1_{v,\mathrm{aut}}$ is called the Ramanujan dual of G at the place v.

We remark that $\widehat{G}_{v,\mathrm{aut}}$ is largely unknown, even in the simplest of cases. For example, $\widehat{SL(2)}_{\infty,\mathrm{aut}}$ is largely unknown, but its description entails many important conjectures, e.g., the Selberg $\frac{1}{4}$-conjecture [70], [12]. Following the Tadić philosophy, it is very important to find isolated representations in the topology of $\widehat{G}^1_v$ and $\widehat{G}^1_{v,\mathrm{aut}}$. Note that the isolated representations in $\widehat{G}^1_v$ which are automorphic, are automatically isolated in $\widehat{G}^1_{v,\mathrm{aut}}$, but the converse does not hold in general.

The unramified unitary dual of the groups in question is completely known by [35]. Not only that the whole unramified unitary dual is obtained, but also its isolated points, and, among them, the points which are isolated in the whole unitary dual. On the other hand, motivated by his studies of unipotent automorphic representations, Muić introduces in [33] the negative and strongly negative (unramified) representations. Roughly, they are unramified representations which satisfy the conditions on Jacquet modules which are opposite to the ones that satisfy tempered and square-integrable representations, respectively, by the Casselman criterion [10]. In other words, they are unramified representations which are Aubert duals (cf. [3] for the definition of Aubert duality) of tempered and square-integrable representations, respectively. We denote by $\widehat{G}^1_{v,\mathrm{neg}}$ the negative representations in the unramified

unitary dual. Muić proved that the strongly negative representations are local components of the automorphic representations [34]. Furthermore, it is proved in [70] that

$$\widehat{G}^1_{v,\mathrm{neg}} \subseteq \widehat{G}^1_{v,\mathrm{aut}},$$

that is, all the negative unramified representations of $G(F_v)$ are in the Ramanujan dual at v.

We recall now a very significant conjecture of Clozel, known under the name Arthur+ε conjecture [12, Conj. 2]. The unramified representations of $G(F_v)$ are parameterized, via the Satake isomorphism, by the conjugacy classes of semisimple elements in the complex dual group $G^\vee$ of G. Let t_π denote a semisimple representative of the Satake parameter of π. In our unramified setting, the local Arthur parameter is, briefly said, certain admissible homomorphism

$$\psi : W_{F_v} \times SL(2,\mathbb{C}) \to G^\vee,$$

where W_{F_v} is the Weil group of F_v and $G^\vee$ is the complex dual group of G. The Arthur parameter ψ is called unramified and isobaric of weight zero, if $\psi|_{SL(2,\mathbb{C})}$ is algebraic, $\psi|_{I_{F_v}}$ is trivial, where I_{F_v} is the inertia subgroup of W_{F_v}, and ψ maps the Frobenius element $Frob_v$ to a maximal compact subgroup of $G^\vee$.

The Arthur+ε conjecture states, roughly, that if π is an unramified local component of an irreducible automorphic representation, then there exists a parameter ψ, unramified and isobaric of weight zero as above, such that

$$t_\pi = \psi\left(Frob_v, \begin{bmatrix} q_v^{\frac{1}{2}} & 0 \\ 0 & q_v^{-\frac{1}{2}} \end{bmatrix}\right),$$

where q_v is the order of the residue field of F_v.

If one assumes that the Arthur+ε conjecture holds, it follows that

$$\widehat{G}^1_{v,\mathrm{neg}} = \widehat{G}^1_{v,\mathrm{aut}}.$$

This would also give us the complete description of isolated representations in the Ramanujan dual. Namely, [70, Prop. 2.5] then gives that the isolated representations in the Ramanujan dual are precisely all the strongly negative unramified representations.

It is also interesting to note that there is a huge discrepancy in the relationship of the Ramanujan dual and the whole unramified unitary dual between the split classical p-adic group $G(F_v)$, i.e., the symplectic and odd special orthogonal group, and the special linear group $SL(n, F_v)$. Indeed, if one assumes Clozel's Arthur+ε conjecture, there are many more isolated points in $\widehat{G}^1_{v,\mathrm{aut}}$ than in $\widehat{G}^1_v$ in the case of symplectic or odd special orthogonal group $G(F_v)$, because the isolated points in $\widehat{G}^1_{v,\mathrm{aut}}$ would be exactly the strongly negative representations. In that case, for example when $G = Sp(340, F_v)$ of rank 170, as Tadić points out in [70], the number of isolated unramified

representations makes up just $1,93\%$ of the number of strongly negative unramified representations. In the case of $SL(n, F_v)$, these numbers coincide, and are both equal to one.

We mention now two more important instances of the explicit use of the topology of the unitary dual of p-adic reductive groups. The first is the convergence in the unitary dual [41], which is instrumental in the proof of the Tadić classification of the unitary dual of $GL(n, F)$ for a p-adic field F in [46]. More precisely, it is used in the Appendix to prove some crucial claims without referring to the properties of the Zelevinsky–Aubert involution [3], [4], which were still unknown at that time. The second use of topology is to obtain bounds for appearance of unitarizable subquotients in the parabolically induced representations [79].

The notion of a rigid representation is introduced in the setting of representations of general linear groups. The set of rigid unitarizable representations is defined as the set of isomorphism classes of all irreducible unitary representations which are induced from the Speh representations, but without complementary series. It turns out that one of the consequences of the generalized Ramanujan conjecture would be equality of the automorphic and rigid duals for the general linear group, with Speh representations as the only ones isolated in the topology of the automorphic dual. A certain partial generalization of this notion is possible for the classical p-adic groups. These topological consideration lead us to the final topic of the paper in the section that follows.

9. Interplay of Arthur packets and unitarizability

This idea is the most recent line of thought in the work Tadić. In the classification of the unitary dual of p-adic groups, the point of departure is the so-called supercuspidal reducibility as in Section 7. The final goal is to determine the unitary dual in terms of supercuspidal reducibilities as parameters. In that quest, the most difficult step is the study of parabolically induced representations at the so-called critical points.

On the other hand, local Arthur packets are defined as the sets of possible local components of the automorphic representations in the global Arthur packets [1]. The latter are candidates for representations in the spectral decomposition of the discrete part of the space of L^2 automorphic forms on the adèlic group, and thus, necessarily unitarizable. Briefly said, members of local Arthur packets form a family of unitarizable representations of G. The representations in this family are sometimes referred to as the representations of Arhtur's type.

According to Tadić, the interplay between the representations at critical points and those of Arthur's type, could be the crucial ingredient in the understanding of unitary duals of classical p-adic groups. These representations

also seem to be distinguished in terms of the topology of the unitary dual introduced in Section 8. These expectations can be formulated by the following conjecture of Tadić [81].

Conjecture on unitarizability and Arthur packets (Tadić, [81]). *Let π be an irreducible representation of the classical p-adic group G.*

1. *Suppose that π is an irreducible subquotient at a critical point. Then the following two claims are equivalent:*
   (a) *π is unitarizable.*
   (b) *π is a member of a local Arthur packet.*
2. *If π is an isolated representation in the unitary dual, then π is a representation at a critical point.*
3. *Each isolated representation π in the unitary dual is a member of a local Arthur packet.*

The support for the validity of this conjecture Tadić has found in three cases: the corank three case [82], in the case of the generic unitary dual [25] and in the case of unramified unitary dual [35]. We end with a quote from [81] regarding the conjecture:

"[...] the above conjecture expects that in the case of the critical points, which is the most delicate part of the unitarizability, the mysterious line between unitarizability and non-unitarizability is drawn by Arthur packets. It may easily happen that the above conjecture is not true, but still we expect that this approach of thinking is in a good direction. This conjecture may be very hard to prove (if it is true)."

* * *

In the rest of this section, we introduce the technical notions required for better understanding of the Tadić conjecture above. It is still assumed, for simplicity, that the group G is one of the classical p-adic groups introduced in Section 2.

We begin with the definition of critical points. Given an irreducible supercuspidal representation ρ of the general linear group, there is a unique real number $e(\rho)$, referred to as the exponent of ρ, and a unitary irreducible supercuspidal representation ρ^u such that $\rho \cong \nu^{e(\rho)}\rho^u$. Recall that a segment $[a,b]$ is a sequence of real numbers of the form $a, a+1, a+2, \dots, b$, where $b-a+1$ is a positive integer. Given a unitary irreducible supercuspidal representation ρ^u and an irreducible supercuspidal representation σ of the classical group, there exists a unique non-negative real number $\alpha_{\rho^u,\sigma} \geq 0$ such that the induced representation

$$\nu^{\pm\alpha_{\rho^u,\sigma}}\rho^u \rtimes \sigma$$

reduces. This was already used in Section 7.

Let $\rho_1, \dots, \rho_k$ be irreducible supercuspidal representations of general linear groups, and σ an irreducible supercuspidal representation of G. Assume that for each $i \in \{1, 2, \dots, k\}$ the following holds :

- ρ_i^u is selfcontragredient, i.e., $\rho_i^u \cong \widetilde{\rho_i^u}$,
- the multiset $\{e(\rho_j) : \rho_j^u \cong \rho_i^u\}$ of exponents, which can be assumed to be non-negative, is such that the underlying set forms a segment in $\frac{1}{2}\mathbb{Z}$,
- the set of exponents from the previous point contains the reducibility exponent $\alpha_{\rho_i^u,\sigma}$.

Then, the induced representation $\rho_1 \times \rho_2 \times \cdots \times \rho_k \rtimes \sigma$ is referred to as the representation at the critical point, or of critical type. Any irreducible subquotient π of that induced representation is then called the irreducible subquotient at the critical point.

In order to proceed towards the conjecture of Tadić, we recall of the representations of Arthur's type. They are the local constituents of the global Arthur packets, which parameterize, according to Arthur's fundamental work [1], possible automorphic representations in the discrete part of the spectral decomposition of L^2 automorphic forms on the adèlic group. The explicit construction of the representations in the local Arthur packets, i.e., of Arthur's type, over a p-adic field is done mostly by Mœglin in a series of papers culminating with [30], [29], [85], [2].

In Section 8, we used a special form of Arthur packets which is appropriate to deal with unramified representations. We now recall a more general definition for the considered groups, which are all split. The local Arthur parameter for the split classical p–adic group G in question is a homomorphism

$$\psi : W_F \times SL(2, \mathbb{C}) \times SL(2, \mathbb{C}) \to G^\vee$$

subject to certain technical requirements, where W_F is the Weil group of F and $G^\vee$ is the complex dual group of G. The local Arthur packet attached to this parameter is a finite multiset, which is actually a set in the considered cases according to [30], of irreducible representations of G subject to certain character relations.

We would like to point out that one of the main initial ingredients of Mœglin's construction of local Arthur packets is the Mœglin–Tadić classification of the square-integrable representations of classical p-adic groups [28], [31]. In their joint work, as a motivation, Tadić used the following idea to construct irreducible summands in the L-parameter attached to square-integrable representations. Assume that σ is an irreducible square-integrable representation of a classical group and ρ a selfcontragredient irreducible supercuspidal representation of a general linear group. Tadić examined, for a positive integer a, the following induced representation

$$\mathrm{Ind}_P^G(\delta[\nu^{-\frac{a-1}{2}}\rho, \nu^{\frac{a-1}{2}}\rho] \otimes \sigma),$$

where $\delta[\nu^{-\frac{a-1}{2}}\rho, \nu^{\frac{a-1}{2}}\rho]$ is the square-integrable representation attached to the segment $[\nu^{-\frac{a-1}{2}}\rho, \nu^{\frac{a-1}{2}}\rho]$ as in Section 2. It turns out that for one parity of a, this representation is never reducible, and for almost all a of the other parity, it is reducible. The finite set of exceptions to reducibility will form the summands $\rho \otimes S_a$ in the Langlands parameter of σ, where S_a is the unique a-dimensional irreducible representation of $SL(2, \mathbb{C})$. This idea, that one can describe the summands in the L-parameter of a representation, thus, the object exhibiting both analytical and arithmetical properties, in terms of reducibility of parabolically induced representations, came from the case of the general linear group. Of course, one had to ensure that this candidate for L-parameter indeed satisfies all the required properties.

Acknowledgements.

Both authors (N.G. & M.H.) are supported by the Croatian Science Foundation project HRZZ-IP-2022-10-4615. The first named author (N.G.) is also supported by the Croatian Science Foundation project HRZZ-IP-2019-04-4216.

References

[1] J. Arthur, The endoscopic classification of representations. Orthogonal and symplectic groups, American Mathematical Society Colloquium Publications, vol. **61**, American Mathematical Society, Providence, RI, 2013.

[2] H. Atobe, *Construction of local A-packets*, J. Reine Angew. Math. **790** (2022), 1–51.

[3] A.-M. Aubert, *Dualité dans le groupe de Grothendieck de la catégorie des représentations lisses de longueur finie d'un groupe réductif p-adique*, Trans. Amer. Math. Soc. **347** (1995), 2179–2189.

[4] A.-M. Aubert, *Erratum to "Dualité dans le groupe de Grothendieck de la catégorie des représentations lisses de longueur finie d'un groupe réductif p-adique"*, Trans. Amer. Math. Soc. **348** (1996), 4687–4690.

[5] A. I. Badulescu and D. A. Renard, *Sur une conjecture de Tadić*, Glas. Mat. Ser. III **39** (2004), 49–54.

[6] E. M. Baruch, *A proof of Kirillov's conjecture*, Ann. of Math. (2) **158** (2003), 207–252.

[7] I. N. Bernstein and A. V. Zelevinsky, *Induced representations of reductive* $\mathfrak{p}$*-adic groups. I*, Ann. Sci. École Norm. Sup. (4) **10** (1977), 441–472.

[8] C. Blondel, *Covers and propagation in symplectic groups*, in: Functional analysis IX, Various Publ. Ser. (Aarhus), vol. **48**, Univ. Aarhus, Aarhus, 2007, pp. 16–31.

[9] C. J. Bushnell and P. C. Kutzko, The admissible dual of GL(N) via compact open subgroups, Annals of Mathematics Studies, vol. **129**, Princeton University Press, Princeton, NJ, 1993.

[10] W. Casselman, Introduction to the theory of admissible representations of p-adic reductive groups, unpublished notes, 1995.

[11] G. Chenevier and D. Renard, *Characters of Speh representations and Lewis Carroll identity*, Represent. Theory **12** (2008), 447–452.

[12] L. Clozel, *Spectral theory of automorphic forms*, in: Automorphic forms and applications, IAS/Park City Math. Ser., vol. **12**, Amer. Math. Soc., Providence, RI, 2007, pp. 43–93.

[13] D. K. Faddéev, *Complex representations of the general linear group over a finite field*, in: Modules and representations, Zap. Naučn. Sem. Leningrad. Otdel. Mat. Inst. Steklov. (LOMI) **46** (1974), 64–88 (Russian),
[14] J. M. G. Fell, *Non-unitary dual spaces of groups*, Acta Math. **114** (1965), 267–310.
[15] I. M. Gel′fand and M. A. Neumark, Unitäre Darstellungen der klassischen Gruppen, Math. Lehrbücher Monogr., II. Abt., Math. Monogr., vol. **6**, Akademie-Verlag, Berlin, 1957.
[16] I. M. Gel′fand and D. A. Každan, *Representations of the group* $\mathrm{GL}(n, K)$ *where* K *is a local field*, Funkcional. Anal. i Priložen. **6** (1972), no. 4, 73–74.
[17] M. Hanzer and M. Tadić, *A method of proving non-unitarity of representations of p-adic groups. I*, Math. Z. **265** (2010), 799–816.
[18] Harish-Chandra, *Integrable and square-integrable representations of a semi-simple Lie group*, Proc. Natl. Acad. Sci. USA **41** (1955), 314–317.
[19] Harish-Chandra, Harmonic analysis on reductive p-adic groups, Lecture Notes in Math., Vol. **162**, Springer-Verlag, Berlin-New York, 1970.
[20] H. Jacquet, *Représentations des groupes linéaires p-adiques*, in: Theory of group representations and Fourier analysis (Centro Internaz. Mat. Estivo (C.I.M.E.), II Ciclo, Montecatini Terme, 1970), Centro Internazionale Matematico Estivo (C.I.M.E.), Ed. Cremonese, Rome, 1971, pp. 119–220.
[21] C. Jantzen, *On supports of induced representations for symplectic and odd-orthogonal groups*, Amer. J. Math. **119** (1997), 1213–1262.
[22] A. A. Kirillov, *Infinite-dimensional representations of the complete matrix group*, Dokl. Akad. Nauk SSSR **144** (1962), 37–39 (Russian).
[23] E. Lapid and A. Mínguez, *On a determinantal formula of Tadić*, Amer. J. Math. **136** (2014), 111–142.
[24] E. Lapid and A. Mínguez, *On parabolic induction on inner forms of the general linear group over a non-archimedean local field*, Selecta Math. (N.S.) **22** (2016), 2347–2400.
[25] E. Lapid, G. Muić and M. Tadić, *On the generic unitary dual of quasisplit classical groups*, Int. Math. Res. Not. **2004** (2004), 1335–1354.
[26] E. Lapid and M. Tadić, *Some results on reducibility of parabolic induction for classical groups*, Amer. J. Math. **142** (2020), 505–546.
[27] I. Matić and M. Tadić, *On Jacquet modules of representations of segment type*, Manuscripta Math. **147** (2015), 437–476.
[28] C. Mœglin, *Sur la classification des séries discrètes des groupes classiques p-adiques: paramètres de Langlands et exhaustivité*, J. Eur. Math. Soc. (JEMS) **4** (2002), 143–200.
[29] C. Mœglin, *Paquets d'Arthur discrets pour un groupe classique p-adique*, in: Automorphic forms and L-functions II. Local aspects, Contemp. Math., vol. **489**, Amer. Math. Soc., Providence, RI, 2009, pp. 179–257.
[30] C. Mœglin, *Multiplicité 1 dans les paquets d'Arthur aux places p-adiques*, in: On certain L-functions, Clay Math. Proc., vol. **13**, Amer. Math. Soc., Providence, RI, 2011, pp. 333–374.
[31] C. Mœglin and M. Tadić, *Construction of discrete series for classical p-adic groups*, J. Amer. Math. Soc. **15** (2002), 715–786.
[32] A. Moy and M. Tadić, *The Bernstein center in terms of invariant locally integrable functions*, Represent. Theory **6** (2002), 313–329.
[33] G. Muić, *On the non-unitary unramified dual for classical p-adic groups*, Trans. Amer. Math. Soc. **358** (2006), 4653–4687.
[34] G. Muić, *On certain classes of unitary representations for split classical groups*, Canad. J. Math. **59** (2007), 148–185.

[35] G. Muić and M. Tadić, *Unramified unitary duals for split classical p-adic groups; the topology and isolated representations*, in: On certain L-functions, Clay Math. Proc., vol. **13**, Amer. Math. Soc., Providence, RI, 2011, pp. 375–438.
[36] P. J. Sally, Jr. and M. Tadić, *Induced representations and classifications for* $\mathrm{GSp}(2,F)$ *and* $\mathrm{Sp}(2,F)$, Mém. Soc. Math. France (N.S.) (1993), no. 52, 75–133.
[37] V. Sécherre, *Proof of the Tadić conjecture (U0) on the unitary dual of* $GL_m(D)$, J. Reine Angew. Math. **626** (2009), 187–203.
[38] M. Tadić, Harmonijska analiza sferičkih funkcija na reduktivnim grupama nad lokalnim poljima, doctoral dissertation (Ph.D.), University of Zagreb, 1980 (Croatian).
[39] M. Tadić, *The C*-algebra of SL(2,k)*, Glas. Mat. Ser. III **17** (1982), 249–263.
[40] M. Tadić, *Harmonic analysis of spherical functions on reductive groups over p-adic fields*, Pacific J. Math. **109** (1983), 215–235.
[41] M. Tadić, *The topology of the dual space of a reductive group over a local field*, Glas. Mat. Ser. III **18** (1983), 259–279.
[42] M. Tadić, *Dual spaces of adelic groups*, Glas. Mat. Ser. III **19** (1984), 39–48.
[43] M. Tadić, *Proof of a conjecture of Bernstein*, Math. Ann. **272** (1985), 11–16.
[44] M. Tadić, *Unitary dual of p-adic GL(n). Proof of Bernstein conjectures*, Bull. Amer. Math. Soc. (N.S.) **13** (1985), 39–42.
[45] M. Tadić, Unitary representations of general linear group over real and complex field, MPIM Preprint Series (1985), no. **22**, 98 pages.
[46] M. Tadić, *Classification of unitary representations in irreducible representations of general linear group (non-Archimedean case)*, Ann. Sci. École Norm. Sup. (4) **19** (1986), 335–382.
[47] M. Tadić, *Spherical unitary dual of general linear group over non-archimedean local field*, Ann. Inst. Fourier (Grenoble) **36** (1986), no. 2, 47–55.
[48] M. Tadić, *Topology of unitary dual of non-archimedean GL(n)*, Duke Math. J. **55** (1987), 385–422.
[49] M. Tadić, *Unitary representations of* $\mathrm{GL}(n)$*, derivatives in the non-Archimedean case*, V. Mathematikertreffen Zagreb-Graz (Mariatrost/Graz, 1986), Ber. Math.-Statist. Sekt. Forschungsgesellsch. Joanneum, Forschungszentrum Graz, Graz, 1987, Ber. No. **281**, pp. 274–282
[50] M. Tadić, *Geometry of dual spaces of reductive groups (non-Archimedean case)*, J. Analyse Math. **51** (1988), 139–181.
[51] M. Tadić, *On limits of characters of irreducible unitary representations*, Glas. Mat. Ser. III **23** (1988), 15–25.
[52] M. Tadić, *Induced representations of GL(n,A) for p-adic division algebras A*, J. Reine Angew. Math. **405** (1990), 48–77.
[53] M. Tadić, *On Jacquet modules of induced representations of p-adic symplectic groups*, in: Harmonic analysis on reductive groups (Brunswick, ME, 1989), Progr. Math., vol. **101**, Birkhäuser Boston, Boston, MA, 1991, pp. 305–314.
[54] M. Tadić, *Notes on representations of non-Archimedean* $SL(n)$, Pacific J. Math. **152** (1992), 375–396.
[55] M. Tadić, *An external approach to unitary representations*, Bull. Amer. Math. Soc. (N.S.) **28** (1993), 215–252.
[56] M. Tadić, *Representations of classical p-adic groups*, in: Representations of Lie groups and quantum groups (Trento, 1993), Pitman Res. Notes Math. Ser., vol. **311**, Longman Sci. Tech., Harlow, 1994, pp. 129–204.
[57] M. Tadić, *Representations of p-adic symplectic groups*, Compositio Math. **90** (1994), 123–181.
[58] M. Tadić, *On characters of irreducible unitary representations of general linear groups*, Abh. Math. Sem. Univ. Hamb. **65** (1995), 341–363.

[59] M. Tadić, *Structure arising from induction and Jacquet modules of representations of classical p-adic groups*, J. Algebra **177** (1995), 1–33.
[60] M. Tadić, *Correspondence on characters of irreducible unitary representations of* $GL(n,\mathbb{C})$, Math. Ann. **305** (1996), 419–438.
[61] M. Tadić, *Jacquet modules and induced representations*, Math. Commun. **3** (1998), 1–17.
[62] M. Tadić, *On reducibility of parabolic induction*, Israel J. Math. **107** (1998), 29–91.
[63] M. Tadić, *On regular square integrable representations of p-adic groups*, Amer. J. Math. **120** (1998), 159–210.
[64] M. Tadić, *Square integrable representations of classical p-adic groups corresponding to segments*, Represent. Theory **3** (1999), 58–89.
[65] M. Tadić, *A family of square integrable representations of classical p-adic groups in the case of general half-integral reducibilities*, Glas. Mat. Ser. III **37** (2002), 21–57.
[66] M. Tadić, *On classification of some classes of irreducible representations of classical groups*, in: Representations of real and p-adic groups, Lect. Notes Ser. Inst. Math. Sci. Natl. Univ. Singap., vol. **2**, Singapore Univ. Press, Singapore, 2004, pp. 95–162.
[67] M. Tadić, *Representation theory of* $\mathrm{GL}(n)$ *over a p-adic division algebra and unitarity in the Jacquet-Langlands correspondence*, Pacific J. Math. **223** (2006), 167–200.
[68] M. Tadić, *On reducibility and unitarizability for classical p-adic groups, some general results*, Canad. J. Math. **61** (2009), 427–450.
[69] M. Tadić, $\mathrm{GL}(n,\mathbb{C})\widehat{\ }$ *and* $\mathrm{GL}(n,\mathbb{R})\widehat{\ }$, in: Automorphic forms and L-functions II. Local aspects, Contemp. Math., vol. **489**, Amer. Math. Soc., Providence, RI, 2009, pp. 285–313.
[70] M. Tadić, *On automorphic duals and isolated representations; new phenomena*, J. Ramanujan Math. Soc. **25** (2010), 295–328.
[71] M. Tadić, *On invariants of discrete series representations of classical p-adic groups*, Manuscripta Math. **135** (2011), 417–435.
[72] M. Tadić, *Reducibility and discrete series in the case of classical p-adic groups; an approach based on examples*, in: Geometry and analysis of automorphic forms of several variables, Ser. Number Theory Appl., vol. **7**, World Sci. Publ., Hackensack, NJ, 2012, pp. 254–333.
[73] M. Tadić, *On interactions between harmonic analysis and the theory of automorphic forms*, in: Automorphic representations and L-functions, Tata Inst. Fundam. Res. Stud. Math., vol. **22**, Tata Inst. Fund. Res., Mumbai, 2013, pp. 591–650.
[74] M. Tadić, *On tempered and square integrable representations of classical p-adic groups*, Sci. China Math. **56** (2013), 2273–2313.
[75] M. Tadić, *Irreducibility criterion for representations induced by essentially unitary ones (case of non-Archimedean* $\mathrm{GL}(n,\mathcal{A})$*)*, Glas. Mat. Ser. III **49** (2014), 123–161.
[76] M. Tadić, *On unitarizability and reducibility*, unpublished notes of the lecture given at the 40th Anniversary Midwest Representation Theory Conference, University of Chicago, Sept. 5-7, 2014.
[77] M. Tadić, *On the reducibility points beyond the ends of complementary series of p-adic general linear groups*, J. Lie Theory **25** (2015), 147–183.
[78] M. Tadić, *Remark on representation theory of general linear groups over a non-archimedean local division algebra*, Rad Hrvat. Akad. Znan. Umjet. Mat. Znan. **523** (2015), 27–53.
[79] M. Tadić, *Some bounds on unitary duals of classical groups – non-archimedean case*, Bull. Iranian Math. Soc. **43** (2017), 405–433.
[80] M. Tadić, *On unitarizability in the case of classical p-adic groups*, in: Geometric aspects of the trace formula, Simons Symp., Springer, Cham, 2018, pp. 405–453.

[81] M. Tadić, *On unitarizability and Arthur packets*, Manuscripta Math. **169** (2022), 327–367.
[82] M. Tadić, Unitarizability in corank three for classical p-adic groups, Mem. Amer. Math. Soc., vol. **1421**, American Mathematical Society, Providence, RI, 2023.
[83] G. van Dijk, *Computation of certain induced characters of* $\mathfrak{p}$*-adic groups*, Math. Ann. **199** (1972), 229–240.
[84] D. A. Vogan, Jr., *The unitary dual of* $\mathrm{GL}(n)$ *over an Archimedean field*, Invent. Math. **83** (1986), 449–505.
[85] B. Xu, *On Mœglin's parametrization of Arthur packets for p-adic quasisplit* $Sp(N)$ *and* $SO(N)$, Canad. J. Math. **69** (2017), 890–960.
[86] B. Xu, *On the cuspidal support of discrete series for p-adic quasisplit* $\mathrm{Sp}(N)$ *and* $\mathrm{SO}(N)$, Manuscripta Math. **154** (2017), 441–502.
[87] A. V. Zelevinsky, *Induced representations of reductive* $\mathfrak{p}$*-adic groups. II. On irreducible representations of* $GL(n)$, Ann. Sci. École Norm. Sup. (4) **13** (1980), 165–210.

Tadićeva filozofija: pregled temeljnih principa i ključnih ideja u radovima Marka Tadića

Neven Grbac i Marcela Hanzer

Sažetak. Ovaj rad daje pregled temeljnih principa i ključnih ideja u radovima Marka Tadića. Njegovo istraživanje se najvećim dijelom bavi teorijom reprezentacija reduktivnih grupa nad lokalnim poljima. Iz perspektive autora, najvažniji temeljni principi u njegovom radu su suštinska jednostavnost harmonijske analize, čak i u nekomutativnom nekompaktnom slučaju, Lefschetzov princip koji kaže da bi se teorija reprezentacija nad arhimedskim i nearhimedskim poljima trebala proučavati na iste načine te princip usporedbe Jacquetovih modula. Osim tih principa, najvažnije i najplodonosnije ideje su strukturni vanjski pristup unitarnom dualu, unitarizabilnost duž pravaca, korištenje topologije raznih duala da se dobiju informacije o harmonijskoj analizi i aritmetici promatrane grupe te veza između unitarizabilnosti i Arthurovih paketa. Svi ti principi i ideje su tema ovog rada.

Neven Grbac
Juraj Dobrila University of Pula
Zagrebačka 30, HR-52100 Pula, Croatia
E-mail: neven.grbac@unipu.hr

Marcela Hanzer
Department of Mathematics, University of Zagreb
Bijenička 30, HR-10000 Zagreb, Croatia
E-mail: marcela.hanzer@math.hr

Received: 6.11.2023.
Accepted: 12.12.2023.

RAD HAZU. MATEMATIČKE ZNANOSTI
Vol. 28 = 558 (2024): 49-56
DOI: https://doi.org/10.21857/9e31lhzl8m

NEW PARTITION IDENTITIES FOR ODD W ODD

Mirko Primc

This note is dedicated to Marko Tadić at the occasion of his 70th birthday.

Abstract. In this note we conjecture Rogers-Ramanujan type colored partition identities for an array $\mathcal{N}_w^{\mathrm{odd}}$ with odd number of rows w such that the first and the last row consist of even positive integers. In a strange way this is different from the partition identities for the array $\mathcal{N}_w$ with odd number of rows w such that the first and the last row consist of odd positive integers—the partition identities conjectured by S. Capparelli, A. Meurman, A. Primc and the author and related to standard representations of the affine Lie algebra of type $C_\ell^{(1)}$ for $w = 2\ell + 1$. The conjecture is based on numerical evidence.

1. Introduction

We write a partition of positive integer n in terms of frequencies f_j—the number of occurrences of the part j in the partition

$$n = \sum_{j\in\mathbb{N}} f_j \cdot j = \underbrace{1+\cdots+1}_{f_1 \text{ times}} + \underbrace{2+\cdots+2}_{f_2 \text{ times}} + \dots . \tag{1.1}$$

It is clear that $f_j = 0$ for all but finitely many $j \in \mathbb{N}$ and that the partition (1.1) is determined by its sequence of frequencies $(f_i \mid i \in \mathbb{N})$.

The partition identities of Rogers (1894), Ramanujan (1913) and Schur (1917) for $k = 1$, and the partition identities of Gordon (1961) for $k \geq 2$, can be stated as:

Let $0 \leq a \leq k$. The number of partitions of n such that

$$f_j + f_{j+1} \leq k \quad \textit{for all } j \textit{ and} \tag{1.2}$$

$$f_1 \leq a \tag{1.3}$$

equals the number of partitions of n into parts $\not\equiv 0, \pm(a+1) \mod (2k+3)$.

The conditions (1.2) on frequencies of two adjacent numbers are called *the difference conditions*, and the condition (1.3) on the frequency of number 1 is

2020 *Mathematics Subject Classification.* 05A19, 17B67.
Key words and phrases. Colored partitions, Rogers-Ramanujan type identities.

called *the initial condition*. There are some other similar partition identities stating that the number of partitions of n satisfying certain difference & initial conditions is equal to the number of partitions of n with parts satisfying certain congruence conditions; these identities are often called the *classical* Rogers-Ramanujan type identities—see [1]. On the other side, some parts of representation theory of affine Kac-Moody Lie algebras lead to Rogers-Ramanujan type *colored* partition identities.

Let $N_1, \dots, N_r$, $r \geq 2$, be non-empty subsets of the set of positive integers $\mathbb{N}$ and let $\mathcal{N}$ be the multiset

$$\mathcal{N} = N_1 \cup \dots \cup N_r. \tag{1.4}$$

If a positive integer a appears in several subsets N_i, then a appears in the multiset $\mathcal{N}$ several times. To see these elements in $\mathcal{N}$ as different, for each positive integer a we may "color" $a \in N_j$ with a "color" j by writting $a_j = (a, j) \in N_j \times \{j\}$, and then write (1.4) in terms of sets as

$$\mathcal{N} = (N_1 \times \{1\}) \cup \dots \cup (N_r \times \{r\}) \subset \mathbb{N} \times \{1, \dots, r\}. \tag{1.5}$$

We say that elements in the multiset $\mathcal{N}$ appear in r colors. In this note a colored partition of positive integer n on the multiset $\mathcal{N}$ is

$$n = \sum_{a \in \mathcal{N}} f_a \cdot a. \tag{1.6}$$

It is clear that $f_a = 0$ for all but finitely many $a \in \mathcal{N}$ and that the partition (1.6) is determined by its "sequence" of frequencies $(f_a \mid a \in \mathcal{N})$.

Example 1.1. Let $\mathcal{N} = N_1 \cup N_2$, where

$$N_1 = \{j \in \mathbb{N} \mid j \equiv 2, 8 \mod 10\}, N_2 = \{j \in \mathbb{N} \mid j \equiv 1, 2, 4, 5, 6, 8, 9 \mod 10\}.$$

Then parts a of colored partitions (1.6) for $\mathcal{N} = N_1 \cup N_2$ appear in two colors, 1 and 2: parts $\equiv 2, 8 \mod 10$ appear in both colors, and parts $\equiv 1, 4, 5, 6, 9 \mod 10$ appear only in color 2. Note that the generating function for colored partitions (1.6) is the infinite periodic product with modulus 10:

$$\prod_{j \equiv 1,2,2,4,5,6,8,8,9 \mod 10} (1 - q^j)^{-1}. \tag{1.7}$$

Lepowsky and Wilson gave in [4] a Lie theoretic interpretation of the classical Rogers-Ramanujan type partition identities in terms of characters of standard modules $L_{A_1^{(1)}}(\Lambda)$ for affine Kac-Moody Lie algebra of the type $A_1^{(1)}$. After their discovery it was expected that for each standard module $L_{\mathfrak{g}(A)}(\Lambda)$ for any affine Lie algebra $\mathfrak{g}(A)$ (cf. [3]) there is a Rogers-Ramanujan type partition identity, where $A_1^{(1)}$ is just "the smallest one" on the list of all affine Lie algebras:

$$A_1^{(1)}, A_\ell^{(1)}, B_\ell^{(1)}, C_\ell^{(1)}, D_\ell^{(1)}, \dots, G_2^{(1)}, A_2^{(2)}, A_{2\ell}^{(2)}, A_{2\ell-1}^{(2)}, D_{\ell+1}^{(2)}, E_6^{(2)}, D_4^{(3)}.$$

However, besides several sporadic results beyond $A_1^{(1)}$, so far this goal is not achieved.

In [2] Rogers-Ramanujan type partition identities are conjectured for all standard $C_\ell^{(1)}$-modules, stating that the number of colored partitions of n with parts satisfying certain congruence conditions is equal to the number of colored partitions (1.6) for a multiset $\mathcal{N} = \mathcal{N}_{2\ell+1}$ composed of ℓ copies of $\mathbb{N}$ and an additional copy of $(2\mathbb{N}+1)$, satisfying difference & initial conditions similar to (1.2)–(1.3) , but much more complicated. Moreover, in [2] another series of similar partition identities is conjectured for a multiset $\mathcal{N} = \mathcal{N}_{2\ell}$ composed of ℓ copies of $\mathbb{N}$, satisfying certain difference & initial conditions, but with no obvious connection to representation theory of affine Lie algebras.

In this note we conjecture yet another Rogers-Ramanujan type colored partition identities for a multiset $\mathcal{N} = \mathcal{N}_{2\ell-1}^{\text{odd}}$, somewhat similar to the conjectured identities for standard $C_\ell^{(1)}$-modules, but again with no obvious connection to representation theory of affine Lie algebras.

2. Arrays with odd width w and even first row

Let $\mathcal{N} = \mathcal{N}_5^{\text{odd}}$ be the colored array of natural numbers with 5 rows

$$\begin{array}{cccccccccc} & 2_1 & & 4_1 & & 6_1 & & 8_1 & & \\ 1_1 & & 3_1 & & 5_1 & & 7_1 & & & \\ & 2_2 & & 4_2 & & 6_2 & & 8_2 & \ldots & . \\ 1_2 & & 3_2 & & 5_2 & & 7_2 & & & \\ & 2_3 & & 4_3 & & 6_3 & & 8_3 & & \end{array} \tag{2.1}$$

$\mathcal{N}$ is a multiset composed of 2 copies of $\mathbb{N}$ and an additional copy of $2\mathbb{N}$, but its elements are arranged in such a way that in the first row are even numbers and that numbers increase by one going to the right on any diagonal.

We consider colored partitions

$$n = \sum_{a \in \mathcal{N}} f_a \cdot a, \tag{2.2}$$

where f_a is the frequency of the part $a \in \mathcal{N}$ in the colored partition (2.2) of n. It is clear that $f_a = 0$ for all but finitely many $a \in \mathcal{N}$ and that the colored partition (2.2) is determined by its array $\mathcal{F}$ of frequencies

$$\mathcal{F} = \begin{array}{cccccccccc} & f_{2_1} & & f_{4_1} & & f_{6_1} & & f_{8_1} & & \\ f_{1_1} & & f_{3_1} & & f_{5_1} & & f_{7_1} & & & \\ & f_{2_2} & & f_{4_2} & & f_{6_2} & & f_{8_2} & \ldots & . \\ f_{1_2} & & f_{3_2} & & f_{5_2} & & f_{7_2} & & & \\ & f_{2_3} & & f_{4_3} & & f_{6_3} & & f_{8_3} & & \end{array} \tag{2.3}$$

We say that two elements in the array $\mathcal{F}$ are *adjacent* if they are simultaneously on two adjacent rows and two adjacent diagonals. For example, f_{5_1} and f_{7_1} in the second row are adjacent to f_{6_1} in the first row and, just as well,

adjacent to f_{6_2} in the third row. We say that the set[1] $\{a_1, a_2, a_3, \dots\}$ is a downward path $\mathcal{Z}$ in the array $\mathcal{F}$ if a_i is in the i-th row and if (a_i, a_{i+1}) is a pair of two adjacent elements for all i. For example, $\mathcal{Z} = \{f_{6_1}, f_{5_1}, f_{6_2}, f_{7_2}, f_{6_3}\}$ is a downward path in $\mathcal{F}$ and there are altogether 2^4 downward paths through f_{6_1} in the first row.

Let k be a positive integer. We say that the frequency array $\mathcal{F}$ *satisfies level k difference conditions* if

$$\sum_{m\in\mathcal{Z}} m \le k \quad \text{for all downward paths } \mathcal{Z} \text{ in } \mathcal{F}. \tag{2.4}$$

Note that the level k difference conditions for a frequency array $\mathcal{F}$ is similar to difference conditions (1.2) for a sequence of frequencies $(f_i \mid i \in \mathbb{N})$, but much more complicated.

Let $k_0, k_1, k_2, k_3 \in \mathbb{N}_0$, $k = k_0 + k_1 + k_2 + k_3 > 0$. We say that an array of frequencies $\mathcal{F}$ *is* $(k_0, k_1, k_2, k_3)^{odd}$*-admissible* if *the extended array of frequencies*

(2.5)

$$\mathcal{F}^{(k_0,k_1,k_2,k_3)\mathrm{odd}} = \begin{array}{cccccccccccc} & k_3 & & f_{2_1} & & f_{4_1} & & f_{6_1} & & f_{8_1} & & \\ k_2 & & f_{1_1} & & f_{3_1} & & f_{5_1} & & f_{7_1} & & & \\ & 0 & & f_{2_2} & & f_{4_2} & & f_{6_2} & & f_{8_2} & & \dots \\ k_1 & & f_{1_2} & & f_{3_2} & & f_{5_2} & & f_{7_2} & & & \\ & k_0 & & f_{2_3} & & f_{4_3} & & f_{6_3} & & f_{8_3} & & \end{array}$$

satisfies the level k difference conditions, that is

$$\sum_{m\in\mathcal{Z}} m \le k \quad \text{for all downward paths } \mathcal{Z} \text{ in } \mathcal{F}^{(k_0,k_1,k_2,k_3)\mathrm{odd}}. \tag{2.6}$$

Note the difference between (2.4) and (2.6): $(k_0, k_1, k_2, k_3)^{\mathrm{odd}}$-admissible frequency array $\mathcal{F}$ satisfies the level k difference conditions (2.4), but in addition to that there are new conditions on the frequencies at the beginning of the array, somewhat similar to initial condition (1.3), but much more complicated. For example, f_{1_1} in the second row must be $\le k_2$ because of (2.6) for the downward path $\mathcal{Z} = \{k_3, f_{1_1}, 0, k_1, k_0\}$.

We say that colored partitions (2.2) with $(k_0, k_1, k_2, k_3)^{\mathrm{odd}}$-admissible arrays of frequencies (2.3) are $(k_0, k_1, k_2, k_3)^{odd}$*-admissible colored partitions.*

Up till now we discussed the colored array of natural numbes $\mathcal{N} = \mathcal{N}_5^{\mathrm{odd}}$ with 5 rows, but all the notions can be extended to arrays $\mathcal{N}_w^{\mathrm{odd}}$ with $w = 2\ell-1$ rows for $\ell = 2, 3, 4, \dots$ with initial "imaginary frequences" being (from the bottom row to the top row):

- $(k_0, k_1, k_2)^{\mathrm{odd}} = [k_0, k_1, k_2]$ for $\ell = 2$, $w = 3$,
- $(k_0, k_1, k_2, k_3)^{\mathrm{odd}} = [k_0, k_1, 0, k_2, k_3]$ for $\ell = 3$, $w = 5$,
- $(k_0, k_1, k_2, k_3, k_4)^{\mathrm{odd}} = [k_0, k_1, 0, k_2, 0, k_3, k_4]$ for $\ell = 4$, $w = 7$,

[1] or the sequence

- ...
- $(k_0, k_1, \ldots, k_{\ell-1}, k_\ell)^{\text{odd}} = [k_0, k_1, 0, k_2, 0, k_3, \ldots, 0, k_{\ell-1}, k_\ell]$ for $\ell \geq 5$.

We say that colored partitions (2.2) on $\mathcal{N} = \mathcal{N}_{2\ell-1}$ with $(k_0, k_1, \ldots, k_\ell)^{\text{odd}}$-admissible arrays of frequencies (2.3) are $(k_0, k_1, \ldots, k_{\ell-1}, k_\ell)^{odd}$-*admissible colored partitions.*

CONJECTURE 2.1. *Let $\ell \geq 2$ and $k_0, k_1, \ldots, k_\ell \in \mathbb{N}_0$, $k = k_0 + \cdots + k_\ell > 0$. Then the generating function for $(k_0, k_1, \ldots, k_\ell)^{odd}$-admissible colored partitions can be expresed as an infinite periodic product with modulus $2\ell+2k$.*

This conjecture is based on numerical evidence: we calculate[2] the number a_n of $(k_0, k_1, \ldots, k_{\ell-1}, k_\ell)^{\text{odd}}$-admissible colored partitions of n and then use Euler's factorization algorithm to write the generating function of partitions $\sum a_n q^n$ as an infinite periodic product—the Python code is available at
`https://github.com/mirkoprimc/odd_w_odd`
.

Bellow are listed some results, where

- "[1, 0, 0] product: [2, 3, 4] mod 6" means that the conjectured generating function for $(1,0,0)^{\text{odd}}$-admissible colored partitions is
$$\prod_{j\equiv 2,3,4 \mod 6} \frac{1}{(1-q^j)}$$
- and "[0, 1, 0] product: [1,2,-3,4,5] mod 6" means that the conjectured generating function for $(0,1,0)^{\text{odd}}$-admissible colored partitions is
$$\frac{\prod_{j\equiv 3 \mod 6}(1-q^j)}{\prod_{j\equiv 1,2,4,5 \mod 6}(1-q^j)}.$$

```
[1, 0, 0] product: [2, 3, 4] mod 6

[0, 1, 0] product: [1, 2, -3, 4, 5] mod 6

[2, 0, 0] product: [2, 3, 4, 4, 5, 6] mod 8

[1, 1, 0] product: [1, 2, 4, 4, 6, 7] mod 8

[1, 0, 1] product: [2, 2, 3, 5, 6, 6] mod 8

[0, 2, 0] product: [1, 2, 2, 6, 6, 7] mod 8

[3, 0, 0] product: [2, 3, 4, 4, 5, 6, 6, 7, 8] mod 10
```

[2]by using a slightly modified code 21AAIC in [2] with built in option to choose even numbers in the top row (for p=0) or to choose odd numbers in the top row (for p=1);

```
[2, 1, 0] product: [1, 2, 4, 4, 5, 6, 6, 8, 9] mod 10
[2, 0, 1] product: [2, 2, 3, 4, 5, 6, 7, 8, 8] mod 10
[1, 2, 0] product: [1, 2, 2, 4, 5, 6, 8, 8, 9] mod 10
[1, 1, 1] product: [1, 2, 3, 4, 4, -5, 6, 6, 7, 8, 9] mod 10
[0, 3, 0] product: [1, 2, 2, 3, 4, -5, 6, 7, 8, 8, 9] mod 10
[4, 0, 0] product: [2, 3, 4, 4, 5, 6, 6, 7, 8, 8, 9, 10] mod 12
[3, 1, 0] product: [1, 2, 4, 4, 5, 6, 6, 7, 8, 8, 10, 11] mod 12
[3, 0, 1] product: [2, 2, 3, 4, 5, 6, 6, 7, 8, 9, 10, 10] mod 12
[2, 2, 0] product: [1, 2, 2, 4, 5, 6, 6, 7, 8, 10, 10, 11] mod 12
[2, 1, 1] product: [1, 2, 3, 4, 4, 6, 6, 8, 8, 9, 10, 11] mod 12
[2, 0, 2] product: [2, 2, 3, 4, 4, 5, 7, 8, 8, 9, 10, 10] mod 12
[1, 3, 0] product: [1, 2, 2, 3, 4, 6, 6, 8, 9, 10, 10, 11] mod 12
[1, 2, 1] product: [1, 2, 2, 4, 4, 5, 7, 8, 8, 10, 10, 11] mod 12
[0, 4, 0] product: [1, 2, 2, 3, 4, 4, 8, 8, 9, 10, 10, 11] mod 12
[1, 0, 0, 0, 0] product: [2, 3, 4, 5, 6] mod 8
[0, 1, 0, 0, 0] product: [1, 2, 4, 6, 7] mod 8
[2, 0, 0, 0, 0] product: [2, 3, 4, 4, 5, 5, 6, 6, 7, 8] mod 10
[1, 1, 0, 0, 0] product: [1, 2, 3, 4, 4, 6, 6, 7, 8, 9] mod 10
[1, 0, 0, 1, 0] product: [1, 2, 2, 4, 5, 5, 6, 8, 8, 9] mod 10
[1, 0, 0, 0, 1] product: [2, 2, 3, 3, 4, 6, 7, 7, 8, 8] mod 10
[0, 2, 0, 0, 0] product: [1, 2, 2, 3, 4, 6, 7, 8, 8, 9] mod 10
```

```
[0, 1, 0, 1, 0] product: [1, 1, 2, 4, 4, 6, 6, 8, 9, 9] mod 10
```

REMARK 2.2. From the list above we see that we may expect Roger-Ramanujan type colored partition identities for most of $(k_0, k_1, \dots, k_\ell)^{\mathrm{odd}}$-admissible parameters—like the conjectured product formula (1.7) for the generating function of $(1, 2, 0)^{\mathrm{odd}}$-admissible colored partitions. It seems that for all the other parameters there is no infinite periodic product; the first possible case are parameters $[0, 0, 1, 0, 0]$ for $\ell = 3$ for which our code gives

```
/oddWodd/allWcasesProd
the first row parity p = 0, the highest_weight = [0, 0, 1, 0, 0]
N = 18
the exponents of the conjectured periodic product:
[2, 3, 3, 4, 4, -6, -6, -7, -7, 8, 9, 9, 9, 9, 10, 10, 10, 10,
10, 10, 10, 11, 11, -12, -12, -12, -12, -12, -12, -12, -13, -13,
-13, -13, -13, -13, -13, -13, -13, -13, -13, -13, -14, -14,
-14, -14, 15, 15, 15, 15, 15, 15, 15, 15, 15, 15, 15, 15, 15,
15, 16, 16, 16, 16, 16, 16, 16, 16, 16, 16, 16, 16, 16, 16, 16,
16, 16, 16, 16, 16, 16, 16, 16, 16, 16, 16, 16, 16, 16, 16, 16,
17, 17, 17, 17, 17, 17, 17, 17, 17, 17, 17, 17, 17, 17, 17, 17,
17, 17, 17, 17, 17, -18, -18, -18, -18, -18, -18, -18, -18,
-18, -18, -18, -18, -18, -18, -18, -18, -18, -18, -18, -18,
-18, -18, -18]
```

The list above encodes Euler's product for the first 19 terms in the generating function of $[0, 0, 1, 0, 0]$-admissible partitions (in the sense of [2]) for $p = 0$:

$$\frac{(1-q^6)^2(1-q^7)^2(1-q^{12})^7(1-q^{13})^{12}(1-q^{13})^{12}(1-q^{14})^4\dots}{(1-q^2)(1-q^3)^2(1-q^4)^2(1-q^8)(1-q^9)^4(1-q^{10})^7(1-q^{11})^2(1-q^{15})^{14}\dots}.$$

ACKNOWLEDGEMENTS.

I thank Marko Tadić for us being friends and the members of our Representation theory seminar in Zagreb for so many years.

I thank Stefano Capparelli, Arne Meurman and Andrej Primc for many of their ideas that are interwoven in this note.

This work is partially supported by the QuantiXLie Centre of Excellence, a project cofinanced by the Croatian Government and European Union through the European Regional Development Fund—the Competitiveness and Cohesion Operational Programme (Grant KK.01.1.1.01.0004).

REFERENCES

[1] G. E. Andrews, The theory of partitions, Encyclopedia of Mathematics and Its Applications, Vol. **2**, Addison-Wesley, 1976.

[2] S. Capparelli, A. Meurman, A. Primc and M. Primc, *New partition identities from* $C_\ell^{(1)}$*-modules*, Glas. Mat. Ser. III **57** (2022), 161–184.

[3] V. G. Kac, Infinite-dimensional Lie algebras, 3rd ed, Cambridge Univ. Press, Cambridge, 1990.
[4] J. Lepowsky and R. L. Wilson, *The structure of standard modules, I: Universal algebras and the Rogers-Ramanujan identities*, Invent. Math. **77** (1984), 199–290; *II: The case* $A_1^{(1)}$*, principal gradation*, Invent. Math. **79** (1985), 417–442.

Novi kombinatorni identiteti za čudan w neparan

M. Primc

Sažetak. U ovom je članku iskazana slutnja o kombinatornim identitetima Rogers-Ramanujanovog tipa za obojene particije na aranžmanu prirodnih brojeva $\mathcal{N}_w^{\mathrm{odd}}$ s neparnim brojem redaka w tako da su prvi i zadnji redak aranžmana parni prirodni brojevi. To se na čudan način razlikuje od kombinatornih identiteta na aranžmanu $\mathcal{N}_w$ s neparnim brojem redaka w tako da su prvi i zadnji redak aranžmana neparni prirodni brojevi – kombinatornih identiteta koje su naslutili S. Capparelli, A. Meurman, A. Primc i autor vezano za standardne reprezentacije afine Liejeve algebre tipa $C_\ell^{(1)}$ za $w = 2\ell + 1$. Slutnja je zasnovana na numeričkoj provjeri.

Department of Mathematics
University of Zagreb
10 000 Zagreb, Croatia
E-mail: primc@math.hr

Received: 5.1.2023.
Revised: 24.1.2023.
Accepted: 14.2.2023.

RAD HAZU. MATEMATIČKE ZNANOSTI
Vol. 28 = 558 (2024): 57-70
DOI: https://doi.org/10.21857/90836c2xgy

ON HIGHER ORDER WEIERSTRASS POINTS ON $X_0(N)$

Damir Mikoč and Goran Muić

For Marko Tadić, with our admiration and appreciation

Abstract. Let Γ be the Fuchsian group of the first kind. For an even integer $m \geq 4$, we describe the space $H^{m/2}(\mathfrak{R}_\Gamma)$ of $m/2$–holomorphic differentials in terms of a subspace $S_m^H(\Gamma)$ of the space of (holomorphic) cuspidal modular forms $S_m(\Gamma)$. This generalizes classical isomorphism $S_2(\Gamma) \simeq H^1(\mathfrak{R}_\Gamma)$. We study the properties of $S_m^H(\Gamma)$. As an application, we describe the algorithm implemented in SAGE for testing if a cusp at ∞ for non–hyperelliptic $X_0(N)$ is a $\frac{m}{2}$–Weierstrass point.

1. Introduction

Let Γ be the Fuchsian group of the first kind [4, Section 1.7, page 28]. Examples of such groups are the important Hecke congruence groups $\Gamma_0(N)$, $N \geq 1$. Let $\mathbb{H}$ be the complex upper half-plane. The quotient $\Gamma\backslash\mathbb{H}$ can be compactified by adding a finite number of Γ-orbits of points in $\mathbb{R}\cup\{\infty\}$ called cusps of Γ. In this way we obtain a compact Riemann surface which will be denoted by $\mathfrak{R}_\Gamma$. We write $g(\Gamma)$ for the genus of $\mathfrak{R}_\Gamma$. For $\Gamma = \Gamma_0(N)$, we let $X_0(N) = \mathfrak{R}_\Gamma$. For $x \in \mathbb{H}$ or $x \in \mathbb{R}\cup\{\infty\}$ a cusp for Γ, let $\mathfrak{a}_x$ be the Γ–orbit of x i.e., the corresponding point in $\mathfrak{R}_\Gamma$. For $l \geq 1$, let $H^l(\mathfrak{R}_\Gamma)$ be the space of all holomorphic differentials on $\mathfrak{R}_\Gamma$ (see [2], or Section 2) in this paper).

Let $m \geq 2$ be an even integer. Let $S_m(\Gamma)$ be the space of (holomorphic) cusp forms of weight m. It is well–known that $S_2(\Gamma)$ is naturally isomorphic to the vector space $H^1(\mathfrak{R}_\Gamma)$ (see [4, Theorem 2.3.2]). This is employed on many instances in studying various properties of modular curves (see for example [15, Chapter 6]). In this paper we study the generalization of this concept to the holomorphic differentials of higher order.

For an even integer $m \geq 4$, the space $S_m(\Gamma)$ is usually too big to be isomorphic to $H^{m/2}(\mathfrak{R}_\Gamma)$ due to presence of cusps and elliptic points. So, in

2020 *Mathematics Subject Classification.* 11F11.
Key words and phrases. Wronskians, holomorphic differentials, cuspidal modular forms.

general, $H^{m/2}(\mathfrak{R}_\Gamma)$ corresponds to a subspace $S_m^H(\Gamma)$ of $S_m(\Gamma)$ (see Lemma 3.1). We study the space $S_m^H(\Gamma)$ in detail in Section 3 (see Lemma 3.2).

We recall in Section 2 (see Definition 2.1) that $\mathfrak{a} \in \mathfrak{R}_\Gamma$ is a $m/2$-Weierstrass point if there exists a non–zero holomorphic differential $\omega \in H^{m/2}(\mathfrak{R}_\Gamma)$ such that $\nu_{\mathfrak{a}}(\omega) \geq \dim H^{m/2}(\mathfrak{R}_\Gamma)$. When $m = 2$ we speak about classical Weierstrass points. So, 1-Weierstrass points are simply Weierstrass points. Weierstrass points on modular curves are very-well studied (see for example [15, Chapter 6], [12], [13], [16], [17], [18], [1]). Higher–order Weierstrass points has not been not studied much (see for example [12], [14]).

The case $m \geq 4$ is more complex. It is studied in Section 4. We recall that $\mathfrak{R}_\Gamma$ is hyperelliptic if $g(\Gamma) \geq 2$, and there is a degree two map onto $\mathbb{P}^1$. Under the assumptions that $\mathfrak{R}_\Gamma$ is not hyperelliptic and that $\mathfrak{a}_\infty$ is a cusp for Γ, we develop a criterion that $\mathfrak{a}_\infty$ is a $\frac{m}{2}$–Weierstrass point for $\mathfrak{R}_\Gamma$ (see Theorem 4.5). The Section 4 is mainly devoted to the proof of Theorem 4.5. For $\Gamma = \Gamma_0(N)$, $X_0(N)$ is not hyperelliptic for most of values of N (see below), and Theorem 4.5 contains an algorithm for testing that $\mathfrak{a}_\infty$ is a $\frac{m}{2}$–Weierstrass point. We illustrate this by several examples (see the end of Section 4).

Let $\Gamma = \Gamma_0(N)$, $N \geq 1$. We recall that $g(\Gamma_0(N)) \geq 2$ unless

$$\begin{cases} N \in \{1-10, 12, 13, 16, 18, 25\} & \text{when } g(\Gamma_0(N)) = 0, \text{ and} \\ N \in \{11, 14, 15, 17, 19-21, 24, 27, 32, 36, 49\} & \text{when } g(\Gamma_0(N)) = 1. \end{cases}$$

Let $g(\Gamma_0(N)) \geq 2$. Then, we remark that Ogg [13] has determined all $X_0(N)$ which are hyperelliptic curves. In view of Ogg's paper, we see that $X_0(N)$ is **not hyperelliptic** for $N \in \{34, 38, 42, 43, 44, 45, 51-58, 60-70\}$ or $N \geq 72$. This implies $g(\Gamma_0(N)) \geq 3$.

In this paper we continue our earlier approach in studying various aspects of modular curves ([3], [7], [8], [9], [10]). This paper contains large parts of previous manuscript [11]. The rest of manuscript [11], related to cups forms constructed out of Wronskians, would be extended and published separately since does not fit here.

We would like to thank I. Kodrnja for her help with the SAGE system. Also, we would like to thank M. Kazalicki and F. Najman for some useful discussions about modular forms and curves in general.

2. Preliminaries I: Holomorphic Differentials and m–Weierstrass Points

The goal of the present section is to recall necessary facts about holomorphic differentials and m–Weierstrass points on a general compact Riemann surface, phrased in terms of $\mathfrak{R}_\Gamma$ where Γ is a Fuchsian group of the first kind. We let $D^m(\mathfrak{R}_\Gamma)$ (resp., $H^m(\mathfrak{R}_\Gamma)$)be the space of meromorphic (resp., holomorphic) differential of degree m on $\mathfrak{R}_\Gamma$ for each $m \in \mathbb{Z}$. We recall that

$D^0(\mathfrak{R}_\Gamma) = \mathbb{C}(\mathfrak{R}_\Gamma)$, and $D^m(\mathfrak{R}_\Gamma) \neq 0$ for all other $m \in \mathbb{Z}$. In fact, if we fix a non–zero $\omega \in D^1(\mathfrak{R}_\Gamma)$, then $D^m(\mathfrak{R}_\Gamma) = \mathbb{C}(\mathfrak{R}_\Gamma)\,\omega^n$. We have the following:

$$\deg(\mathrm{div}(\omega)) = 2m(g(\Gamma)-1), \quad \omega \in D^m(\mathfrak{R}_\Gamma),\ \omega \neq 0. \tag{2.1}$$

We shall be interested in the case $m \geq 1$, and in holomorphic differentials. We recall [2, Proposition III.5.2] that

$$\dim H^m(\mathfrak{R}_\Gamma) = \begin{cases} 0 & \text{if } m \geq 1, g(\Gamma) = 0; \\ g(\Gamma) & \text{if } m = 1,\ g(\Gamma) \geq 1; \\ g(\Gamma) & \text{if } m \geq 2,\ g(\Gamma) = 1; \\ (2m-1)(g(\Gamma)-1) & \text{if } m \geq 2,\ g(\Gamma) \geq 2. \end{cases} \tag{2.2}$$

This follows easily from Riemann-Roch theorem. Recall that the canonical class K is simply the divisor of any non–zero meromorphic form ω on $\mathfrak{R}_\Gamma$. Different choices of a ω differ by a divisor of a non–zero function $f \in \mathbb{C}(\mathfrak{R}_\Gamma)$

$$\mathrm{div}(f\omega) = \mathrm{div}(f) + \mathrm{div}(\omega).$$

Different choices of ω have the same degree since $\deg(\mathrm{div}(f)) = 0$.

For a divisor $\mathfrak{a}$, we let

$$L(\mathfrak{a}) = \{f \in \mathbb{C}(\mathfrak{R}_\Gamma);\quad f = 0 \text{ or } \mathrm{div}(f) + \mathfrak{a} \geq 0\}.$$

We have the following three facts:

(1) for $\mathfrak{a} = 0$, we have $L(\mathfrak{a}) = \mathbb{C}$;
(2) if $\deg(\mathfrak{a}) < 0$, then $L(\mathfrak{a}) = 0$;
(3) the Riemann-Roch theorem: $\dim L(\mathfrak{a}) = \deg(\mathfrak{a}) - g(\Gamma) + 1 + \dim L(K - \mathfrak{a})$.

Now, it is obvious that $f\omega^m \in H^m(\mathfrak{R}_\Gamma)$ if and only if

$$\mathrm{div}(f\omega^m) = \mathrm{div}(f) + m\mathrm{div}(\omega) = \mathrm{div}(f) + mK \geq 0.$$

Equivalently, $f \in L(mK)$. Thus, we have that $\dim H^m(\mathfrak{R}_\Gamma) = \dim L(mK)$. Finally, by the Riemann-Roch theorem, we have the following:

$$\begin{aligned} \dim L(mK) &= \deg(mK) - g(\Gamma) + 1 + \dim L((1-m)K) \\ &= (2m-1)(g(\Gamma)-1) + \dim L((1-m)K). \end{aligned}$$

Now, if $g(\Gamma) \geq 2$, then $\deg(K) = 2(g(\Gamma)-1) > 0$, and the claim easily follows from (1) and (2) above. Next, assume that $g(\Gamma) = 1$. If $\omega \in \dim H^1(\mathfrak{R}_\Gamma)$ s non–zero, then it has a degree zero. Thus, it has no zeroes. This means that $\omega H^{l-1}(\mathfrak{R}_\Gamma) = H^l(\mathfrak{R}_\Gamma)$ for all $l \in \mathbb{Z}$. But since obviously $H^0(\mathfrak{R}_\Gamma)$ consists of constants only, we obtain the claim. Finally, the case $g(\Gamma) = 0$ is obvious from (2) since the degree of mK is $2m(g(\Gamma)-1) < 0$ for all $m \geq 1$.

Assume that $g(\Gamma) \geq 1$ and $m \geq 1$. Then, $\dim H^m(\mathfrak{R}_\Gamma) \neq 0$. Let $t = \dim H^m(\mathfrak{R}_\Gamma)$. We fix the basis $\omega_1, \ldots, \omega_t$ of $H^m(\mathfrak{R}_\Gamma)$. Let z be any local coordinate on $\mathfrak{R}_\Gamma$. Then, locally there exists unique holomorphic functions

$\varphi_1, \ldots, \varphi_t$ such that $\omega_i = \varphi_i (dz)^m$, for all i. Then, again locally, we can consider the Wronskian W_z defined by

$$W_z(\omega_1, \ldots, \omega_t) \stackrel{def}{=} \begin{vmatrix} \varphi_1(z) & \cdots & \varphi_t(z) \\ \frac{d\varphi_1(z)}{dz} & \cdots & \frac{d\varphi_t(z)}{dz} \\ & \cdots & \\ \frac{d^{t-1}\varphi_1(z)}{dz^{k-1}} & \cdots & \frac{d^{t-1}\varphi_t(z)}{dz^{t-1}} \end{vmatrix}. \tag{2.3}$$

As proved in [2, Proposition III.5.10], collection of all

$$W_z(\omega_1, \ldots, \omega_t)(dz)^{\frac{t}{2}(2m-1+t)}, \tag{2.4}$$

defines a non–zero holomorphic differential form

$$W(\omega_1, \ldots, \omega_t) \in H^{\frac{t}{2}(2m-1+t)}(\mathfrak{R}_\Gamma).$$

We call this form the Wronskian of the basis $\omega_1, \ldots, \omega_t$. It is obvious that a different choice of a basis of $H^m(\mathfrak{R}_\Gamma)$ results in a Wronskian which differs from $W(\omega_1, \ldots, \omega_t)$ by a multiplication by a non–zero complex number. Also, the degree is given by

$$\deg(\operatorname{div}(W(\omega_1, \ldots, \omega_t))) = t(2m-1+t)(g(\Gamma)-1). \tag{2.5}$$

Following [2, III.5.9], we make the following definition:

Definition 2.1. *Let $m \geq 1$ be an integer. We say that $\mathfrak{a} \in \mathfrak{R}_\Gamma$ is a m-Weierstrass point if there exists a non–zero $\omega \in H^m(\mathfrak{R}_\Gamma)$ such that*

$$\nu_{\mathfrak{a}}(\omega) \geq \dim H^m(\mathfrak{R}_\Gamma).$$

Equivalently [2, Proposition III.5.10] , if

$$\nu_{\mathfrak{a}}(W(\omega_1, \ldots, \omega_t)) \geq 1.$$

When $m = 1$ we speak about classical Weierstrass points. So, 1-Weierstrass points are simply Weierstrass points.

3. Preliminaries II: Interpretation in Terms of Modular Forms

In this section we give interpretation of results of Section 2 in terms of modular forms. Again, Γ stand for a Fuschsian group of the first kind. Let $m \geq 2$ be an even integer. We consider the space $\mathcal{A}_m(\Gamma)$ be the space of all meromorphic functions $f : \mathbb{H} \to \mathbb{C}$ such that $f(\gamma.z) = j(\gamma, z)^m f(z)$ ($z \in \mathbb{H}$, $\gamma \in \Gamma$) which are meromorphic at every cusp for Γ. By [4, Theorem 2.3.1], there exists isomorphism of vector spaces $\mathcal{A}_m(\Gamma) \longrightarrow D^{m/2}(\mathfrak{R}_\Gamma)$, denoted by $f \longmapsto \omega_f$ such that the following holds (see [4, Theorem 2.3.3]):

$$\begin{aligned}
&\nu_{\mathfrak{a}_\xi}(f) = \nu_{\mathfrak{a}_\xi}(\omega_f) + \frac{m}{2}\left(1 - \frac{1}{e_{\mathfrak{a}_\xi}}\right) \quad \text{if } \xi \in \mathbb{H},\\
&\nu_{\mathfrak{a}}(f) = \nu_{\mathfrak{a}}(\omega_f) + \frac{m}{2} \quad \text{for } \Gamma\text{-cusp } \mathfrak{a},\\
&\operatorname{div}(f) = \operatorname{div}(\omega_f) + \sum_{\mathfrak{a}\in\mathfrak{R}_\Gamma} \frac{m}{2}\left(1 - \frac{1}{e_{\mathfrak{a}}}\right)\mathfrak{a},
\end{aligned} \tag{3.1}$$

where $1/e_{\mathfrak{a}} = 0$ if $\mathfrak{a}$ is a cusp, and $\mathfrak{a}_\xi \in \mathfrak{R}_\Gamma$ is the projection of ξ to $\mathfrak{R}_\Gamma$. Let $f \in M_m(\Gamma)$ be a modular form. Using (3.1), we obtain

$$\operatorname{div}(\omega_f) = \mathfrak{c}'_f - \sum_{\substack{\mathfrak{a}\in\mathfrak{R}_\Gamma,\\ elliptic}} \left[\frac{m}{2}(1 - 1/e_{\mathfrak{a}})\right]\mathfrak{a} - \frac{m}{2}\sum_{\substack{\mathfrak{b}\in\mathfrak{R}_\Gamma,\\ cusp}} \mathfrak{b}, \tag{3.2}$$

where as usual in our previous papers (see for example [9, Lemma 2.2]), $\mathfrak{c}'_f$ is an effective integral divisor which satisfies

$$\operatorname{div}(f) = \mathfrak{c}'_f + \sum_{\substack{\mathfrak{a}\in\mathfrak{R}_\Gamma,\\ elliptic}} \left(\frac{m}{2}(1 - 1/e_{\mathfrak{a}}) - \left[\frac{m}{2}(1 - 1/e_{\mathfrak{a}})\right]\right)\mathfrak{a}. \tag{3.3}$$

This shows that ω_f is holomorphic everywhere except maybe at cusps and elliptic points. Moreover, if $f \in S_m(\Gamma)$ (a space of cuspidal modular forms), then

$$\operatorname{div}(\omega_f) = \mathfrak{c}_f - \sum_{\substack{\mathfrak{a}\in\mathfrak{R}_\Gamma,\\ elliptic}} \left[\frac{m}{2}(1 - 1/e_{\mathfrak{a}})\right]\mathfrak{a} - \left(\frac{m}{2} - 1\right)\sum_{\substack{\mathfrak{b}\in\mathfrak{R}_\Gamma,\\ cusp}} \mathfrak{b}, \tag{3.4}$$

Next, we determine all $f \in M_m(\Gamma)$ such that $\omega_f \in H^{m/2}(\mathfrak{R}_\Gamma)$. From (3.2) we see that such f must belong to $S_m(\Gamma)$, and from (3.4)

$$\mathfrak{c}_f \geq \sum_{\substack{\mathfrak{a}\in\mathfrak{R}_\Gamma,\\ elliptic}} \left[\frac{m}{2}(1 - 1/e_{\mathfrak{a}})\right]\mathfrak{a} + \left(\frac{m}{2} - 1\right)\sum_{\substack{\mathfrak{b}\in\mathfrak{R}_\Gamma,\\ cusp}} \mathfrak{b}, \tag{3.5}$$

where the integral divisor c_f is defined by (see [9, Lemma 2.2])

$$\mathfrak{c}_f \overset{def}{=} \mathfrak{c}'_f - \sum_{\substack{\mathfrak{b}\in\mathfrak{R}_\Gamma,\\ cusp}} \mathfrak{b}.$$

Now, above considerations immediately imply the following result:

LEMMA 3.1. *We define the subspace of $S_m(\Gamma)$ by*

$$S_m^H(\Gamma) = \{f \in S_m(\Gamma);\quad f = 0 \text{ or } f \text{ satisfies (3.5)}\}.$$

Then, the map $f \longmapsto \omega_f$ is an isomorphism of $S_m^H(\Gamma)$ onto $H^{m/2}(\mathfrak{R}_\Gamma)$.

We remark that when $m=2$, (3.5) and reduces to obvious $\mathfrak{c}_f \geq 0$. Hence, $S_2^H(\Gamma) = S_2(\Gamma)$ recovering the standard isomorphism of $S_2(\Gamma)$ and $H^1(\mathfrak{R}_\Gamma)$ (see [4, Theorem 2.3.2]). We continue by collecting a few properties of spaces $S_m^H(\Gamma)$.

LEMMA 3.2. *Assume that $m, n \geq 2$ are even integers. Let Γ be a Fuchsian group of the first kind. Then, we have the following:*

(i) $S_2^H(\Gamma) = S_2(\Gamma)$.
(ii) $S_m^H(\Gamma)$ *is isomorphic to* $H^{m/2}(\mathfrak{R}_\Gamma)$.
(iii) $S_m^H(\Gamma) = \{0\}$ *if* $g(\Gamma) = 0$.
(iv) *Assume that* $g(\Gamma) = 1$. *Let us write* $S_2(\Gamma) = \mathbb{C} \cdot f$, *for some non–zero cuspidal form* f. *Then, we have* $S_m^H(\Gamma) = \mathbb{C} \cdot f^{m/2}$.
(v) $\dim S_m^H(\Gamma) = (m-1)(g(\Gamma)-1)$ *if* $g(\Gamma) \geq 2$ *and* $m \geq 4$.
(vi) $S_m^H(\Gamma) \cdot S_n^H(\Gamma) \subset S_{m+n}^H(\Gamma)$.
(vii) *There are no* $m/2$*–Weierstrass points on* $\mathfrak{R}_\Gamma$ *for* $g(\Gamma) \in \{0, 1\}$.
(viii) *Assume that* $g(\Gamma) \geq 2$, *and* $\mathfrak{a}_\infty$ *is a* Γ*-cusp. Then,* $\mathfrak{a}_\infty$ *is a* $\frac{m}{2}$*–Weierstrass point if and only if there exists* $f \in S_m^H(\Gamma)$, $f \neq 0$, *such that*

$$\mathfrak{c}'_f(\mathfrak{a}_\infty) \geq \begin{cases} \frac{m}{2} + g(\Gamma) & \text{if } m = 2; \\ \frac{m}{2} + (m-1)(g(\Gamma)-1) & \text{if } m \geq 4. \end{cases}$$

(ix) *Assume that* $g(\Gamma) \geq 2$, *and* $\mathfrak{a}_\infty$ *is a* Γ*-cusp. Then, there exists a basis* $f_1, \dots f_t$ *of* $S_m^H(\Gamma)$ *such that their* q*–expansions are of the form*

$$f_u = a_u q^{i_u} + \text{higher order terms in } q, \quad 1 \leq u \leq t,$$

where

$$\frac{m}{2} \leq i_1 < i_2 < \cdots < i_t \leq \frac{m}{2} + m\,(g(\Gamma) - 1)\,,$$

and

$$a_u \in \mathbb{C}, \quad a_u \neq 0.$$

(x) *Assume that* $g(\Gamma) \geq 2$, *and* $\mathfrak{a}_\infty$ *is a* Γ*-cusp. Then,* $\mathfrak{a}_\infty$ *is* **not** *a* $\frac{m}{2}$*–Weierstrass point if and only if there exists a basis* $f_1, \dots f_t$ *of* $S_m^H(\Gamma)$ *such that their* q*–expansions are of the form*

$$f_u = a_u q^{u+m/2-1} + \text{higher order terms in } q, \quad 1 \leq u \leq t,$$

where

$$a_u \in \mathbb{C}, \quad a_u \neq 0.$$

(xi) *Assume that* $g(\Gamma) \geq 1$. *Let us fix a basis* $f_1, \dots, f_t$ *of* $S_m^H(\Gamma)$, *and let* $\omega_1, \dots, \omega_t$ *be the corresponding basis of* $H^{m/2}(\mathfrak{R}_\Gamma)$. *As in Section 2, we construct holomorphic differential* $W(\omega_1, \dots, \omega_t) \in H^{\frac{t}{2}(m-1+t)}(\mathfrak{R}_\Gamma)$. *We also construct the Wronskian* $W(f_1, \dots, f_t) \in S_{t(m+t-1)}(\Gamma)$ *(see Lemma 3.3 below). Then, we have the following equality* $\omega_{W(f_1,\dots,f_t)} = W(\omega_1, \dots, \omega_t)$. *In particular, we obtain the following:* $W(f_1, \dots, f_t) \in$

$S^H_{t(m+t-1)}(\Gamma)$. *Moreover, assume that* $\mathfrak{a}_\infty$ *is a* Γ*-cusp. Then,* $\mathfrak{a}_\infty$ *is a* $\frac{m}{2}$*–Weierstrass point if and only if*

$$\mathfrak{c}_{W(f_1,\dots,f_t)}(\mathfrak{a}_\infty) \geq \frac{t}{2}(m-1+t).$$

Proof. (i) and (ii) follow from above discussion. Next, using above discussion and (2.2) we obtain

$$\dim S^H_m(\Gamma) = \dim H^{m/2}(\mathfrak{R}_\Gamma) = \begin{cases} 0 & \text{if } \ m \geq 2, g(\Gamma) = 0; \\ g(\Gamma) & \text{if } \ m = 2, \ g(\Gamma) \geq 1; \\ g(\Gamma) & \text{if } \ m \geq 4, \ g(\Gamma) = 1; \\ (m-1)(g(\Gamma)-1) & \text{if } \ m \geq 4, \ g(\Gamma) \geq 2. \end{cases}$$

This immediately implies (iii) and (v). Next, assume that $g(\Gamma) = 1$. Then, we see that $\dim S^H_m(\Gamma) \leq 1$ for all even integers $m \geq 4$. It is well known that $f^{m/2} \in S_m(\Gamma)$. Next, (3.5) for $m = 2$, and [9, Lemma 2.2] imply $\mathrm{div}(\omega_f) = \mathfrak{c}_f = 0$. Using [4, Theorem 2.3.2], we obtain $\omega_{f^{m/2}} = \omega_f^{m/2}$. Hence,

$$\mathrm{div}(\omega_{f^{m/2}}) = \frac{m}{2}\mathrm{div}(\omega_f) = 0.$$

Then, applying (3.4) with $f^{m/2}$ in place of f, we obtain

$$\mathfrak{c}_{f^{m/2}} = \sum_{\substack{\mathfrak{a}\in\mathfrak{R}_\Gamma, \\ elliptic}} \Big[\frac{m}{2}(1-1/e_\mathfrak{a})\Big]\,\mathfrak{a} + \Big(\frac{m}{2}-1\Big) \sum_{\substack{\mathfrak{b}\in\mathfrak{R}_\Gamma, \\ cusp}} \mathfrak{b}.$$

This shows that $f^{m/2} \in S^H_m(\Gamma)$ proving (iv). (vi) follows from [4, Theorem 2.3.1]. (vii) follows immediately form the discussion in Section 2, and it is well–known. (viii) is a reinterpretation of Definition 2.1. The details are left to the reader as an easy exercise. Now, we prove (ix) and (x). The case of $g(\Gamma) = 1$ are obvious since we have $S_2(\Gamma) = \mathbb{C} \cdot f$ where

$$\mathfrak{c}'_f = \mathfrak{a}_\infty + \sum_{\substack{\mathfrak{b}\in\mathfrak{R}_\Gamma, \ cusp \\ \mathfrak{b}\neq\mathfrak{a}_\infty}} \mathfrak{b}.$$

Next, we prove (ix) and (x) in the case $g(\Gamma) \geq 2$. Let $f \in S^H_m(\Gamma)$, $f \neq 0$. Then, by the definition of $S^H_m(\Gamma)$, we obtain

$$\mathfrak{c}'_f(\mathfrak{a}_\infty) = 1 + \mathfrak{c}_f(\mathfrak{a}_\infty) \geq 1 + \Big(\frac{m}{2}-1\Big) = \frac{m}{2}. \tag{3.6}$$

On the other hand, again by the definition of $S^H_m(\Gamma)$ (see (3.5)) and the fact that $\mathfrak{c}'_f \geq 0$, we obtain

$$\deg(\mathfrak{c}'_f) = \sum_{\mathfrak{a}\in\mathfrak{R}_\Gamma} \mathfrak{c}'_f(\mathfrak{a}) \geq \sum_{\substack{\mathfrak{a}\in\mathfrak{R}_\Gamma,\\ elliptic}} \mathfrak{c}'_f(\mathfrak{a}) + \sum_{\substack{\mathfrak{b}\in\mathfrak{R}_\Gamma,\ cusp\\ \mathfrak{b}\neq\mathfrak{a}_\infty}} \mathfrak{c}'_f(\mathfrak{b}) + \mathfrak{c}'_f(\mathfrak{a}_\infty) \geq$$
$$\sum_{\substack{\mathfrak{a}\in\mathfrak{R}_\Gamma,\\ elliptic}} \left[\frac{m}{2}(1-1/e_\mathfrak{a})\right] + \frac{m}{2}(t-1) + \mathfrak{c}'_f(\mathfrak{a}_\infty)$$

where t is the number of nonequivalent Γ–cusps. The degree $\deg(\mathfrak{c}'_f)$ is given by

$$\begin{aligned}\deg(\mathfrak{c}'_f) &= \dim M_m(\Gamma) + g(\Gamma) - 1\\ &= \begin{cases} 2(g(\Gamma)-1)+t & \text{if } \ m=2;\\ m(g(\Gamma)-1)+\frac{m}{2}t+\sum_{\substack{\mathfrak{a}\in\mathfrak{R}_\Gamma,\\ elliptic}}\left[\frac{m}{2}(1-1/e_\mathfrak{a})\right] & \text{if } \ m\geq 4.\end{cases}\end{aligned}$$

Combining with the previous inequality, we obtain

$$\mathfrak{c}'_f(\mathfrak{a}_\infty) \leq \frac{m}{2} + m(g(\Gamma)-1) \ \text{ if } \ m\geq 2.$$

Having in mind (3.6), the rest of (ix) has a standard argument (see for example [6, Lemma 4.3]). Finally, (x) follows (viii) and (ix). The last claim (xi) follows easily if we note that $\omega_{W(f_1,\ldots,f_t)} = W(\omega_1,\ldots,\omega_t)$ is equality of two meromorphic differentials. So, it is enough to pick a non–elliptic point $w\in\mathbb{H}$ and check the equality in a small neighborhood of w in $\mathbb{H}$. But this local identity is obvious, and the claim (xi) follows. □

We end this section by recalling a generalization of the usual notion of the Wronskian of modular forms [18], ([15], 6.3.1), ([6], the proof of Theorem 4-5), and ([8], Lemma 4-1).

LEMMA 3.3. *Let $m\geq 1$. Then, for any sequence $f_1,\ldots,f_k\in M_m(\Gamma)$, the Wronskian*

$$W(f_1,\ldots,f_k)(z) \stackrel{def}{=} \begin{vmatrix} f_1(z) & \cdots & f_k(z)\\ \frac{df_1(z)}{dz} & \cdots & \frac{df_k(z)}{dz}\\ & \cdots & \\ \frac{d^{k-1}f_1(z)}{dz^{k-1}} & \cdots & \frac{d^{k-1}f_k(z)}{dz^{k-1}}\end{vmatrix}$$

is a cuspidal modular form in $S_{k(m+k-1)}(\Gamma)$ if $k\geq 2$. If $f_1,\ldots,f_k$ are linearly independent, then $W(f_1,\ldots,f_k)\neq 0$.

4. An Algorithm For $X_0(N)$

In this section we describe the algorithm for testing $\mathfrak{a}_\infty$ to be a $\frac{m}{2}$–Weierstrass point on $X_0(N)$ for all even integers $m = 2, 4, 6, \dots$ assuming that $X_0(N)$ is not hyperelliptic (see Introduction).

We begin with the following remark. The criterion in Lemma 3.2 (x) is a quite good criterion to check whether or not $\mathfrak{a}_\infty$ is a Weierstrass points (the case $m = 2$) using computer systems such as SAGE since we need just to list the basis. This case is well-known (see [15, Definition 6.1]). This criterion has been used in practical computations in combination with SAGE in [9] for $\Gamma = \Gamma_0(N)$.

But, Lemma 3.2 (x) is not good when $m \geq 4$ in most interesting cases. For example, when Γ has elliptic points and for m large enough, there is a basis of the space of cuspidal forms $S_m(\Gamma)$ which contains properly normalized cusp forms having leading terms $q^{m/2}, \dots, q^{m/2+m(g(\Gamma)-1)}$. This follows from the following two lemmas.

First, we recall [8, Lemma 2.9] which is well-known in a slightly different notation ([16], [17]):

Lemma 4.1. *Let $m \geq 4$ be an even integer such that $\dim S_m(\Gamma) \geq g(\Gamma)+1$. Then, for all $1 \leq i \leq t_m - g$, there exists $f_i \in S_m(\Gamma)$ such that $\mathfrak{c}'_{f_i}(\mathfrak{a}_\infty) = i$.*

The second lemma is even more elementary, and it follows from the explicit formula for the dimension of $S_m(\Gamma)$. The details are left to the reader as an exercise.

Lemma 4.2. *Assume that Γ has elliptic points. (For example, $\Gamma = \Gamma_0(N)$.) Then, for a sufficiently large even integer m, we have $\frac{m}{2} + m(g(\Gamma) - 1) \leq \dim S_m(\Gamma) - g(\Gamma)$.*

Thus, under above assumptions, in view of Lemma 3.2 (ix), the listing of basis of $S_m(\Gamma_0(N))$ in SAGE does not give any information about basis of $S_m^H(H)$.

Now, we explain the algorithm for testing that $\mathfrak{a}_\infty$ is a $\frac{m}{2}$–Weierstrass point for $m \geq 4$. In what follows we assume that $g(\Gamma) \geq 2$ (see Lemma 3.2 (vii)). We start with the following lemma.

Lemma 4.3. *Let $m \geq 4$ be an even integer. Let us select a basis $f_0, \dots, f_{g-1}$, $g = g(\Gamma)$, of $S_2(\Gamma)$. Then, all of $\binom{g+\frac{m}{2}-1}{\frac{m}{2}}$ monomials $f_0^{\alpha_0} f_1^{\alpha_1} \cdots f_{g-1}^{\alpha_{g-1}}$, $\alpha_i \in \mathbb{Z}_{\geq 0}$, $\sum_{i=0}^{g-1} \alpha_i = \frac{m}{2}$, belong to $S_m^H(\Gamma)$. We denote by $S_{m,2}^H(\Gamma)$ this subspace of $S_m^H(\Gamma)$.*

Proof. This follows from Lemma 3.2 (vi) since $S_2(\Gamma) = S_2^H(\Gamma)$ (see Lemma 3.2 (i)). ∎

The next lemma is crucial for the algorithm.

LEMMA 4.4. *Let $m \geq 4$ be an even integer. Assume that $\mathfrak{R}_\Gamma$ is not hyperelliptic. Then, we have $S^H_{m,2}(\Gamma) = S^H_m(\Gamma)$.*

PROOF. We use notation of Section 2 freely. The reader should review Lemma 3.2. Let $F \in S_2(\Gamma)$, $F \neq 0$. We define a holomorphic differential form $\omega \in H(\mathfrak{R}_\Gamma)$ by $\omega = \omega_F$. Define a canonical class K by $K = \operatorname{div}(\omega)$. We prove the following:

$$L\left(\frac{m}{2}K\right) = \left\{ \frac{f}{F^{m/2}};\quad f \in S^H_m(\Gamma) \right\}. \tag{4.1}$$

The case $m = 2$ is of course well–known. By the Riemann-Roch theorem and standard results recalled in Section 2 we have

$$\begin{aligned} \dim L\left(\frac{m}{2}K\right) &= \deg\left(\frac{m}{2}K\right) - g(\Gamma) + 1 + \dim L\left(\left(1 - \frac{m}{2}\right)K\right) \\ &= (m-1)(g(\Gamma)-1) + \begin{cases} 1 & \text{if } \ m = 2; \\ 0 & \text{if } \ m \geq 4. \end{cases} \end{aligned}$$

Next, we recall that $S_2(\Gamma) = S^H_2(\Gamma)$ (see Lemma 3.2 (i)). Then, Lemma 3.2 (vi) we obtain $F^{\frac{m}{2}} \in S^H_m(\Gamma)$. Therefore, $f/F^{\frac{m}{2}} \in \mathbb{C}(\mathfrak{R}_\Gamma)$ for all $f \in S^H_m(\Gamma)$.

By the correspondence described in (3.1) we have

$$\begin{aligned} \operatorname{div}(F) = \operatorname{div}(\omega_F) + \sum_{\mathfrak{a}\in\mathfrak{R}_\Gamma}\left(1 - \frac{1}{e_\mathfrak{a}}\right)\mathfrak{a} &= K + \sum_{\mathfrak{a}\in\mathfrak{R}_\Gamma}\left(1 - \frac{1}{e_\mathfrak{a}}\right)\mathfrak{a} \\ &= K + \sum_{\substack{\mathfrak{a}\in\mathfrak{R}_\Gamma, \\ elliptic}} (1 - 1/e_\mathfrak{a})\mathfrak{a} + \sum_{\substack{\mathfrak{b}\in\mathfrak{R}_\Gamma, \\ cusp}} \mathfrak{b}. \end{aligned}$$

Thus, for $f \in S^H_m(\Gamma)$, we have the following:

$$\begin{aligned} \operatorname{div}\left(\frac{f}{F^{\frac{m}{2}}}\right) + \frac{m}{2}K &= \operatorname{div}(f) - \frac{m}{2}\operatorname{div}(F) + \frac{m}{2}K \\ &= \operatorname{div}(f) - \frac{m}{2}\sum_{\substack{\mathfrak{a}\in\mathfrak{R}_\Gamma, \\ elliptic}} (1 - 1/e_\mathfrak{a})\mathfrak{a} - \frac{m}{2}\sum_{\substack{\mathfrak{b}\in\mathfrak{R}_\Gamma, \\ cusp}} \mathfrak{b} \end{aligned}$$

Next, using [9, Lemma 2.2] (see (3.3) in this paper), the right–hand side becomes

$$\mathfrak{c}'_f - \sum_{\substack{\mathfrak{a}\in\mathfrak{R}_\Gamma, \\ elliptic}} \left[\frac{m}{2}(1 - 1/e_\mathfrak{a})\right]\mathfrak{a} - \frac{m}{2}\sum_{\substack{\mathfrak{b}\in\mathfrak{R}_\Gamma, \\ cusp}} \mathfrak{b} \geq 0$$

by the definition of $S^H_m(\Gamma)$. Hence, $f/F^{\frac{m}{2}} \in L\left(\frac{m}{2}K\right)$. Now, comparing the dimensions in (4.1), we obtain their equality. This proves (4.1).

Next, let W be any finite dimensional $\mathbb{C}$–vector space. Let $\mathrm{Symm}^k(W)$ be symmetric tensors of degree $k \geq 1$. Then, by Max Noether theorem ([5], Chapter VII, Corollary 3.27) the multiplication induces a surjective map $\mathrm{Symm}^k(L(K)) \to L\left(\frac{m}{2}K\right)$. The lemma follows. □

Now, after all of these preparations, we come to the main result of the paper. It gives a good criterion for **testing** that $\mathfrak{a}_\infty$ is a $\frac{m}{2}$–Weierstrass point for $m \geq 4$. We give examples of explicit computations below.

THEOREM 4.5. *Let $m \geq 4$ be an even integer. Assume that $\mathfrak{R}_\Gamma$ is not hyperelliptic. Assume that $\mathfrak{a}_\infty$ is a cusp for Γ. Let us select a basis $f_0, \ldots, f_{g-1}$, $g = g(\Gamma)$, of $S_2(\Gamma)$ (listed by their q–expansions using SAGE system if $\Gamma = \Gamma_0(N)$). Compute q–expansions of all monomials*

$$f_0^{\alpha_0} f_1^{\alpha_1} \cdots f_{g-1}^{\alpha_{g-1}}, \quad \alpha_i \in \mathbb{Z}_{\geq 0}, \ \sum_{i=0}^{g-1} \alpha_i = \frac{m}{2}.$$

Then, $\mathfrak{a}_\infty$ is **not** *a $\frac{m}{2}$–Weierstrass point if and only if there exist $\mathbb{C}$–linear combinations of such monomials, say $F_1, \ldots F_t$, $t = (m-1)(g-1)$, such that their q–expansions are of the form*

$$F_u = a_u q^{u+m/2-1} + \text{higher order terms in } q, \quad 1 \leq u \leq t,$$

where

$$a_u \in \mathbb{C}, \quad a_u \neq 0.$$

PROOF. We combine Lemmas 4.4 and 3.2 (x). □

We make the method of Theorem 4.5 more explicit as follows for $\Gamma = \Gamma_0(N)$. First, the number of monomials is

$$\binom{g + m/2 - 1}{m/2}.$$

Then, by selecting the first $m/2 + m \cdot (g-1)$ terms from q–expansions of the monomials, we can create the matrix of size

$$\binom{g + m/2 - 1}{m/2} \times \left(\frac{m}{2} + m \cdot (g-1)\right).$$

Then, we perform suitable integral Gaussian elimination method to transform the matrix into row echelon form. The procedure is as follows. We successively sort and transform the row matrices to cancel the leading row coefficients with the same number of leading zeros as their predecessor. We use the *Quicksort algorithm* for sorting. We obtain the transformed matrix and the transformation matrix. The non-null rows of the transformed matrix give the q-expansions of the basis elements of $S_m^H(\Gamma)$, and the corresponding rows

of the transformation matrix give the corresponding linear combinations of monomials. Using this method, we check the following from Theorem 4.5.

Let $m = 4$. Then, for $X_0(34)$ the basis of $S_4^H(\Gamma_0(34))$ is given by

$$\begin{aligned}
f_0^2 &= q^2 - 4q^5 - 4q^6 + 12q^8 + 12q^9 - 2q^{10} \\
f_0f_1 &= q^3 - q^5 - 2q^6 - 2q^7 + 2q^8 + 5q^9 + 2q^{10} \\
f_0f_2 &= q^4 - 2q^5 - q^6 - q^7 + 6q^8 + 6q^9 + 2q^{10} \\
-f_1^2 + f_0f_2 &= -2q^5 + q^6 - q^7 + 5q^8 + 6q^9 + 4q^{10} \\
-f_1^2 + f_0f_2 + 2f_1f_2 &= -3q^6 - 5q^7 + 11q^8 + 16q^9 + 2q^{10} \\
-f_1^2 + f_0f_2 + 2f_1f_2 + 3f_2^2 &= -17q^7 + 17q^8 + 34q^9 + 17q^{10}
\end{aligned}$$

Their first exponents are $\frac{m}{2} = 2, 3, 4, 5, 6, \frac{m}{2} + (m-1)(g-1) - 1 = 7$ which shows that $\mathfrak{a}_\infty$ is not 2–Weierstrass point for $X_0(34)$.

For $X_0(55)$, the basis of $S_4^H(\Gamma_0(55))$ is given by

$$\begin{aligned}
f_0^2 &= q^2 - 2q^8 + \cdots \\
f_0f_1 &= q^3 - 2q^7 + \cdots \\
f_0f_2 &= q^4 - 2q^7 + \cdots \\
f_0f_3 &= q^5 - 2q^7 + \cdots \\
f_0f_4 &= q^6 - 2q^{11} + \cdots \\
-f_1f_2 + f_0f_3 &= -2q^7 + q^8 + \cdots \\
-f_1f_2 + f_0f_3 + 2f_2f_3 &= q^8 + 2q^9 + \cdots \\
-f_1f_2 + f_0f_3 + 2f_2f_3 - f_3^2 &= 2q^9 - q^{10} + \cdots \\
-f_1f_2 + f_0f_3 + 2f_2f_3 - f_3^2 - 2f_3f_4 &= -q^{10} + 11q^{12} + \cdots \\
-f_1f_2 + f_0f_3 + 2f_2f_3 - f_3^2 - 2f_3f_4 + f_4^2 &= 11q^{12} - 11q^{13} + \cdots \\
-f_1f_2 - f_2^2 + f_0f_3 + 2f_2f_3 - f_3^2 + f_0f_4 - 6f_3f_4 - f_4^2 &= -22q^{13} + 44q^{15} + \cdots \\
-f_2^2 + f_3^2 + f_0f_4 - f_2f_4 - 4f_3f_4 + 2f_4^2 &= -22q^{14} + 22q^{15} + \cdots
\end{aligned}$$

The last exponent is $14 > \frac{m}{2} + (m-1)(g-1) - 1 = 13$. So, $\mathfrak{a}_\infty$ is a 2–Weierstrass point for $X_0(55)$.

We end the section with the following remark. When $\mathfrak{R}_\Gamma$ is hyperelliptic, $S_{m,2}^H(\Gamma)$ could be a proper subspace of $S_m^H(\Gamma)$. For example, assume that $g(\Gamma) = 2$. Let f_0, f_1 be a basis of $S_2(\Gamma)$. Then, for any even integer $m \geq 4$,

$f_0^u f_1^{\frac{m}{2}-u}$, $0 \le u \le m$ is a basis of $S^H_{m,2}(\Gamma)$. Therefore,

$$\dim S^H_m(\Gamma) = (m-1)(g(\Gamma)-1) = m-1 \ge \frac{m}{2}+1 = \dim S^H_{m,2}(\Gamma), \quad \text{for } m \ge 4.$$

Thus, $S^H_{4,2}(\Gamma) = S^H_4(\Gamma)$ while $S^H_{m,2}(\Gamma)$ is a proper subset of $S^H_m(\Gamma)$ for $m \ge 6$.

Acknowledgements.

The author acknowledges Croatian Science Foundation grant IP-2018-01-3628.

References

[1] R. Dicks, *A higher weight analogue of Ogg's theorem on Weierstrass points*, Int. J. Number Theory **17** (2021), 1155–1162.
[2] H. M. Farkas and I. Kra, Riemann surfaces, Second edition, Grad. Texts in Math. **71**, Springer-Verlag, New York, 1992.
[3] I. Kodrnja, *On a simple model of $X_0(N)$*, Monatsh. Math. **186** (2018), 653–661.
[4] T. Miyake, Modular forms, Springer-Verlag, Berlin, 2006.
[5] R. Miranda, Algebraic Curves and Riemann Surfaces, Grad. Stud. Math **5**, American Mathematical Society, Providence, RI, 1995.
[6] G. Muić, *Modular curves and bases for the spaces of cuspidal modular forms*, Ramanujan J. **27** (2012), 181–208.
[7] G. Muić, *On embeddings of curves in projective spaces*, Monatsh. Math. **173** (2014), 239–256.
[8] G. Muić, *On degrees and birationality of the maps $X_0(N) \to \mathbb{P}^2$ constructed via modular forms*, Monatsh. Math. **180** (2016), 607–629.
[9] G. Muić and I. Kodrnja, *On primitive elements of algebraic function fields and models of $X_0(N)$*, Ramanujan J. **55** (2021), 393–420.
[10] G. Muić and D. Mikoč, *Birational maps of $X(1)$ into $\mathbb{P}^2$*, Glas. Mat. Ser. III **48** (2013), 301–312).
[11] G. Muić and D. Mikoč, *On m–fold holomorphic differentials and modular forms,* manuscript (`https://arxiv.org/abs/2101.00601`).
[12] A. Neeman, *The distribution of Weierstrass points on a compact Riemann surface*, Ann. of Math. (2) **120** (1984), 317–328.
[13] A. P. Ogg, *Hyperelliptic modular curves*, Bull. Soc. Math. France **102** (1974), 449–462.
[14] B. A. Olsen, *On higher order Weierstrass points*, Ann. of Math. (2) **95** (1972), 357–364.
[15] K. Ono, The Web of Modularity: Arithmetic of the Coefficients of Modular Forms and q–Series, Conference Board of the Mathematical Sciences **102**, American Mathematical Society, Providence, RI, 2004.
[16] H. Petersson, *Einheitliche Begründung der Vollständigkeitssätze für die Poincaréschen Reihen von reeller Dimension bei beliebigen Grenzkreisgruppen von erster Art*, Abh. Math. Sem. Hansischen Univ. **14** (1941), 22–60.
[17] H. Petersson, *Über Weierstrasspunkte und die expliziten Darstellungen der automorphen Formen von reeller Dimension*, Math. Z. **52** (1949), 32–59.
[18] D. Rohrlich, *Weierstrass points and modular forms*, Illinois J. Math **29** (1985), 134–141.
[19] Sage Mathematics Software (Version 8.8), The Sage Developers, 2019, `https://www.sagemath.org`.

O Weierstrassovim točkama višeg reda na $X_0(N)$

Damir Mikoč i Goran Muić

SAŽETAK. Neka je Γ Fuchsova grupa prve vrste. Za paran cijeli broj $m \geq 4$ opisujemo prostor $H^{m/2}(\mathfrak{R}_\Gamma)$ svih $m/2$–holomorfnih diferencijala u terminima potprostora $S_m^H(\Gamma)$ prostora (holomorfnih) kuspidalnih modularnih formi $S_m(\Gamma)$. To generalizira klasični izomorfizam $S_2(\Gamma) \simeq H^1(\mathfrak{R}_\Gamma)$. Proučavamo svojstva prostora $S_m^H(\Gamma)$. Kao primjenu, dajemo algoritam implementiran u SAGE-u koji testira je li kusp u ∞ za nehipereliptički $X_0(N)$ $\frac{m}{2}$–Weierstrassova točka.

D. Mikoč
Department of Teacher Education Studies in Gospić
University of Zadar
dr. Ante Starčevića 12, 53000 Gospić, Croatia
E-mail: dmikoc@unizd.hr

G. Muić
Department of Mathematics, Faculty of Science
University of Zagreb
Bijenička 30, 10000 Zagreb, Croatia
E-mail: gmuic@math.hr

Received: 7.1.2023.
Accepted: 14.3.2023.

RAD HAZU. MATEMATIČKE ZNANOSTI
Vol. 28 = 558 (2024): 71-91
DOI: https://doi.org/10.21857/m8vqrt3n19

ENDOSCOPIC TRANSFER AND AUTOMORPHIC L-FUNCTIONS: THE CASE OF THE GENERAL SPIN GROUP AND THE TWISTED SYMMETRIC AND EXTERIOR SQUARE L-FUNCTIONS

Neven Grbac

Dedicated to Marko Tadić on the occasion of his 70th birthday

Abstract. The endoscopic classification and the Langlands spectral theory are two approaches to the discrete spectrum of the group of adèlic points of a reductive linear algebraic group defined over a number field. The two points of view on the same object yield interesting consequences. In this paper, the case of the general spin group is considered. In that case, it is shown how the comparison of the two approaches implies that the twisted symmetric and exterior square complete automorphic L-functions associated to a cuspidal automorphic representation of the general linear group are holomorphic in the critical strip.

1. Introduction

It happens quite often in mathematics that different points of view on the same object yield the most fruitful ideas and new insights. Examples of this phenomenon pop out in each and every part of mathematics. It is very common that this kind of ideas are considered to be mathematical jewels – the most beautiful parts of a mathematical theory. We begin this paper with an incomplete and very personal choice of evidence for this claim.

The representations of groups on vector spaces make a perfect basic example. The group is a non-linear object, often difficult to grasp. Its representation on a vector space realizes the elements of the group as linear operators, while at the same time resembling the group structure and its symmetries. However, the full power of this approach lies in the study and comparison of as many as possible different representations of the given group. Different

2020 *Mathematics Subject Classification.* 11F66, 11F70, 11F72, 22E55.
Key words and phrases. Twisted symmetric and exterior square automorphic L-function, general spin group, automorphic representation, endoscopic classification, spectral decomposition, Langlands–Shahidi method.

representations may be viewed as different points of view on the same group, thus providing the first evidence for our opening claim.

This paper is dedicated to Marko Tadić. In his work, the above phenomenon can be seen, for instance, in his applications of Jacquet modules in the study of parabolically induced representations of p-adic groups, see [36], [42], [43], [44], [45], [46], among other papers. The idea is to apply as many Jacquet modules as possible to a given parabolically induced representation, in order to get results about its structure and reducibility through a comparison of different Jacquet modules. In a sense, different Jacquet modules provide different points of view on the same induced representation. This idea of Tadić bears the name *Tadić philosophy*, coined by Corinne Blondel in [8].

Another prominent example, within the scope of our own research interests, is the study of cohomology of arithmetic groups. Let Γ be an arithmetic subgroup of a connected semisimple linear algebraic group G defined over the field $\mathbb{Q}$ of rational numbers. Then Γ can be viewed as a discrete subgroup of the group $G(\mathbb{R})$ of real points of G. Assume that Γ is a torsion free congruence subgroup. The cohomology of Γ can be expressed in two substantially different ways.

The first point of view on cohomology of Γ is geometric. Viewing Γ as a discrete subgroup of the real Lie group $G(\mathbb{R})$, its cohomology can be expressed in terms of differential forms as the de Rham cohomology of the locally symmetric space $\Gamma\backslash G(\mathbb{R})/K_{\mathbb{R}}$, where $K_{\mathbb{R}}$ is a maximal compact subgroup of $G(\mathbb{R})$. We refer to [11] for more details. The other point of view on the cohomology of Γ is from the arithmetic perspective of the theory of automorphic forms. According to the regularization theorems of Borel [9] and the result of Franke [12], it can be expressed as the relative Lie algebra cohomology of the space of automorphic forms on $G(\mathbb{R})$ with respect to Γ.

The two complementary points of view on the cohomology of arithmetic groups allow the flow of ideas in both directions. For example, geometric constructions of non-trivial cohomology classes imply the existence of automorphic forms with certain properties. On the other hand, the understanding of the structure of spaces of automorphic forms provides an approach to explicit calculation of cohomology. The problem is that the structure of spaces of automorphic forms depends on deep arithmetic conditions given in terms of analytic properties of Eisenstein series and automorphic L-functions. However, the combination of the geometric and arithmetic point of view often yields best results. The geometric necessary non-vanishing conditions in cohomology reduce the problem to the understanding of the structure of spaces of automorphic forms with quite regular cuspidal support, which turns out to be feasible in many cases. This line of research is followed in the collaboration of the author with Joachim Schwermer [17], [18], [19], [20], [21], and with Harald Grobner [16]. See [15] for a survey of this work.

We are now slowly moving towards the scope of the present paper. The Arthur trace formula [1], [3] is another superb example of the phenomenon mentioned in the opening paragraph. It is the formula that combines the geometric and spectral expressions of the same object – the trace of the right regular representation on the relevant space of automorphic forms on a reductive group. The applications of the trace formula compare not only the two sides of the formula, but also the trace formulas for different groups and certain other objects related to them. All these points of view on the trace, result in the theory of endoscopy, which provides constructions of functorial transfers of automorphic representations between different groups, as predicted by the Langlands program. The endoscopic classification of automorphic representations of classical groups is obtained in that way [4], [35], [51], subject to certain technical issues related to the trace formula. The endoscopic transfer mentioned in the title is the functorial transfer of automorphic representations of the general spin group to the automorphic representations of the general linear group, formulated without proof in terms of Arthur parameters in [2].

The last evidence for the opening claim of this paper, at least in our incomplete list, arises from the comparison of the endoscopic classification and the Langlands theory of spectral decomposition of spaces of automorphic forms on reductive groups [31], [34]. Given a reductive linear algebraic group G defined over a number field, let $L^2_{\mathrm{disc}}(G,\chi)$ denote the discrete part of the L^2 space of square-integrable automorphic forms on the group $G(\mathbb{A})$ of adèlic points of G with central character χ. For precise definition of these notions see [10]. There are two different points of view on the space $L^2_{\mathrm{disc}}(G,\chi)$.

The first point of view is the endoscopic classification, relying on the Arthur trace formula, which yields the description of $L^2_{\mathrm{disc}}(G,\chi)$ in terms of Arthur parameters, which can be reformulated in terms of the discrete spectrum of the general linear groups. The second point of view is the Langlands spectral theory, which describes the constituents of $L^2_{\mathrm{disc}}(G,\chi)$ in terms of the analytic properties of Eisenstein series and the automorphic L-functions appearing in their constant terms via the Langlands–Shahidi method [34], [40]. The comparison of the two descriptions of $L^2_{\mathrm{disc}}(G,\chi)$ can be used to prove certain analytic properties of the automorphic L-functions in the constant term of the Eisenstein series. This idea was successfully applied in the case of the symplectic and special orthogonal groups to show how endoscopic classification implies the holomorphy in the critical strip of the symmetric and exterior square automorphic L-functions associated to a cuspidal automorphic representation of the general linear group [13], and in the case of the quasi-split unitary groups implies the holomorphy of the Asai automorphic L-functions [22]. See [14] for an overview of these results.

The present paper considers the case of the general spin groups and the twisted symmetric and exterior square automorphic L-functions associated to a cuspidal automorphic representation of the general linear group, which

appear in the constant term of the Eisenstein series on the general spin groups. The Langlands spectral theory is applied in this case by Mahdi Asgari [5], and the endoscopic classification is formulated without proof by James Arthur in [2]. The main result is that the endoscopic classification of the automorphic representations in $L^2_{\mathrm{disc}}(G,\chi)$ in the case of the general spin group G would imply that the twisted symmetric and exterior square complete automorphic L-functions are holomorphic at the values of their complex parameter in the critical strip.

There are other approaches to the study of these automorphic L-functions. In particular, the theory of integral representations also implies the analytic properties of twisted symmetric and exterior square partial automorphic L-functions [47], [48], [27], [7], but not the complete ones, because it avoids the finite number of bad local places. However, the Langlands–Shahidi method and the theory of integral representations for automorphic L-functions provide yet another example of two points of view on the same object, thus providing more evidence for the opening claim of this paper.

The motivation and inspiration for writing this paper arose almost ten years ago, at the Marko Tadić 60th birthday conference,[1] from a question by Guy Henniart, and the subsequent discussion with Colette Mœglin. After my talk on the analytic properties of the symmetric and exterior square automorphic L-functions, Henniart asked whether these results could be generalized to the twisted L-functions. The case of the general spin groups treated here provides the affirmative answer.

It is really great how this special volume, dedicated to the occasion of Marko Tadić's 70th birthday, popped out these ideas from the back of my mind and made me write these lines... I would like to express my gratitude to Guy Henniart for raising the question and Colette Mœglin for the useful discussion. I am thankful to Ivan Matić for answering my questions regarding the structure of general spin groups. I am indebted to Goran Muić for the invitation to contribute to the special volume. Thanks are also due to the referee for careful reading of the manuscript and pointing out the missing details which substantially improved the exposition.

Finally, it is my great pleasure to acknowledge my gratitude to Marko Tadić for leading the representation theory research group in Zagreb, including researchers from other Croatian universities such as myself, for so many years, handling the administration of a series of research projects during which we all grew up into what could be now referred to as the Zagreb or Croatian school of representation theory and automorphic forms. I look forward to future collaboration, cooperation and companionship in many years to come. Happy birthday, Marko!

[1] Conference *Representations of p-adic Groups; A Conference Dedicated to Marko Tadić on his 60th Birthday*, held at the Department of Mathematics, University of Zagreb, Croatia, in June 2014.

2. Preliminaries

Let F be an algebraic number field. For a place v of F, let F_v denote the completion of F at v. Let $\mathbb{A}$ denote the ring of adèles, and $\mathbb{I}$ the group of idèles of F.

Let n be a positive integer, and $r = \lfloor \frac{n}{2} \rfloor$ the largest integer not greater than $\frac{n}{2}$. We assume throughout the paper that $r \geq 2$, in order to avoid trivial cases. Let $G_n = GSpin_n$ be the F-split general spin group of F-rank r defined over F. It is a split reductive linear algebraic group over F with the root system of type B_r if $n = 2r+1$ is odd, and of type D_r if $n = 2r$ is even. The derived group of G_n is the spin group $Spin_n$, which is a double covering of the split special orthogonal group SO_n, viewed as algebraic groups. In this paper, we do not require a complete description of the structure of G_n, and refer to [5] or [23] for a detailed account. See also [32] for the closely related case of the split spin groups.

Let P be a parabolic F-subgroup of G_n with the Levi decomposition $P = MN$, where the Levi factor M is isomorphic to

$$M \cong GL_r \times GL_1,$$

and N denotes the unipotent radical. Following [23], we refer to such parabolic subgroup as the Siegel parabolic subgroup. In the case of $n = 2r+1$ odd, the Siegel parabolic subgroup is unique up to conjugacy, and thus, self-associate.

However, in the case of $n = 2r$ even, there are two non-conjugate such parabolic subgroups with isomorphic, but not conjugate, Levi factors [6, page 143], [29]. Since the Levi factors are not conjugate, both parabolic subgroups are self-associate. These two parabolic subgroups are obtained by removing either the last or the second-to-last simple root from the set of simple roots of G_{2r}, which form the root system of type D_r. In what follows, we choose the Siegel parabolic subgroup P of G_{2r} to be the parabolic subgroup that is obtained by removing the last simple root from the set of simple roots.

Let W, resp. W_M, be the Weyl group of G_n, resp. M. Let w_0 be the unique non-trivial Weyl group element of G_n of minimal length in its coset $w_0 W_M$ such that $w_0 M w_0^{-1}$ is the Levi factor of a standard parabolic subgroup. Note that implicit in these considerations is the choice of a minimal parabolic F-subgroup of G_n and its maximal F-split torus.

Let $\widehat{G}_n$ denote the complex dual group of G_n. It is the similitude symplectic group $\widehat{G}_n = GSp_{2r}(\mathbb{C})$ of rank r if $n = 2r+1$ is odd, and the similitude special orthogonal group $\widehat{G}_n = GSO_{2r}(\mathbb{C})$ of rank r if $n = 2r$ is even. The complex dual group of the Levi factor M of the Siegel parabolic subgroup is $\widehat{M} = GL_r(\mathbb{C}) \times GL_1(\mathbb{C})$. In the case of the Siegel parabolic subgroup, the action R of the complex dual group $\widehat{M}$ on the Lie algebra of the complex dual group of the unipotent radical N is irreducible [5], [23], [30].

Let $\pi \otimes \chi$ be a cuspidal automorphic representation of the Levi factor $M(\mathbb{A}) \cong GL_r(\mathbb{A}) \times GL_1(\mathbb{A})$. It is the exterior tensor product of a cuspidal automorphic representation π of $GL_r(\mathbb{A})$ and the unitary Hecke character χ of the group of idèles $\mathbb{I} = GL_1(\mathbb{A})$. In this case, since every cuspidal automorphic representation of $GL_r(\mathbb{A})$ is globally generic (with respect to any fixed non-trivial additive character), the automorphic L-functions associated to $\pi \otimes \chi$ and the irreducible representation R of the complex dual group $\widehat{M}$ can be defined by the Langlands–Shahidi method [40], [39]. If $n = 2r + 1$ is odd, the L-function associated to $\pi \otimes \chi$ and R is the twisted symmetric square automorphic L-function

$$L(s, \pi, Sym^2 \otimes \chi),$$

and if $n = 2r$ is even, the L-function associated to $\pi \otimes \chi$ and R is the twisted exterior square automorphic L-function

$$L(s, \pi, \wedge^2 \otimes \chi).$$

These two L-functions are the main objects of concern in this paper.

3. Langlands spectral theory

In this section we construct certain non-trivial constituents of the discrete spectrum $L^2_{\text{disc}}(G_n, \chi)$ of the general spin group $G_n(\mathbb{A})$, where χ is the central character, subject to the analytic properties of the twisted symmetric and exterior square automorphic L-function associated to a cuspidal automorphic representation of the Levi factor $M(\mathbb{A})$ of the Siegel parabolic subgroup P in G_n.

Let $\pi \otimes \chi$ be a cuspidal automorphic representation of the Levi factor $M(\mathbb{A}) \cong GL_r(\mathbb{A}) \times GL_1(\mathbb{A})$, where π is a cuspidal automorphic representation of $GL_r(\mathbb{A})$, and χ a unitary Hecke character of $\mathbb{I} \cong GL_1(\mathbb{A})$. We always assume that cuspidal automorphic representations of the general linear group are irreducible and unitary. We also make the following convention.

Convention. *In what follows, it is always assumed that π and χ are normalized in such a way that the possible poles of the Eisenstein series on $G_n(\mathbb{A})$ associated to $\pi \otimes \chi$, and the automorphic L-functions in their constant terms, are all real. This assumption is not restrictive, as it is just a convenient choice of coordinates. It is achieved by an appropriate twist by a unitary character. See [28, p. 121, Sect. 4.1] for more details.*

Given $s \in \mathbb{C}$, we may form the parabolically induced representation

$$I(s, \pi \otimes \chi) = \text{Ind}_{P(\mathbb{A})}^{G_n(\mathbb{A})} \left(\pi |\det|^s \otimes \chi\right),$$

where, as usual, the parabolic induction is normalized by the half-sum of positive roots in the unipotent radical N.

The Eisenstein series on $G_n(\mathbb{A})$ associated to $\pi \otimes \chi$ are constructed using sections f_s of the induced representations $I(s, \pi \otimes \chi)$. They are defined as the analytic continuation from the domain of convergence of the sum

$$E(f_s, g) = \sum_{\gamma \in P(F) \backslash G_n(F)} f_s(\gamma g),$$

where $g \in G_n(\mathbb{A})$. The sum converges absolutely for s in some right half-plane, and its analytic continuation is a meromorphic function on the whole complex plane. See [34], [31] for more details.

In the case of the general spin group, the Langlands–Shahidi method [40], [38] implies that the constant term $E_P(f_s, g)$ along P of the Eisenstein series $E(f_s, g)$ can be expressed in terms of the twisted symmetric and exterior square automorphic L-functions as

$$E_P(f_s, g) = f_s(g) + \frac{L(2s, \pi, R)}{\varepsilon(2s, \pi, R) L(1 + 2s, \pi, R)} N(s, \pi \otimes \chi, w_0) f_s(g),$$

where $R = Sym^2 \otimes \chi$, resp. $R = \wedge^2 \otimes \chi$, if $n = 2r + 1$ is odd, resp. $n = 2r$ is even. The operator $N(s, \pi \otimes \chi, w_0)$ is the normalized intertwining operator associated to π and the Weyl group element w_0, as in [6].

Our first task is to determine the poles of the Eisenstein series $E(f_s, g)$ for the values s of its complex parameter such that $Re(s) \geq 0$. Our Convention made in Section 3 regarding the normalization of π implies that these poles are real. By the general theory of Eisenstein series [34], the possible poles of the Eisenstein series coincide with the poles of its constant term. Hence, we should study the poles of the second summand in the expression for the constant term. The first step is the following lemma which shows that the pole is determined by the L-functions, and not by the normalized intertwining operator.

LEMMA 3.1. *In the notation as above, the normalized intertwining operator $N(s, \pi \otimes \chi, w_0)$ is holomorphic and not identically vanishing at the values s of its complex parameter such that $Re(s) \geq 0$.*

PROOF. This lemma is essentially Proposition 3.6 in [6] with a slight improvement due to the fact that we deal with the Siegel parabolic subgroup. Our statement for the global normalized intertwining operator $N(s, \pi \otimes \chi, w_0)$ is reduced to the local result for the local normalized intertwining operators $N(s, \pi_v \otimes \chi_v, w_0)$, where $\pi \cong \otimes_v \pi_v$ is the restricted tensor product decomposition and $\chi = \prod_v \chi_v$, as follows.

Let $f_s = \otimes_v f_{s,v}$ be a decomposable section, where $f_{s,v}$ are sections of the local induced representations

$$I(s, \pi_v \otimes \chi_v) = \mathrm{Ind}_{P(F_v)}^{G_n(F_v)} (\pi_v |\det|_v^s \otimes \chi_v).$$

Then, there is a finite set of places S_f, which contains all archimedean places, such that the local component π_v of π is unramified and $f_{s,v} = f_{s,v}^\circ$ for all

places $v \notin S_f$, where $f^\circ_{s,v}$ is the unramified vector in $I(s, \pi_v \otimes \chi_v)$ normalized by the condition that $f^\circ_{s,v}$ takes value one on the identity element of $G_n(F_v)$. The action of the global normalized intertwining operator decomposes as

$$\begin{aligned} N(s, \pi \otimes \chi, w_0) f_s &= \otimes_v N(s, \pi_v \otimes \chi_v, w_0) f_{s,v} \\ &= \Big(\otimes_{v \in S_f} N(s, \pi_v \otimes \chi_v, w_0) f_{s,v} \Big) \otimes \Big(\otimes_{v \notin S_f} \widetilde{f}^\circ_{-s,v} \Big), \end{aligned}$$

where $\widetilde{f}^\circ_{-s,v}$ is the unramified vector in the representation $I(-s, w_0(\pi_v))$ normalized by the condition that it takes value one on the identity element of $G_n(F_v)$. This decomposition implies that the holomorphy and non-vanishing of the global intertwining operator is reduced to the same result for the local normalized intertwining operator at every place v.

The holomorphy of $N(s, \pi_v \otimes \chi_v, w_0)$ for the values s of the complex parameter such that $Re(s) \geq 0$ now follows in the same way as in the proof of Proposition 3.6 in [6]. The better bound is obtained, because in the Levi factor of the Siegel parabolic subgroup there is no general spin group of smaller rank. For convenience of the reader we sketch the proof below.

Since π_v is a local component of a cuspidal automorphic representation of $GL_r(\mathbb{A})$, it is unitary and generic. According to the classification of irreducible unitary representations of the general linear group in [41] over a p-adic field and in [50] over an archimedean field, and the standard module conjecture for the general linear group in [52] over a p-adic field and in [49] over an archimedean field, the representation π_v is isomorphic to the fully induced representation

$$\pi_v \cong \mathrm{Ind}_{Q(F_v)}^{GL_r(F_v)} \left(\delta_1 |\det|_v^{\alpha_1} \otimes \cdots \otimes \delta_k |\det|_v^{\alpha_k} \right),$$

where Q is an appropriate parabolic subgroup of GL_r with the Levi factor isomorphic to a product of general linear groups of smaller rank, the representations δ_j are unitary square-integrable representations of the smaller general linear groups in the Levi factor of Q, and α_j are real numbers such that $|\alpha_j| < 1/2$.

As in the proof of Proposition 3.6 in [6], by the decomposition of the intertwining operators and induction in stages, it is sufficient to check the holomorphy of each factor viewed as an intertwining operator for a maximal parabolic subgroup in a certain smaller group. In the case of the Siegel parabolic subgroup, the factors are simpler than in the general case. They are all either of the form

$$N(2s + \alpha_i + \alpha_j, \delta_i \otimes \widetilde{\delta}_j),$$

where $i < j$ and $\widetilde{\delta}_j$ is the contragredient of δ_j, which is the normalized intertwining operator associated to a square-integrable representation of a maximal parabolic subgroup in the general linear group, or of the form

$$N(s + \alpha_i, \delta_i),$$

which is the normalized intertwining operator associated to a square-integrable representation of the Levi factor of the Siegel parabolic subgroup of a smaller general spin group. The former are holomorphic for the values of the complex parameter s such that

$$Re(2s + \alpha_i + \alpha_j) > -1$$

by [33], and the latter are holomorphic for the values of s such that

$$Re(s + \alpha_i) > -1/2$$

by [53]. The assumptions in [53] are all proved in the case of general spin groups, as explained in [6]. The above inequalities are all satisfied by the values of s such that $Re(s) \geq 0$, since $|\alpha_i| < 1/2$. Thus, all the factors are holomorphic for such s, as required.

The non-vanishing of $N(s, \pi_v \otimes \chi_v, w_0)$ is a consequence of holomorphy by Zhang's lemma [53]. □

We are now ready to prove the main result of this section, which relates the poles of the ratio of the twisted symmetric and exterior square automorphic L-function to the constituents of the discrete spectrum $L^2_{\text{disc}}(G_n, \chi)$ of $G_n(\mathbb{A})$.

THEOREM 3.2. *Let π be a cuspidal automorphic representation of $GL_r(\mathbb{A})$ and χ a unitary Hecke character, normalized as in Convention made in Section 3. Let either $n = 2r + 1$ or $n = 2r$. Let $E(f_s, g)$ be the Eisenstein series on the general spin group $G_n(\mathbb{A})$ associated to the cuspidal automorphic representation $\pi \otimes \chi$ of the Levi factor $M(\mathbb{A})$ of the Siegel parabolic subgroup P of G_n. Then, the poles of the Eisentstein series $E(f_s, g)$ for the values of the complex parameter s in the region $Re(s) > 0$ coincide with the poles of the ratio of the automorphic L-functions*

$$\frac{L(z, \pi, R)}{L(1 + z, \pi, R)}$$

at the value $z = 2s$ of the complex parameter, where $R = Sym^2 \otimes \chi$ if $n = 2r + 1$, and $R = \wedge^2 \otimes \chi$ if $n = 2r$. In particular, if $z_0 > 0$ is a positive real number such that the ratio above has a pole at $z = z_0$, then there exists a non-trivial summand Π in the discrete spectrum $L^2_{\text{disc}}(G_n, \chi)$ of the general spin group $G_n(\mathbb{A})$ such that $\Pi \cong \otimes_v \Pi_v$ and Π_v is a quotient of the parabolically induced representation

$$I(z_0/2, \pi_v \otimes \chi_v)$$

for every place v.

PROOF. According to Lemma 3.1, the poles of $E(f_s, g)$ at the values s of its complex parameter such that $Re(s) > 0$ coincide with the poles of the normalizing factor

$$\frac{L(2s, \pi, R)}{\varepsilon(2s, \pi, R) L(1 + 2s, \pi, R)},$$

where R is as in the statement of the theorem. Since the ε-factor is entire and non-zero, the first claim of the theorem follows.

Suppose now that $z_0 > 0$ is the pole of the ratio

$$\frac{L(z,\pi,R)}{L(1+z,\pi,R)},$$

then the Eisenstein series $E(f_s,g)$ has a pole at $2s = z_0$, i.e., $s = z_0/2$. By the general theory of Eisenstein series [34], the residues of $E(f_s,g)$ at the pole $s = z_0/2 > 0$ span a residual representation Π of $G_n(\mathbb{A})$, that is, Π is a summand in $L^2_{\mathrm{disc}}(G_n,\chi)$. Let $\Pi \cong \otimes_v \Pi_v$ be the decomposition of Π into a restricted tensor product. Then, Π_v is isomorphic to the image of the normalized intertwining operator $N(s,\pi_v \otimes \chi_v, w_0)$ at $s = z_0/2$. Since this intertwining operator intertwines the induced representation $I(z_0/2,\pi_v\otimes\chi_v)$, its image is isomorphic to a quotient of that induced representation, as claimed. □

4. Holomorphy of L-functions in the non-self-dual case

In this section we treat the case in which the analytic properties of the twisted symmetric and exterior square automorphic L-functions are obtained independently of the endoscopic classification.

Let χ be a unitary Hecke character of the group of idèles $\mathbb{I}$. A cuspidal automorphic representation π of $GL_m(\mathbb{A})$ is called χ-self-dual (or twisted self-dual), if it satisfies

$$\pi \cong \widetilde{\pi} \otimes \chi,$$

where $\widetilde{\pi}$ is the contragredient representation of π. Recall Convention made in Section 3, which says that it is always assumed that cuspidal automorphic representations of $GL_m(\mathbb{A})$ are normalized in such a way that the poles of the associated Eisenstein series and the automorphic L-functions are real.

In this section, we consider the case of a cuspidal automorphic representation π of $GL_r(\mathbb{A})$ which is not χ-self-dual. We begin with the lemma that describes the analytic properties of Eisenstein series associated to such π and χ.

Lemma 4.1. *Let π be a cuspidal automorphic representation of $GL_r(\mathbb{A})$ which is not χ-self-dual, that is, $\pi \ncong \widetilde{\pi}\otimes\chi$. Let either $n = 2r+1$ or $n = 2r$. Let $E(f_s,g)$ be the Eisenstein series on the general spin group $G_n(\mathbb{A})$ associated to the cuspidal automorphic representation $\pi\otimes\chi$ of the Levi factor $M(\mathbb{A})$ of the Siegel parabolic subgroup P of G_n. Then, the Eisenstein series $E(f_s,g)$ is holomorphic for the value s of its complex parameter such that $Re(s) \geq 0$.*

Proof. According to the general theory of Eisenstein series, the necessary condition for the existence of the pole of $E(f_s,g)$ in the right half-plane $Re(s) \geq 0$ is that P is self-associate and π is χ-self-dual. See [34, Sect. IV.3.12] for more details. Since we are now dealing with the case of π not χ-self-dual,

the Eisenstein series $E(f_s, g)$ is holomorphic in the right half-plane $Re(s) \geq 0$. □

THEOREM 4.2. *Let π be a cuspidal automorphic representation of $GL_r(\mathbb{A})$ and χ a unitary Hecke character of the group of idèles $\mathbb{I}$. Suppose that π is not χ-self-dual, that is, $\pi \ncong \widetilde{\pi} \otimes \chi$. Then, the twisted symmetric and exterior automorphic L-functions*

$$L(z, \pi, Sym^2 \otimes \chi) \quad \textit{and} \quad L(z, \pi, \wedge^2 \otimes \chi)$$

are entire as functions of their complex parameter z, and non-zero for the values of z such that $Re(z) \leq 0$ and $Re(z) \geq 1$.

PROOF. Consider the Eisenstein series $E(f_s, g)$ on the general spin group $G_n(\mathbb{A})$ associated to the cuspidal automorphic representation $\pi \otimes \chi$ of the Levi factor $M(\mathbb{A})$ of the Siegel parabolic subgroup P of G_n, where either $n = 2r+1$ or $n = 2r$. According to Lemma 4.1, the Eisenstein series $E(f_s, g)$ is holomorphic for the values s of their complex parameter such that $Re(s) \geq 0$.

For the non-vanishing of the automorphic L-functions, we follow the method of Shahidi and consider the non-constant Fourier coefficient $E(f_s, g)_\psi$ of the Eisenstein series $E(f_s, g)$ with respect to a non-trivial continuous additive character ψ of $F \backslash \mathbb{A}$. Its evaluation at the identity element e of $G_n(\mathbb{A})$ can be written as

$$E(f_s, e)_\psi = \frac{1}{L^S(1 + 2s, \pi, R)} \prod_{v \in S} W_v(e_v),$$

where $R = Sym^2 \otimes \chi$ if $n = 2r + 1$ and $R = \wedge^2 \otimes \chi$ if $n = 2r$, and S is a finite set of places, containing all archimedean places, and such that the local components π_v, χ_v and ψ_v are unramified for all $v \notin S$. The function $L^S(1 + 2s, \pi, R)$ is the partial L-function associated to $\pi \otimes \chi$ and R, defined as the product of the unramified local L-functions over all places $v \notin S$. For $v \in S$, the function $W_v(e_v)$ is the ψ_v-Whittaker function associated to the section $f_{s,v}$ and e_v is the identity element of $G_n(F_v)$. See [37] and [40, Sect. 7] for more details.

As in [40, Sect. 7.2], there is a choice of the local data such that $W_v(e_v)$ is non-zero for every $v \in S$. The Fourier coefficient $E(f_s, g)_\psi$ is holomorphic at the values of s such that $Re(s) \geq 0$, because the same holds for the Eisenstein series $E(f_s, g)$. Hence, the partial L-function $L^S(1 + 2s, \pi, R)$ in the denominator must be non-zero for the values of s such that $Re(s) \geq 0$. It follows that the partial L-function $L^S(z, \pi, R)$ is non-zero for the values z of its complex parameter such that $Re(z) \geq 1$. Since the local L-functions at the remaining places are non-vanishing, the same holds for the complete L-function $L(z, \pi, R)$. The non-vanishing in the left half-plane $Re(z) \leq 0$ follows by the functional equation for automorphic L-functions. This proves the claim regarding the non-vanishing of $L(z, \pi, R)$.

For the holomorphy, consider first the Rankin–Selberg automorphic L-function $L(z, \pi \times (\pi \otimes \chi))$ of the pair of cuspidal automorphic representations π and $\pi \otimes \chi$ of $GL_r(\mathbb{A})$. It can be decomposed into the product

$$L(z, \pi \times (\pi \otimes \chi)) = L(z, \pi, Sym^2 \otimes \chi) L(z, \pi, \wedge^2 \otimes \chi),$$

of the twisted symmetric and exterior square automorphic L-functions. This follows from the direct sum decomposition of the twisted tensor product of the standard representations of $GL_r(\mathbb{C})$ into a direct sum of the twisted symmetric and exterior square of the standard representation of $GL_r(\mathbb{C})$. See [23, Sect. 2.2] for more details.

The analytic properties of the Rankin–Selberg L-functions of pairs are well-known from [25], [26], [24], [33]. Since π is not χ-self-dual, the Rankin–Selberg L-function $L(z, \pi \times (\pi \otimes \chi))$ is entire. We already proved that the twisted symmetric and exterior square L-functions on the right-hand side are non-zero for the values z such that $Re(z) \geq 1$. It follows that they are both holomorphic for z such that $Re(z) \geq 1$. Otherwise, the pole at z such that $Re(z) \geq 1$ of any of the L-functions $L(z, \pi, R)$ would produce the pole at z with $Re(z) \geq 1$ of the Rankin–Selberg L-function, which would be a contradiction. The holomorphy in the left half-plane $Re(s) \leq 0$ is now a consequence of the functional equation.

It remains to prove the holomorphy of $L(z, \pi, R)$ at the values z such that $0 < Re(z) < 1$. Suppose that there is z_0 such that $0 < Re(z_0) < 1$ and the automorphic L-function $L(z, \pi, R)$ has a pole at $z = z_0$. Then, the ratio of L-functions

$$\frac{L(2s, \pi, R)}{L(1 + 2s, \pi, R)}$$

has a pole at the value of s such that $2s = z_0$, because in the denominator $Re(1 + 2s) = Re(1 + z_0) > 1$ and we already proved the holomorphy of $L(z, \pi, R)$ in that region. Invoking Theorem 3.2 implies that the Eisenstein series $E(f_s, g)$ associated to $\pi \otimes \chi$ has a pole at $s = z_0/2$ with $Re(s) > 0$. This is a contradiction to Lemma 4.1, so that the theorem is proved. □

5. Endoscopic classification

The endoscopic classification of the discrete spectrum $L^2_{\text{disc}}(G_n, \chi)$ of the general spin group $G_n(\mathbb{A})$ in terms of Arthur parameters is formulated, without proof, in [2], at least in the case of odd n. However, the case of even n is analogous. In this section, we recall the definition of Arthur parameters for the general spin groups, and explain how endoscopic transfer would provide the classification in terms of discrete spectra of general linear groups.

Lemma 5.1. *Let π be a χ-self-dual cuspidal automorphic representation of $GL_m(\mathbb{A})$, that is, $\pi \cong \widetilde{\pi} \otimes \chi$, normalized as in Convention made in Section 3. Then, exactly one of the automorphic L-functions $L(z, \pi, Sym^2 \otimes \chi)$ and*

$L(z, \pi, \wedge^2 \otimes \chi)$ has a pole of order one at $z = 0$ and $z = 1$, and the other L-function is holomorphic at $z = 0$ and $z = 1$.

PROOF. Consider the Rankin–Selberg automorphic L-function $L(z, \pi \times (\pi \otimes \chi))$ of the pair of cuspidal automorphic representations π and $\pi \otimes \chi$ of $GL_r(\mathbb{A})$, which we already used in the proof of Theorem 4.2. In the case of χ-self-dual π, it is holomorphic, except for the poles of order one at $z = 0$ and $z = 1$. These facts are the result of the theory of integral representations of L-functions, developed in this case in [25], [26], [24], see also [33].

Consider again the decomposition

$$L(z, \pi \times (\pi \otimes \chi)) = L(z, \pi, Sym^2 \otimes \chi) L(z, \pi, \wedge^2 \otimes \chi),$$

as in the proof of Theorem 4.2. According to [37], [39], the L-functions on the right-hand side are non-zero at $z = 0$ and $z = 1$. Hence, in the case of χ-self-dual π, exactly one of the L-functions on the right-hand side has a pole at $z = 0$ and $z = 1$, and that pole is of order one. □

The lemma provides a way to make a distinction between two types of χ-self-dual cuspidal automorphic representations of $GL_m(\mathbb{A})$, depending on the L-function that has a pole at $z = 1$. These two types are called the orthogonal and symplectic type, because they are precisely the functorial transfers from similitude orthogonal and symplectic groups.

DEFINITION 5.2. *The χ-self-dual cuspidal automorphic representation π of $GL_m(\mathbb{A})$ is orthogonal, resp. symplectic, if the automorphic L-function $L(z, \pi, Sym^2 \otimes \chi)$, resp. $L(z, \pi, \wedge^2 \otimes \chi)$, associated to π, has a pole at $z = 1$.*

Consider now χ as a unitary Hecke character which is the similitude character of G_n. The set $\Psi_2(G_n, \chi)$ of Arthur parameters for $L^2_{\mathrm{disc}}(G_n, \chi)$ is defined as follows.

DEFINITION 5.3. *An Arthur parameter for $L^2_{\mathrm{disc}}(G_n, \chi)$ is an unordered formal sum*

$$\psi = (\mu_1 \boxtimes \nu_1) \boxplus \cdots \boxplus (\mu_\ell \boxtimes \nu_\ell)$$

of formal tensor products $\mu_i \boxtimes \nu_i$, such that

- *(i) the positive integers $m_1, \ldots, m_\ell$ and $n_1, \ldots, n_\ell$ are such that $m_1 n_1 + \cdots + m_\ell n_\ell = 2r$,*
- *(ii) μ_i is a χ-self-dual cuspidal automorphic representation of $GL_{m_i}(\mathbb{A})$, for $i = 1, \ldots, \ell$,*
- *(iii) ν_i is the unique irreducible algebraic representation of $SL_2(\mathbb{C})$ of dimension n_i, for $i = 1, \ldots, \ell$,*
- *(iv) $\mu_i \boxtimes \nu_i$ are all distinct, i.e., for $i \neq j$, we have $\mu_i \ncong \mu_j$ or $n_i \neq n_j$,*
- *(v) the central characters ω_{μ_i} of μ_i, for $i = 1, \ldots, \ell$, and χ satisfy a compatibility condition $\omega_{\mu_i}^{n_i} = \chi$,*
- *(vi) the type of representations μ_i, for $i = 1, \ldots, \ell$, is determined as follows:*

- *if* $n = 2r+1$ *is odd, then* $\begin{array}{l}\mu_i \text{ is of symplectic type, if } n_i \text{ is odd,}\\ \mu_i \text{ is of orthogonal type, if } n_i \text{ is even,}\end{array}$
- *if* $n = 2r$ *is even, then* $\begin{array}{l}\mu_i \text{ is of orthogonal type, if } n_i \text{ is odd,}\\ \mu_i \text{ is of symplectic type, if } n_i \text{ is even.}\end{array}$

The set of such Arthur parameters is denoted by $\Psi_2(G_n, \chi)$*. Note that the adjective unordered means that two formal sums that differ only by the order of summands are considered equal.*

The Arthur packet Π_ψ of automorphic representations of $G_n(\mathbb{A})$ with the similitude character χ is associated to each Arthur parameter $\psi \in \Psi_2(G_n, \chi)$ as in [3]. The members of Arthur packets are candidates for the constituents of the discrete spectrum $L^2_{\text{disc}}(G_n, \chi)$. The endoscopic classification of the discrete spectrum $L^2_{\text{disc}}(G_n, \chi)$ is then given by a multiplicity formula for members of Arthur packets, which singles out those members of Arthur packets which contribute with non-zero multiplicity. The multiplicity formula amounts to a parity condition precisely defined in the discussion following [4, Thm. 1.5.2].

All representations in the Arthur packet Π_ψ associated to ψ are nearly equivalent to each other, that is, their local components are isomorphic at all but finitely many places. More precisely, given an Arthur parameter $\psi \in \Psi_2(G_n, \chi)$ as a formal sum

$$\psi = (\mu_1 \boxtimes \nu_1) \boxplus \cdots \boxplus (\mu_\ell \boxtimes \nu_\ell),$$

then, for every representation in the Arthur packet Π_ψ, its local component at all but finitely many places is the unramified representation of $G_n(F_v)$ given by the Satake parameter

$$c(\psi_v) = \bigoplus_{i=1}^{\ell} \left(c(\mu_{i,v}) \otimes c(\nu_i)\right),$$

where $c(\mu_{i,v})$ is the Satake parameter of the unramified representation $\mu_{i,v}$ of $GL_{m_i}(F_v)$ and

$$c(\nu_i) = \operatorname{diag}\left(q_v^{\frac{n_i-1}{2}}, q_v^{\frac{n_i-3}{2}}, \ldots, q_v^{-\frac{n_i-1}{2}}\right),$$

with q_v the cardinality of the residual field of F_v and n_i the dimension of ν_i.

6. Holomorphy of L-functions in the self-dual case

So far, in Section 4, we proved the analytic properties of the twisted symmetric and exterior square automorphic L-functions of a cuspidal automorphic representation π of $GL_r(\mathbb{A})$ in the case of π that is not χ-self-dual. Those results are independent of the endoscopic classification for general spin groups.

In this section, we consider the case of a cuspidal automorphic representation π of $GL_r(\mathbb{A})$ which is χ-self-dual, that is, $\pi \cong \widetilde{\pi} \otimes \chi$. In what follows we make the assumption, as we may, that π and χ are normalized as in Convention made in Section 3. In the χ-self-dual case, the results below depend on the eventual complete proof of the endoscopic classification of the discrete spectrum $L^2_{\mathrm{disc}}(G_n, \chi)$ of the general spin groups. In other words, we freely use the description elaborated in Section 5.

However, observe that the analytic behavior at $z = 0$ and $z = 1$ of the twisted symmetric and exterior square automorphic L-function in the case of χ-self-dual π is described in Lemma 5.1. Note that this result is also independent of the endoscopic classification. What remains is to determine the analytic properties of the twisted symmetric and exterior square automorphic L-functions $L(z, \pi, Sym^2 \otimes \chi)$ and $L(z, \pi, \wedge^2 \otimes \chi)$ away from the vertical lines $Re(z) = 0$ and $Re(z) = 1$.

We begin with a lemma regarding the analytic properties of the Eisenstein series $E(f_s, g)$ on the general spin group $G_n(\mathbb{A})$ associated to a χ-self-dual cuspidal automorphic representation π of $GL_r(\mathbb{A})$, as defined in Section 3.

LEMMA 6.1. *Let π be a cuspidal automorphic representation of $GL_r(\mathbb{A})$ which is χ-self-dual, that is, $\pi \cong \widetilde{\pi} \otimes \chi$, normalized as in Convention of Section 3. Let either $n = 2r+1$ or $n = 2r$. Let $E(f_s, g)$ be the Eisenstein series on the general spin group $G_n(\mathbb{A})$ associated to a cuspidal automorphic representation $\pi \otimes \chi$ of the Levi factor $M(\mathbb{A})$ of the Siegel parabolic subgroup P of G_n. Then, it would follow from the endoscopic classification of the discrete spectrum of general spin groups that the Eisenstein series $E(f_s, g)$ is holomorphic at the values s of its complex parameter such that $Re(s) \geq 0$ and $s \neq 1/2$.*

PROOF. First of all, by the general theory of Eisenstein series, they are holomorphic on the imaginary axis, so that it is sufficient to give the proof for $Re(s) > 0$. Suppose that the Eisenstein series $E(f_s, g)$ has a pole at $s = s_0$ such that $Re(s_0) > 0$. Then, the residues span a residual representation of $G_n(\mathbb{A})$, which is a direct summand in the discrete spectrum $L^2_{\mathrm{disc}}(G_n, \chi)$. According to Theorem 3.2, it is isomorphic to $\Pi \cong \otimes_v \Pi_v$, where Π_v is a quotient of the parabolically induced representation

$$I(s_0, \pi_v \otimes \chi_v) = \mathrm{Ind}_{P(F_v)}^{G_n(F_v)} (\pi_v |\det|_v^{s_0} \otimes \chi_v) .$$

For the places v at which Π_v is unramified, we have that π_v and χ_v are unramified, so that Π_v is the unramified constituent of the induced representation above. Hence, the Satake parameter of Π_v is

$$c(\Pi_v) = c(\pi_v) \otimes \mathrm{diag}\left(q_v^{s_0}, q_v^{-s_0}\right)$$

at all but finitely many places.

By the endoscopic classification of $L^2_{\text{disc}}(G_n, \chi)$, the representation Π belongs to the Arthur packet Π_ψ, where the parameter ψ is such that

$$c(\psi_v) = c(\Pi_v)$$

at all but finitely many places. Hence, due to the strong multiplicity one for the general linear group [26, Thm. 4.4], the Arthur parameter ψ is necessarily of the form

$$\psi = \pi \boxtimes \nu,$$

where ν should be the unique irreducible representation of $SL_2(\mathbb{C})$ of dimension $2s_0 + 1$, so that the exponents of q_v in the Satake parameters match. But the dimensions should satisfy the condition (i) in Definition 5.3 of Arthur parameters, so that

$$r(2s_0 + 1) = 2r.$$

This implies that $s_0 = 1/2$ as claimed, because otherwise the Arthur parameter required to parameterize Π does not exist. □

We are now ready to prove the main result of this section regarding analytic properties of twisted symmetric and exterior square automorphic L-functions in the case of χ-self-dual cuspidal automorphic representation of $GL_r(\mathbb{A})$.

THEOREM 6.2. *Let χ be a unitary Hecke character of the group of idèles $\mathbb{I}$. Let π be a cuspidal automorphic representation of $GL_r(\mathbb{A})$ which is χ-self-dual, that is, $\pi \cong \widetilde{\pi} \otimes \chi$. Then, it would follow from the endoscopic classification for the general spin groups, that the twisted symmetric and exterior square automorphic L-functions*

$$L(z, \pi, Sym^2 \otimes \chi) \quad \text{and} \quad L(z, \pi, \wedge^2 \otimes \chi)$$

associated to π are holomorphic at the values z of their complex parameter such that $Re(z) \neq 0$ and $Re(z) \neq 1$, and non-zero at the values of z such that $Re(z) \geq 1$ and $Re(z) \leq 0$.

PROOF. It is sufficient to prove the theorem for π normalized as in Convention made in Section 3, so that the possible poles are real.

We begin with the proof of non-vanishing. As in the proof of Theorem 4.2, we use the method of Shahidi [37], [40, Sect. 7], and consider the non-constant Fourier coefficient of the Eisenstein series $E(f_s, g)$ associated to $\pi \otimes \chi$. The same argument as in the proof of Theorem 4.2, relying on Lemma 6.1, implies that the automorphic L-functions $L(z, \pi, R)$ are non-zero at the values z of the complex parameter such that $Re(z) \geq 1$ and $z \neq 2$. The possible zero at $z = 2$ is a consequence of the possible pole of the Eisenstein series $E(f_s, g)$ at $s = 1/2$, obtained in Lemma 6.1.

In order to deal with the remaining issue at $z = 2$, we consider again the decomposition

$$L(z, \pi \times (\pi \otimes \chi)) = L(z, \pi, Sym^2 \otimes \chi) L(z, \pi, \wedge^2 \otimes \chi)$$

of the Rankin–Selberg L-function of pairs, as in the proof of Theorem 4.2 and Lemma 5.1. According to [24], [25], [26], [33], the Rankin–Selberg L-function is holomorphic and non-zero at the values z of its complex parameter such that $Re(z) > 1$. Hence, if one of the automorphic L-functions on the right-hand side has a zero at $z = 2$, then the other one would have a pole at $z = 2$. Suppose that $L(z, \pi, \wedge^2 \otimes \chi)$ has a zero at $z = 2$ and that $L(z, \pi, Sym^2 \otimes \chi)$ has a pole at $z = 2$. The other possibility is treated in the same way.

Consider the Eisenstein series $E(f_s, g)$ on the general spin group $G_{2r+1}(\mathbb{A})$ associated to $\pi \otimes \chi$. According to Theorem 3.2, if the ratio

$$\frac{L(z, \pi, Sym^2 \otimes \chi)}{L(1 + z, \pi, Sym^2 \otimes \chi)}$$

of automorphic L-functions had a pole at $z = z_0 > 0$, then the Eisenstein series $E(f_s, g)$ would have a pole at $s = z_0/2 > 0$. By Lemma 6.1, the Eisenstein series $E(f_s, g)$ is holomorphic at $s = 1$, which implies that the above ratio of automorphic L-functions is holomorphic at $z = 2$. Since the numerator has a pole at $z = 2$, it must be cancelled by the pole of the denominator at $z = 2$. This means that the L-function $L(z, \pi, Sym^2 \otimes \chi)$ has a pole at $z = 3$. But the Rankin–Selberg L-function in the product decomposition above is holomorphic at $z = 3$. Thus, the pole of $L(z, \pi, Sym^2 \otimes \chi)$ must be cancelled by a zero of $L(z, \pi, \wedge^2 \otimes \chi)$ at $z = 3$. However, we already proved that $L(z, \pi, \wedge^2 \otimes \chi)$ is non-zero at $z = 3$, so that we obtain a contradiction which proves that $L(z, \pi, \wedge^2 \otimes \chi)$ is non-zero at $z = 2$ as well.

This proves that the twisted symmetric and exterior square automorphic L-functions $L(z, \pi, R)$ are non-zero in the right half-plane $Re(z) \geq 1$. The non-vanishing in the left half-plane $Re(s) \leq 0$ follows by the functional equation.

For the holomorphy of $L(z, \pi, R)$, we first consider the right half-plane $Re(z) > 1$. In this half-plane, the Rankin–Selberg L-function $L(z, \pi \times (\pi \otimes \chi))$ is holomorphic and non-zero according to [24], [25], [26], [33]. We already proved that the twisted symmetric and exterior square automorphic L-functions are non-zero in the same right half-plane. It follows that both L-functions are holomorphic at values z such that $Re(z) > 1$, because otherwise the pole would produce a pole of the Rankin–Selberg L-function.

It remains to prove the holomorphy of $L(z, \pi, R)$ in the critical strip, that is, at the values z such that $0 < Re(z) < 1$. Suppose that $L(z, \pi, R)$ has a pole at $z = z_0$ such that $0 < z_0 < 1$. Since we already proved that $L(z, \pi, R)$

is holomorphic at z such that $Re(z) > 1$, the ratio of automorphic L-functions

$$\frac{L(z, \pi, R)}{L(1 + z, \pi, R)}$$

has a pole at $z = z_0$. According to Theorem 3.2, it follows that the Eisenstein series $E(f_s, g)$ on the general spin group $G_n(\mathbb{A})$ associated to $\pi \otimes \chi$ has a pole at $s = z_0/2$, where $n = 2r + 1$ if $R = Sym^2 \otimes \chi$ and $n = 2r$ if $R = \wedge^2 \otimes \chi$. This is a contradiction to Lemma 6.1, because $0 < s < 1/2$. □

Acknowledgements.

This work is supported by the Croatian Science Foundation [projects HRZZ-IP-2022-10-4615 and HRZZ-IP-2019-04-4216].

References

[1] J. Arthur, *Unipotent automorphic representations: global motivation*, in: Automorphic forms, Shimura varieties, and L-functions, Vol. I (Ann Arbor, MI, 1988), Perspect. Math., vol. **10**, Academic Press, Boston, MA, 1990, pp. 1–75.

[2] J. Arthur, *Automorphic representations of $GSp(4)$*, in: Contributions to automorphic forms, geometry, and number theory, Johns Hopkins Univ. Press, Baltimore, MD, 2004, pp. 65–81.

[3] J. Arthur, *An introduction to the trace formula*, in: Harmonic analysis, the trace formula, and Shimura varieties, Clay Math. Proc., vol. **4**, Amer. Math. Soc., Providence, RI, 2005, pp. 1–263.

[4] J. Arthur, The endoscopic classification of representations. Orthogonal and symplectic groups, American Mathematical Society Colloquium Publications, vol. 61, American Mathematical Society, Providence, RI, 2013.

[5] M. Asgari, *Local L-functions for split spinor groups*, Canad. J. Math. **54** (2002), 673–693.

[6] M. Asgari and F. Shahidi, *Generic transfer for general spin groups*, Duke Math. J. **132** (2006), 137–190.

[7] D. D. Belt, On the holomorphy of exterior-square L-functions, Thesis (Ph.D.) – Purdue University, ProQuest LLC, Ann Arbor, MI, 2012.

[8] C. Blondel, *Covers and propagation in symplectic groups*, in: Functional analysis IX, Various Publ. Ser. (Aarhus), vol. **48**, Univ. Aarhus, Aarhus, 2007, pp. 16–31.

[9] A. Borel, *Regularization theorems in Lie algebra cohomology. Applications*, Duke Math. J. **50** (1983), 605–623.

[10] A. Borel and H. Jacquet, *Automorphic forms and automorphic representations*, in: Automorphic forms, representations and L-functions, Proc. Sympos. Pure Math., XXXIII, Part 1, Amer. Math. Soc., Providence, R.I., 1979, pp. 189–202.

[11] A. Borel and N. Wallach, Continuous cohomology, discrete subgroups, and representations of reductive groups, second ed., Mathematical Surveys and Monographs, vol. **67**, American Mathematical Society, Providence, RI, 2000.

[12] J. Franke, *Harmonic analysis in weighted L_2-spaces*, Ann. Sci. École Norm. Sup. (4) **31** (1998), 181–279.

[13] N. Grbac, *On the residual spectrum of split classical groups supported in the Siegel maximal parabolic subgroup*, Monatsh. Math. **163** (2011), 301–314.

[14] N. Grbac, *Analytic properties of automorphic L-functions and Arthur classification*, in: Automorphic Forms and Related Zeta Functions, RIMS Kôkyûroku, vol. **1934**, Research Institute for Mathematical Sciences, Kyoto, 2015, pp. 26–39.
[15] N. Grbac, *Eisenstein cohomology and automorphic L-functions*, in: Cohomology of arithmetic groups, Springer Proc. Math. Stat., vol. 245, Springer, Cham, 2018, pp. 35–50.
[16] N. Grbac and H. Grobner, *The residual Eisenstein cohomology of Sp_4 over a totally real number field*, Trans. Amer. Math. Soc. **365** (2013), 5199–5235.
[17] N. Grbac and J. Schwermer, *On Eisenstein series and the cohomology of arithmetic groups*, C. R. Math. Acad. Sci. Paris **348** (2010), 597–600.
[18] N. Grbac and J. Schwermer, *On residual cohomology classes attached to relative rank one Eisenstein series for the symplectic group*, Int. Math. Res. Not. IMRN **2011** (2011), 1654–1705.
[19] N. Grbac and J. Schwermer, *Eisenstein series, cohomology of arithmetic groups, and automorphic L-functions at half integral arguments*, Forum Math. **26** (2014), 1635–1662.
[20] N. Grbac and J. Schwermer, *A construction of residues of Eisenstein series and related square-integrable classes in the cohomology of arithmetic groups of low k-rank*, Forum Math. **31** (2019), 1225–1263.
[21] N. Grbac and J. Schwermer, *Eisenstein series for rank one unitary groups and some cohomological applications*, Adv. Math. **376** (2021), Paper No. 107438, 48 pages.
[22] N. Grbac and F. Shahidi, *Endoscopic transfer for unitary groups and holomorphy of Asai L-functions*, Pacific J. Math. **276** (2015), 185–211.
[23] J. Hundley and E. Sayag, Descent construction for GSpin groups, Mem. Amer. Math. Soc. **243** (2016), no. 1148, v+124.
[24] H. Jacquet, I. I. Piatetskii-Shapiro and J. A. Shalika, *Rankin-Selberg convolutions*, Amer. J. Math. **105** (1983), 367–464.
[25] H. Jacquet and J. A. Shalika, *On Euler products and the classification of automorphic representations. I*, Amer. J. Math. **103** (1981), 499–558.
[26] H. Jacquet and J. A. Shalika, *On Euler products and the classification of automorphic forms. II*, Amer. J. Math. **103** (1981), 777–815.
[27] E. Kaplan and S. Yamana, *Twisted symmetric square L-functions for* GL_n *and invariant trilinear forms*, Math. Z. **285** (2017), 739–793.
[28] H. H. Kim, *Automorphic L-functions*, in: Lectures on automorphic L-functions, Fields Inst. Monogr., vol. **20**, Amer. Math. Soc., Providence, RI, 2004, pp. 97–201.
[29] Y. Kim, *Strongly positive representations of even GSpin groups*, Pacific J. Math. **280** (2016), 69–88.
[30] Y. Kim, *Langlands-Shahidi L-functions for GSpin groups and the generic Arthur packet conjecture*, Trans. Amer. Math. Soc. **374** (2021), 2559–2580.
[31] R. P. Langlands, On the functional equations satisfied by Eisenstein series, Lecture Notes in Mathematics, Vol. **544**, Springer-Verlag, Berlin-New York, 1976.
[32] I. Matić, *Levi subgroups of p-adic* $\mathrm{Spin}(2n+1)$, Math. Commun. **14** (2009), 223–233.
[33] C. Mœglin and J.-L. Waldspurger, *Le spectre résiduel de $GL(n)$*, Ann. Sci. École Norm. Sup. (4) **22** (1989), 605–674.
[34] C. Mœglin and J.-L. Waldspurger, Spectral decomposition and Eisenstein series, Cambridge Tracts in Mathematics, vol. **113**, Cambridge University Press, Cambridge, 1995.
[35] C. P. Mok, Endoscopic classification of representations of quasi-split unitary groups, Mem. Amer. Math. Soc. **235** (2015), no. 1108, vi+248.
[36] P. J. Sally, Jr. and M. Tadić, *Induced representations and classifications for* $\mathrm{GSp}(2,F)$ *and* $\mathrm{Sp}(2,F)$, Mém. Soc. Math. France (N.S.) (1993), no. 52, 75–133.

[37] F. Shahidi, *On the Ramanujan conjecture and finiteness of poles for certain L-functions*, Ann. of Math. (2) **127** (1988), 547–584.
[38] F. Shahidi, *A proof of Langlands' conjecture on Plancherel measures; complementary series for p-adic groups*, Ann. of Math. (2) **132** (1990), 273–330.
[39] F. Shahidi, *On non-vanishing of twisted symmetric and exterior square L-functions for* GL(n), Pacific J. Math. (1997), Special Issue, Olga Taussky-Todd: in memoriam, 311–322.
[40] F. Shahidi, Eisenstein series and automorphic L-functions, American Mathematical Society Colloquium Publications, vol. **58**, American Mathematical Society, Providence, RI, 2010.
[41] M. Tadić, *Classification of unitary representations in irreducible representations of general linear group (non-Archimedean case)*, Ann. Sci. École Norm. Sup. (4) **19** (1986), 335–382.
[42] M. Tadić, *On Jacquet modules of induced representations of p-adic symplectic groups*, in: Harmonic analysis on reductive groups (Brunswick, ME, 1989), Progr. Math., vol. **101**, Birkhäuser Boston, Boston, MA, 1991, pp. 305–314.
[43] M. Tadić, *Representations of classical p-adic groups*, in: Representations of Lie groups and quantum groups (Trento, 1993), Pitman Res. Notes Math. Ser., vol. **311**, Longman Sci. Tech., Harlow, 1994, pp. 129–204.
[44] M. Tadić, *Representations of p-adic symplectic groups*, Compositio Math. **90** (1994), 123–181.
[45] M. Tadić, *Structure arising from induction and Jacquet modules of representations of classical p-adic groups*, J. Algebra **177** (1995), 1–33.
[46] M. Tadić, *On reducibility of parabolic induction*, Israel J. Math. **107** (1998), 29–91.
[47] S. Takeda, *The twisted symmetric square L-function of* GL(r), Duke Math. J. **163** (2014), 175–266.
[48] S. Takeda, *On a certain metaplectic Eisenstein series and the twisted symmetric square L-function*, Math. Z. **281** (2015), 103–157.
[49] D. A. Vogan, Jr., *Gel′fand-Kirillov dimension for Harish-Chandra modules*, Invent. Math. **48** (1978), 75–98.
[50] D. A. Vogan, Jr., *The unitary dual of* GL(n) *over an Archimedean field*, Invent. Math. **83** (1986), 449–505.
[51] B. Xu, Endoscopic Classification of Representations of $GSp(2n)$ and $GSO(2n)$, Thesis (Ph.D.) – University of Toronto, ProQuest LLC, Ann Arbor, MI, 2014.
[52] A. V. Zelevinsky, *Induced representations of reductive* $\mathfrak{p}$*-adic groups. II. On irreducible representations of* $GL(n)$, Ann. Sci. École Norm. Sup. (4) **13** (1980), 165–210.
[53] Y. Zhang, *The holomorphy and nonvanishing of normalized local intertwining operators*, Pacific J. Math. **180** (1997), 385–398.

Endoskopski transfer i automorfne L-funkcije: slučaj opće spinorne grupe i L-funkcija zakrenutog simetričnog i vanjskog kvadrata

Neven Grbac

Sažetak. Endoskopska klasifikacija i Langlandsova spektralna teorija su dva pristupa diskretnom spektru grupe adeličkih točaka reduktivne linearne algebarske grupe definirane nad poljem algebarskih brojeva. Ova dva pogleda na isti objekt imaju zanimljive posljedice. U ovom radu, promatra se slučaj opće spinorne grupe. U tom slučaju, pokazano je kako usporedba dvaju pristupa implicira da su potpune automorfne L-funkcije zakrenutog simetričnog i vanjskog kvadrata pridružene kuspidalnoj automorfnoj reprezentaciji opće linearne grupe holomorfne u kritičnoj pruzi.

Juraj Dobrila University of Pula
Zagrebačka 30, HR-52100 Pula, Croatia
E-mail: neven.grbac@unipu.hr

Received: 16.6.2023.
Revised: 6.9.2023.
Accepted: 19.9.2023.

RAD HAZU. MATEMATIČKE ZNANOSTI
Vol. 28 = 558 (2024): 93-106
DOI: https://doi.org/10.21857/ydkx2cv259

ON THE NON-VANISHING OF SHALIKA NEWVECTORS AT THE IDENTITY

Harald Grobner and Nadir Matringe

Dedicated to Marko Tadić at the occasion of his 70th birthday

Abstract. Let π be an irreducible admissible unitary ψ-generic representation of the non-archimedean general linear group $\mathrm{GL}_{2n}(F)$, which admits an (η,ψ)-Shalika model $\mathcal{S}^{\eta}_{\psi}(\pi)$. In this paper, we show the non-vanishing of all non-zero Shalika newvectors $S^{\circ} \in \mathcal{S}^{\eta}_{\psi}(\pi)$ at the identity matrix $g = id \in \mathrm{GL}_{2n}(F)$, if η is unramified. This complements the analogous result for Whittaker newvectors, which can be read off the formulae established independently by Miyauchi in [Miy14] and the second named author in [Mat13].

Introduction

In the representation theory of local and global groups, model spaces of representations are an indispensable tool. Indeed, such model spaces provide a (usually unique, but in any case) convenient way to describe an *a priori* abstract representation (π, V) of a reductive group G as being realized on a concrete vector space of (usually smooth) functions on G – this being analogous to the fact that a finite-dimensional vector space is isomorphic to a finite number of copies of its ground-field and hence allows a canonical description up to isomorphism.

One of the most studied models of representations, which appear in the Langlands program, is certainly the Whittaker model. Representations, which admit a Whittaker model, are also called generic, subsuming the (highly non-trivial) statements, that local generic representations are fully induced from their Langlands datum (i.e., equal to their "standard module"), whereas the globally generic L^2-automorphic representations of GL_n are precisely the irreducible cuspidal automorphic representations.

2020 *Mathematics Subject Classification.* 11F66, 11F70, 11F85, 22D10.
Key words and phrases. Shalika models, Whittaker models, non-vanishing, local fields.
The first named author is supported by the Austrian Science Fund (FWF) Stand-alone research project P32333.

In particular the latter approach to cusp forms of GL_n comprises a very fruitful combination of local and global techniques: Given an irreducible cuspidal automorphic representation Π of GL_n, the fact that it has local and global Whittaker models allows one to define local L-factors at its ramified places and to show – or, at the very least, to educatedly guess – many desirable properties of Π: The Ramanujan Conjecture being among the most prominent such claims.

In slightly more recent years another type of model space has attracted attention and gained importance in the Langlands program: If one is given a local or global irreducible admissible representation of GL_{2n}, then one may try to attach a so-called *Shalika model* to it. The very ideas underlying its construction resemble the analogous ideas in the theory of Whittaker models, but turn out to be more restrictive and exclusive, than the latter. Indeed, it is not true any more that every irreducible cuspidal automorphic representation Π of GL_{2n} has a Shalika model, but its existence is known – due to work of Jacquet–Shalika – to be equivalent to the partial exterior square L-function of Π having a pole at $s = 1$. In other words, which reflect more the principles of Langlands functoriality, an irreducible cuspidal automorphic representation Π of GL_{2n} has a Shalika model, if and only if it is the standard lift from an irreducible generic cuspidal automorphic representation π of the split special orthogonal group SO_{2n+1}.

However, being a more restrictive concept, the theory of Shalika models in return gains the advantage of allowing more specialized assertions about those cusp forms, to which it applies. See [Ash-Gin94] and [Gro-Rag14] for examples of such results. In particular in the latter reference, a quite solid knowledge of the *local* theory of Shalika models was necessary, in order to yield the desired *global* consequences. However, it turned out that one particular such aspect of the required local theory was not available in the literature and the authors of [Gro-Rag14] (one of them being the first-named author of the present paper) relied on its validity without reference.

It is the goal of this short paper to close this gap and establish the above local result on Shalika models in the greatest possible generality. More precisely, let F be any local non-archimedean field and let π be an irreducible admissible unitary ψ-generic representation of $\mathrm{GL}_{2n}(F)$, which admits an (η, ψ)-Shalika model $\mathcal{S}^{\eta}_{\psi}(\pi)$. We are going to show the non-vanishing of all non-zero Shalika newvectors $S^{\circ} \in \mathcal{S}^{\eta}_{\psi}(\pi)$ at the identity matrix $g = id \in \mathrm{GL}_{2n}(F)$, if η is unramified. This mirrors the analogous result for Whittaker newvectors, which was established independently by Miyauchi in [Miy14] and the second named author in [Mat13] and which has been used in many sources.

Acknowledgements: It is our first and foremost pleasure to thank Marko for accompanying our mathematical lives ever since. The number of scientifically fruitful, mathematically inspiring, and on a human level sheerly great moments with him seem to exceed $\aleph_0$.

HG is also grateful to Binyong Sun for pointing out the need for a result on the local non-vanishing of Shalika newvectors at the identity, i.e., the necessity of writing up a proof of our main result.

1. Basic assumptions and definitions

1.1. *Fields and characters.* Throughout this paper, F will denote a local, non-archimedean field with ring of integers $\mathcal{O}$, maximal ideal $\mathfrak{p}$, valuation $\mathfrak{v}$ and normalized absolute value $|\ .\ | = |\ .\ |_{\mathfrak{v}}$. We fix a non-trivial, unramified additive continuous character $\psi : F \to \mathbb{C}$ and let η be a continuous character $\eta : F^* \to \mathbb{C}^*$. The trivial character is denoted by the symbol $\mathbf{1}$. By M_k we shall denote the algebra of $k \times k$-matrices with entires in F and by N_k the subset of upper triangular elements in M_k. If X is any subset of M_k, we will denote $\mathbf{1}_X$ the characteristic function of X.

1.2. *Local groups.* For any $k \geq 1$, we abbreviate $G_k := \mathrm{GL}_k(F)$, the F-points of the split general linear group over F. The group G_k has some well-known subgroups:

$$\mathcal{P}_k := \left\{ p = \begin{pmatrix} g_{k-1} & 0 \\ 0 & 1 \end{pmatrix} \begin{pmatrix} id_{k-1} & x \\ 0 & 1 \end{pmatrix} \;\middle|\; \begin{array}{l} g_{k-1} \in G_{k-1} \\ x \in F^{k-1} \end{array} \right\},$$

the so-called *mirabolic subgroup*, and U_k, the subgroup of upper triangular unipotent matrices. If $k = 2n$ is even, then there are also the following subgroups:

$$L_{2n} := \left\{ \ell = \begin{pmatrix} g_n & 0 \\ 0 & h_n \end{pmatrix} \;\middle|\; g_n, h_n \in G_n \right\},$$

the Levi subgroup of the "Siegel parabolic", and

$$\mathcal{S}_{2n} := \left\{ s = \begin{pmatrix} g_n & 0 \\ 0 & g_n \end{pmatrix} \begin{pmatrix} id_n & X \\ 0 & id_n \end{pmatrix} \;\middle|\; \begin{array}{l} g_n \in G_n \\ X \in \mathrm{M}_n \end{array} \right\},$$

called the *Shalika subgroup*.

All measures in this note are normalized to give volume 1 to the respective maximal compact subgroups, consisting of $\mathcal{O}$-points.

1.3. *Non-archimedean Shalika models.* The characters η and ψ can be extended to a character $\eta \otimes \psi$ of $\mathcal{S}_{2n}$, using the determinant det, resp. the trace Tr, of matrices

$$s = \begin{pmatrix} g_n & 0 \\ 0 & g_n \end{pmatrix} \begin{pmatrix} 1 & X \\ 0 & 1 \end{pmatrix} \mapsto (\eta \otimes \psi)(s) := \eta(\det(g_n))\psi(Tr(X)).$$

We will also write $\eta(s) := \eta(\det(g_n))$ and $\psi(s) := \psi(Tr(X))$.

DEFINITION 1.1. *Let π be an irreducible admissible representation of G_{2n}. We say that π has a (η,ψ)-Shalika model $\mathcal{S}^{\eta}_{\psi}(\pi)$, if there is a G_{2n}-submodule $\mathcal{S}^{\eta}_{\psi}(\pi)$ of the (unnormalized) smoothly induced representation $Ind_{\mathcal{S}_{2n}}^{G_{2n}}[\eta\otimes\psi]$, which is isomorphic to π.*

REMARK 1.2. (1) By irreducibility of π, the defining condition of Definition 1.1 is obviously equivalent to asserting that there exists an embedding of G_{2n}-representations

$$\pi \hookrightarrow \mathrm{Ind}_{\mathcal{S}_{2n}}^{G_{2n}}[\eta\otimes\psi]. \tag{1.1}$$

(2) It is important to notice that (η,ψ)-Shalika models, if they exist, are unique, i.e., whatever embedding we had chosen in (1.1), their images in $\mathrm{Ind}_{\mathcal{S}_{2n}}^{G_{2n}}[\eta\otimes\psi]$ are all identical: This has been established by Jacquet–Rallis [Jac-Ral96, p.67] for $\eta=\mathbf{1}$ and in general by Chen–Sun in [Che-Sun20], Theorem A.

We will first concentrate on the case when $\eta=\mathbf{1}$. Doing so, we will abbreviate

$$\mathcal{S}_{\psi}(\pi) := \mathcal{S}^{\mathbf{1}}_{\psi}(\pi).$$

2. Whittaker models vs. Shalika models

2.1. *Model comparison.* Let π be an irreducible admissible representation of G_{2n}, which admits a $(\mathbf{1},\psi)$-Shalika model $\mathcal{S}_{\psi}(\pi)$. We will – without big harm[1] – additionally assume that π is unitary and that is has a ψ-Whittaker model

$$\mathcal{W}_{\psi}(\pi)\subseteq \mathrm{Ind}_{U_{2n}}^{G_{2n}}[\psi],$$

where, as usual, ψ is extended to U_{2n} by the rule

$$\begin{pmatrix} 1 & u_{1,2} & & & * \\ & 1 & u_{2,3} & & \\ & & 1 & \ddots & \\ & & & \ddots & u_{2n-1,2n} \\ 0 & & & & 1 \end{pmatrix} \mapsto \psi(u_{1,2}+u_{2,3}+\cdots+u_{2n-1,2n}).$$

Irreducibility together with Schur's lemma implies

$$\dim_{\mathbb{C}} \mathrm{Hom}_{G_{2n}}(\mathcal{W}_{\psi}(\pi),\mathcal{S}_{\psi}(\pi)) = 1.$$

We will now exhibit an explicit, non-trivial intertwining operator

$$\Theta : \mathcal{W}_{\psi}(\pi)\to\mathcal{S}_{\psi}(\pi).$$

[1]This is for the global reasons, that we have in mind: Local components of cuspidal automorphic representations are unitary times a twist by a potentially non-unitary character. The assumption that our representation admits a $(\mathbf{1},\psi)$-Shalika model hence implies that, if it is the local component of a cuspdial automorphic representation, then it is itself unitary. As local components of cuspidal automorphic representations are all ψ-generic, also the second assumption must hold for such local representations.

We start off with

PROPOSITION 2.1. *We have*

$$\mathrm{Hom}_{\mathcal{S}_{2n}\cap\mathcal{P}_{2n}}(\pi,\psi)=\mathrm{Hom}_{\mathcal{S}_{2n}}(\pi,\psi).$$

PROOF. By Frobenius reciprocity and uniqueness of local Shalika models, we obviously have

$$\mathbb{C}\cong\mathrm{Hom}_{\mathcal{S}_{2n}}(\pi,\psi)\subseteq\mathrm{Hom}_{\mathcal{S}_{2n}\cap\mathcal{P}_{2n}}(\pi,\psi).$$

The result then follows from a combination of the following results: By [Mat14], Proposition 4.3, the latter space $\mathrm{Hom}_{\mathcal{S}_{2n}\cap\mathcal{P}_{2n}}(\pi,\psi)$ embeds into $\mathrm{Hom}_{L_{2n}\cap\mathcal{P}_{2n}}(\pi,\mathbf{1})$, whereas it follows from the proof of Corollary 4.18 in [Mat15], that the – again latter – space, $\mathrm{Hom}_{L_{2n}\cap\mathcal{P}_{2n}}(\pi,\mathbf{1})$, has dimension at most 1. This implies the assertion. □

It is an immediate consequence of Proposition 2.1, that if λ is a non-zero element of $\mathrm{Hom}_{\mathcal{S}_{2n}\cap\mathcal{P}_{2n}}(\mathcal{W}_\psi(\pi),\psi)$, then

$$\Theta: W\mapsto(g\mapsto\lambda(g\cdot W)), \tag{2.1}$$

is a non-zero element of $\mathrm{Hom}_{G_{2n}}(\mathcal{W}_\psi(\pi),\mathcal{S}_\psi(\pi))$. In what follows we will determine such a λ.

To this end, consider the Weyl group representative-matrix w_{2n}, corresponding to the permutation of $\{1,\dots,2n\}$:

$$\begin{pmatrix}1&2&\dots&n&n+1&n+2&\dots&2n\\1&3&\dots&2n-1&2&4&\dots&2n\end{pmatrix}$$

and put

$$\lambda(W):=\int_{U_n\backslash\mathcal{P}_n}\int_{\mathrm{N}_n\backslash\mathrm{M}_n}W\left(w_{2n}\begin{pmatrix}id_n&X\\&id_n\end{pmatrix}\begin{pmatrix}p&0\\0&p\end{pmatrix}\right)\psi^{-1}(Tr(X))\,dX\,dp. \tag{2.2}$$

If well-defined, i.e., absolutely convergent, this integral is in

$$\mathrm{Hom}_{\mathcal{S}_{2n}\cap\mathcal{P}_{2n}}(\mathcal{W}_\psi(\pi),\psi).$$

Moreover, λ will be non-zero as the restriction map of Whittaker functions in $\mathcal{W}_\psi(\pi)$ to $\mathcal{P}_{2n}$ contains $\mathrm{Ind}_{U_{2n}}^{\mathcal{P}_{2n}}(\psi)$ in its image, cf. [Ber-Zel76, 5.15, Proposition]. It hence remains to prove the following

PROPOSITION 2.2. *For any $W\in\mathcal{W}_\psi(\pi)$ the integral defining $\lambda(W)$ is absolutely convergent.*

PROOF. Let us introduce some notation: Let A_n denote the standard maximal torus of G_n and recall that the map $a\in A_n\mapsto\mu_n(a)\in A_n$,

$$\mu_n(a):=\mathrm{diag}(a_1\cdots a_n,a_2\cdots a_n,\dots,a_{n-1}a_n,a_n),$$

is a group isomorphism. We will also use the notation

$$\mu_n(a_1,\dots,a_n):=\mu_n(a)$$

for $a \in A_n$. Following the definition in [Jo19, Lemma 3.4], we put
(2.3)

$$\mathfrak{J}_k(W,a) := \int_{\mathrm{N}_k\backslash \mathrm{M}_k} W\left(w_{2n}\begin{pmatrix} id_k & 0 & X & 0 \\ & id_{n-k} & 0 & 0 \\ & & id_k & 0 \\ & & & id_{n-k}\end{pmatrix}\begin{pmatrix} a & \\ & a\end{pmatrix}\right)\psi^{-1}(Tr(X))dX.$$

In fact, as our first observation, by the Iwasawa decomposition, the convergence of $\lambda(W)$ for any W is reduced to that of

$$\int_{a\in A_{n-1}} \mathfrak{J}_n(W,a)\delta_{B_{n-1}}(a)^{-1}da,$$

where $\delta_{B_{n-1}}$ denotes as usual the modulus character of the standard Borel B_{n-1} of G_{n-1}. Now, by the statement of [Jo19, Lemma 3.4], there exists $W' \in \mathcal{W}_\psi(\pi)$ (namely the sum of the W_i's in [Jo19, Lemma 3.4]), such that the following equality holds:

$$\mathfrak{J}_n(W,a) = \frac{\mathfrak{J}_{n-1}(W',a)}{|a_1|^1\dots|a_{n-1}|^{n-1}}.$$

By immediate descending induction on n, one deduces (see [Jo19, p. 505]) that there exists $W'' \in \mathcal{W}_\psi(\pi)$ such that

$$\mathfrak{J}_n(W,a) = \prod_{k=0}^{n-1}|a_k|^{-k(n-k)}W''\left(w_{2n}\begin{pmatrix}\mu_{n-1}(a) & \\ & \mu_{n-1}(a)\end{pmatrix}\right).$$

Hence the convergence of $\lambda(W)$ for any $W \in \mathcal{W}_\psi(\pi)$ is reduced to that of

$$\int_{A_{n-1}}\prod_{k=0}^{n-1}|a_k|^{-k(n-k)}W\left(w_{2n}\begin{pmatrix}\mu_{n-1}(a) & \\ & \mu_{n-1}(a)\end{pmatrix}\right)\delta_{B_{n-1}}(\mu_{n-1}(a))^{-1}da$$

for any $W \in \mathcal{W}_\psi(\pi)$. Note that
(2.4)

$$w_{2n}\,\mathrm{diag}(\mu_{n-1}(a),1,\mu_{n-1}(a),1)w_{2n}^{-1} = \mu_{2n}(1,a_1,1,a_2,\dots,1,a_{n-1},1,1).$$

Hence applying the asymptotic expansion of [Mat11, Theorem 2.1] or rather its corrected version Theorem 2.1 in https://arxiv.org/abs/1004.1315v2 (see also [Jo19, Proposition 3.1]), it is sufficient to check that integrals of the following form converge:

$$\int_{A_{n-1}}\prod_{k=1}^{n-1}|a_k|^{-k(n-k)}\prod_{k=1}^{n-1}|a_k|^{2k(n-k)}\prod_{k=1}^{n-1}\omega_k(a_k)\mathrm{v}(a_k)^{m_k}\Phi(a_k)\delta_{B_{n-1}}(\mu_{n-1}(a))^{-1}da.$$

Here, ω_k is the central character of an irreducible subquotient of the derivative $\pi^{(2n-2k)}$ of π (see [Ber-Zel77, 4.3] for the definition of Bernstein-Zelevinsky derivatives), $m_k \in \mathbb{N}$ and Φ is a Schwartz function on F. However, this

integral equals

$$\begin{aligned}&\int_{A_{n-1}} \prod_{k=1}^{n-1} |a_k|^{k(n-k)} \prod_{k=1}^{n-1} \omega_k(a_k)\mathsf{v}(a_k)^{m_k}\Phi(a_k)\delta_{B_{n-1}}(\mu_{n-1}(a))^{-1}da\\ &\quad= \int_{A_{n-1}} \prod_{k=1}^{n-1} \omega_k(a_k)\mathsf{v}(a_k)^{m_k}\Phi(a_k)|\det(\mu_{n-1}(a))|da\\ &\quad\quad= \prod_{k=1}^{n-1} \int_{F^\times} |a_k|^k\omega_k(a_k)\mathsf{v}(a_k)^{m_k}\Phi(a_k)da_k.\end{aligned}$$

whence, we are reduced to the one-dimensional case of integrating characters against Schwartz functions. Now, recalling that π is unitary, one has $|a_k|^k\omega_k(a_k) = |a_k|^{r_k}u_k(a_k)$ for some $r_k > 0$ and a u_k unitary character, due to [Ber84, Section 7.3]. The convergence of the last integral is classic and we end this proof by recalling its proof. By definition of a Schwartz funciton, the convergence is reduced to that of integrals of the form $\int_{\mathfrak{p}^l} |x|^r\mathsf{v}(x)^m dx$ for $l \in \mathbb{Z}$, $r > 0$ and $m \geq 0$, where we recall that dx is a Haar measure on F^*. This integral is just up to a positive multiple the series $\sum_{j\geq l} mjq^{-jr}$, which converges as $r > 0$. □

3. Non-vanishing of $\lambda(W^\circ)$

3.1. *Preparatory results.* Let π be an irreducible admissible unitary ψ-generic representation of $G_{2n} = \mathrm{GL}_{2n}(F)$, which admits a $(\mathbf{1}, \psi)$-Shalika model $\mathcal{S}_\psi(\pi)$. For a such representation, we recall our definition of Θ, cf. (2.1) with λ as defined in (2.2).

Let us also recall that an element $W^\circ \in \mathcal{W}_\psi(\pi)$ is a *Whittaker newvector*, if it is invariant under the group $K_{2n}(m)$ as in [Jac-PS-Sha81, Theorem 5.1.(ii)], i.e., if it is invariant under the subgroup of matrices of $\mathrm{GL}_{2n}(\mathcal{O})$, whose last row is congruent to $(0, 0, ..., 0, 1)$ modulo $\mathfrak{p}^m$, where m is the conductor of π. If π is unramified, i.e., if $m = 0$, then we make the convention that $K_{2n}(0) = \mathrm{GL}_{2n}(\mathcal{O})$.

We fix the following, uniquely defined choice of a Whittaker newvector: We let W°_π be defined by $W^\circ_\pi(id) = 1$. We refer to [Jac-PS-Sha81, Theorem 5.1.(ii)] (as accompanied by Jacquet's explanations in [Jac12]) for the uniqueness of Whittaker newvectors up to scalars and to the main result of [Mat13] or, independently, [Miy14, Corollary 4.4] for the non-vanishing of non-zero newvectors at $g = id$.

In what follows, we will closely follow [Ana-Mat17], where the analog computation is performed for local Flicker periods, but the computation below is more involved.

To start, we recall a version of [Mat13, Theorem 3.1] for ramified generic representations:

Theorem 3.1. *Suppose that π is a ψ-generic and ramified representation of G_{2n}. Then, there is an integer r, $0 \leq r \leq 2n-1$ and an unramified standard module π_u of G_r, such that the Whittaker newvector $W^\circ_{\pi_u} \in \mathcal{W}_\psi(\pi_u)$,*

normalized by $W^\circ_{\pi_u}(id) = 1$, *satisfies*

$$W^\circ_\pi(\mu_{2n}(a_1,\dots,a_{2n-1},1))$$
$$= W^\circ_{\pi_u}(\mu_r(a_1,\dots,a_r))\ |\det(\mu_r(a_1,\dots,a_r))|^{(2n-r)/2}\mathbf{1}_{\mathcal{O}}(a_r)\prod_{j=r+1}^{2n-1}\mathbf{1}_{\mathcal{O}^\times}(a_j).$$

Now, set $w_{2n+1} = \mathrm{diag}(w_{2n}, 1) \in G_{2n+1}$ and let

$$\mathcal{P}_m(\mathcal{O}) := \left\{ p = \begin{pmatrix} g_{m-1} & 0 \\ 0 & 1 \end{pmatrix} \begin{pmatrix} id_{m-1} & x \\ 0 & 1 \end{pmatrix} \;\middle|\; \begin{array}{l} g_{m-1} \in \mathrm{GL}_m(\mathcal{O}) \\ x \in \mathcal{O}^{m-1} \end{array} \right\}.$$

The integrals $\mathfrak{J}_k$, cf. (2.3), and their analogues

$$\mathfrak{J}'_k(W,a) :=$$
$$\int_{\mathrm{N}_k\backslash\mathrm{M}_k} W\left(w_{2n+1} \begin{pmatrix} id_k & 0 & X & 0 & 0 \\ & id_{n-k} & 0 & 0 & 0 \\ & & id_k & 0 & 0 \\ & & & id_{n-k} & 0 \\ & & & & 1 \end{pmatrix} \begin{pmatrix} a & & \\ & a & \\ & & 1 \end{pmatrix} \right) \psi^{-1}(Tr(X))dX$$

for $a \in A_n$ will naturally appear in our computation. We record the following useful relations, satisfied by them, as a lemma.

LEMMA 3.2. *Let* π *be a* ψ*-generic representation of* G_m *and let* $W \in \mathcal{W}_\psi(\pi)$, *which is fixed by* $\mathcal{P}_m(\mathcal{O})$. *If* $m = 2n$ *is even, then*

$$\begin{aligned} \mathfrak{J}_n(W,\mu_n(a)) &= \prod_{k=1}^{n-1}|a_k|^{-k(n-k)} W\left(w_{2n} \begin{pmatrix} \mu_n(a) & \\ & \mu_n(a) \end{pmatrix} \right) \\ &= \prod_{k=1}^{n}|a_k|^{-k(n-k)} W\left(w_{2n} \begin{pmatrix} \mu_n(a) & \\ & \mu_n(a) \end{pmatrix} \right). \end{aligned}$$

If $m = 2n+1$ *is odd, then*

$$\begin{aligned} \mathfrak{J}'_n(W,\mu_n(a)) &= \prod_{k=1}^{n-1}|a_k|^{-k(n-k)} W\left(w_{2n+1} \begin{pmatrix} \mu_n(a) & & \\ & \mu_n(a) & \\ & & 1 \end{pmatrix} \right) \\ &= \prod_{k=1}^{n}|a_k|^{-k(n-k)} W\left(w_{2n+1} \begin{pmatrix} \mu_n(a) & & \\ & \mu_n(a) & \\ & & 1 \end{pmatrix} \right). \end{aligned}$$

PROOF. We provide the argument for $\mathfrak{J}_n(W,\mu_n(a))$ (the proof of the second assertion being completely analogous): Right $\mathcal{P}_n(\mathcal{O})$-invariance of W implies that

$$\mathfrak{J}_{k+1}(W,\mu_n(a)) = \prod_{i=1}^{k}|a_i|^{-i}\mathfrak{J}_k(W,\mu_n(a)).$$

as it follows from the end of the proof of [Jo19, Lemma 3.4] (p. 508 of ibid., where we put $\phi = \mathbf{1}_{\mathcal{O}^k}$ there). Note that the proof in question only deals with $\mu_n(a)$ with $a_n = 1$, but it remains valid for any $\mu_n(a)$. From this the claim follows. □

3.2. *The main result.* We are now ready to compute $\lambda(W_\pi^\circ)$ for ramified π. To this end, note that

$$\lambda(W_\pi^\circ) = \int_{U_n\backslash\mathcal{P}_n}\int_{\mathrm{N}_n\backslash\mathrm{M}_n} W_\pi^\circ\left(w_{2n}\begin{pmatrix} id_n & X\\ & id_n\end{pmatrix}\begin{pmatrix} p & \\ & p\end{pmatrix}\right)\psi^{-1}(Tr(X))\ dX\ dp$$
$$= \int_{U_{n-1}\backslash G_{n-1}}\int_{\mathrm{N}_n\backslash\mathrm{M}_n} W_\pi^\circ\left(w_{2n}\begin{pmatrix} id_n & X\\ & id_n\end{pmatrix}\begin{pmatrix} \mathrm{diag}(g,1) & \\ & \mathrm{diag}(g,1)\end{pmatrix}\right)\psi^{-1}(Tr(X))\,dX dg.$$

Using the Iwasawa decomposition and because W_π° is right $P_{2n}(\mathcal{O})$-invariant, this simplifies to

$$\lambda(W_\pi^\circ) = \int_{A_{n-1}} \mathfrak{J}_n(W_\pi^\circ, \mathrm{diag}(a,1))\delta_{B_{n-1}}^{-1}(a)da.$$

Applying first our Lemma 3.2, a simple coordinate change and finally (2.4), the latter integral becomes

$$\int_{A_{n-1}} W_\pi^\circ\left(w_{2n}\begin{pmatrix}\mathrm{diag}(\mu_{n-1}(a),1) & \\ & \mathrm{diag}(\mu_{n-1}(a),1)\end{pmatrix}\right)\prod_{k=1}^{n-1}|a_k|^{-k(n-k)}\delta_{B_{n-1}}^{-1}(\mu_{n-1}(a))da$$
$$= \int_{A_{n-1}} W_\pi^\circ\left(w_{2n}\begin{pmatrix}\mathrm{diag}(\mu_{n-1}(a),1) & \\ & \mathrm{diag}(\mu_{n-1}(a),1)\end{pmatrix}w_{2n}^{-1}\right)\prod_{k=1}^{n-1}|a_k|^{-k(n-k)}\delta_{B_{n-1}}^{-1}(\mu_{n-1}(a))da$$
$$= \int_{A_{n-1}} W_\pi^\circ(\mu_{2n}(1,a_1,\dots,1,a_{n-1},1,1)\prod_{k=1}^{n-1}|a_k|^{-k(n-k)}\delta_{B_{n-1}}^{-1}(\mu_{n-1}(a))da.$$

We will now use Theorem 3.1, distinguishing two cases: First, suppose that $r = 2r'$ is even. Then we get

$$\lambda(W_\pi^\circ) = \int_{A_{r'}} W_{\pi_u}^\circ(\mu_r(1,a_1,\dots,1,a_{r'}))\mathbf{1}_{\mathcal{O}}(a_{r'})|\det(\mu_r(1,a_1,\dots,1,a_{r'}))|^{(n-r')}$$
$$\times \prod_{k=1}^{r'} |a_k|^{-k(n-k)} \delta_{B_{n-1}}^{-1}(\mathrm{diag}(\mu_{r'}(a), id_{n-1-r'}))da$$
$$= \int_{A_{r'}} W_{\pi_u}^\circ(\mu_r(1,a_1,\dots,1,a_{r'}))\mathbf{1}_{\mathcal{O}}(a_{r'})|\det(\mu_{r'}(a_1,\dots,a_{r'}))|^{2(n-r')}$$
$$\times \prod_{k=1}^{r'} |a_k|^{-k(n-k)} \delta_{B_{n-1}}^{-1}(\mathrm{diag}(\mu_{r'}(a), id_{n-1-r'}))da$$
$$= \int_{A_{r'}} \prod_{k=1}^{r'} |a_k|^{-k(n-k)} W_{\pi_u}^\circ(\mu_{r'}(1,a_1,\dots,1,a_{r'}))\mathbf{1}_{\mathcal{O}}(a_{r'})\delta_{B_{r'}}^{-1}(\mu_{r'}(a))|\det(\mu_{r'}(a))|^{n-r'+1}da$$
$$= \int_{A_{r'}} \prod_{k=1}^{r'} |a_k|^{-k(n-k)} W_{\pi_u}^\circ\left(w_{2r'}\begin{pmatrix}\mu_{r'}(a) & \\ & \mu_{r'}(a)\end{pmatrix}\right)\mathbf{1}_{\mathcal{O}}(a_{r'})\delta_{B_{r'}}^{-1}(\mu_{r'}(a))|\det(\mu_{r'}(a))|^{n-r'+1}da$$
$$= \int_{A_{r'}} \prod_{k=1}^{r'} |a_k|^{k^2} W_{\pi_u}^\circ\left(w_{2r'}\begin{pmatrix}\mu_{r'}(a) & \\ & \mu_{r'}(a)\end{pmatrix}\right)\mathbf{1}_{\mathcal{O}}(a_{r'})\delta_{B_{r'}}^{-1}(\mu_{r'}(a))|\det(\mu_{r'}(a))|^{-r'+1}da$$
$$= \int_{A_{r'}} \prod_{k=1}^{r'} |a_k|^{-k(r'-k)} W_{\pi_u}^\circ\left(w_{2r'}\begin{pmatrix}\mu_{r'}(a) & \\ & \mu_{r'}(a)\end{pmatrix}\right)\mathbf{1}_{\mathcal{O}}(a_{r'})\delta_{B_{r'}}^{-1}(\mu_{r'}(a))|\det(\mu_{r'}(a))|da$$
$$= \int_{A_{r'-1}} \prod_{k=1}^{r'-1} |a_k|^{-k(r'-k)} W_{\pi_u}^\circ\left(w_{2r'}\begin{pmatrix}\mathrm{diag}(\mu_{r'-1}(a),1) & \\ & \mathrm{diag}(\mu_{r'-1}(a),1)\end{pmatrix}\right)$$
$$\times \delta_{B_{r'}}^{-1}(\mathrm{diag}(\mu_{r'-1}(a),1))|\det(\mu_{r'-1}(a))|da \int_{F^\times} \omega_{\pi_u}(a_{r'})\mathbf{1}_{\mathcal{O}}(a_{r'})|a_{r'}|^{r'}da_{r'}$$

which, according to Lemma 3.2 again, becomes

$$= \int_{A_{r'-1}} \mathfrak{J}_{r'}(W_{\pi_u}^\circ, \mathrm{diag}(\mu_{r'-1}(a),1))\delta_{B_{r'}}^{-1}(\mu_{r'-1}(a))|\det(\mu_{r'-1}(a))|da$$
$$\times \int_{F^\times} \omega_{\pi_u}(a_{r'})\mathbf{1}_{\mathcal{O}}(a_{r'})|a_{r'}|^{r'}da_{r'}.$$

Now, set $e_{r'} := (0,\dots,0,1)$ (a $1\times r'$ unit-vector) and denote by $J(s,W,\Phi)$ the Jacquet-Shalika integral

$$J(s,W,\Phi) := \int_{U_{r'}\backslash G_{r'}} \int_{\mathrm{N}_{r'}\backslash \mathrm{M}_{r'}} W\left(w_{2r'}\begin{pmatrix} id_{r'} & X \\ & id_{r'}\end{pmatrix}\begin{pmatrix} g & \\ & g\end{pmatrix}\right)$$
$$\times \psi^{-1}(\mathrm{Tr}(X))\Phi(e_{r'}g)|\det(g)|^s dXdg.$$

Once more by the Iwasawa decomposition we get that $\lambda(W_\pi^\circ) = J(1, W_{\pi_u}^\circ, \mathbf{1}_{\mathcal{O}^{r'}})$, whence, applying the unramified computation of the exterior square L-function from [Jac-Sha90, Section 7.2], we finally obtain

$$\lambda(W_\pi^\circ) = L(1, \pi_u, \Lambda^2) \neq 0.$$

This settles the case when $r = 2r'$ is even.

Now assume $r = 2r' + 1$ is odd. As the variable $b_{2r'+1} = b_{2r'+2}$ of $b = \mu_{2n}(a)$ in the integral must vary in $\mathcal{O}^\times$, whereas $W_{\pi_u}^\circ$ is $\mathrm{GL}_r(\mathcal{O})$-invariant, we obtain:

$$\lambda(W_\pi^\circ) = \int_{A_{r'}} W_{\pi_u}^\circ(\mu_r(1, a_1, \dots, 1, a_{r'}, 1)| \det(\mu_{r'}(a))|^{2(n-r')-1} \times \prod_{k=1}^{r'} |a_k|^{-k(n-k)} \delta_{B_{n-1}}^{-1}(\mathrm{diag}(\mu_{r'}(a), id_{n-1-r'}))da.$$

Following the steps of the computation in the case, when r was assumed even, we obtain

$$\begin{aligned}
&\lambda(W_\pi^\circ) = \\
&\int_{A_{r'}} \prod_{k=1}^{r'} |a_k|^{k^2} W_{\pi_u}^\circ \left(w_{2r'+1} \begin{pmatrix} \mu_{r'}(a) & & \\ & \mu_{r'}(a) & \\ & & 1 \end{pmatrix} \right) \delta_{B_{r'}}^{-1}(\mu_{r'}(a))| \det(\mu_{r'}(a))|^{-r'} da \\
&= \int_{A_{r'}} \prod_{k=1}^{r'} |a_k|^{-k(r'-k)} W_{\pi_u}^\circ \left(w_{2r'+1} \begin{pmatrix} \mu_{r'}(a) & & \\ & \mu_{r'}(a) & \\ & & 1 \end{pmatrix} \right) \delta_{B_{r'}}^{-1}(\mu_{r'}(a)) da \\
&= \int_{A_{r'}} \mathfrak{J}'_{r'}(W_{\pi_u}^\circ, \mu_{r'}(a)) \delta_{B_{r'}}^{-1}(\mu_{r'}(a)) da
\end{aligned}$$

where the last equality follows from Lemma 3.2. Denoting by $J(s, W)$ the Jacquet-Shalika integral

$$J(s, W) := \int_{U_{r'} \backslash G_{r'}} \int_{\mathrm{N}_{r'} \backslash \mathrm{M}_{r'}} W \left(w_{2r'+1} \begin{pmatrix} id_{r'} & X & \\ & id_{r'} & \\ & & 1 \end{pmatrix} \begin{pmatrix} g & & \\ & g & \\ & & 1 \end{pmatrix} \right) \psi^{-1}(Tr(X))| \det(g)|^{s-1} dg,$$

we obtain, thanks to the Iwasawa decomposition, $\lambda(W_\pi^\circ) = J(1, W_{\pi_u}^\circ)$, and so, applying the unramified computation of [Jac-Sha90, Section 9.4], finally,

$$\lambda(W_\pi^\circ) = L(1, \pi_u, \Lambda^2) \neq 0.$$

As a next step, it is important to observe that, when π is unramified, the above non-vanishing result is also true.

Indeed, the corresponding computations, which lead to it, are much simpler, when π is unramified, and the L-value slightly different: We refer to [Jo23, Theorem 1.2, (ii), second case] for a precise statement and a proof. In fact, inspired by [Ana-Mat17] and a previous version of the present paper,

Jo computed in [Jo23] instances of such local periods evaluated at Whittaker newvectors in the following popular cases: Rankin-Selberg, Asai, Jacquet-Shalika and Bump-Friedberg exterior square, as well as Bump-Ginzburg symmetric square.

Now, summarizing all of our computations, together with the unramified case, we obtain the main result of our paper:

THEOREM 3.3 (Non-vanishing of Shalika newvectors). *Let π be a irreducible admissible unitary ψ-generic representation of $G_{2n} = \mathrm{GL}_{2n}(F)$, which admits a $(\mathbf{1}, \psi)$-Shalika model $\mathcal{S}_\psi(\pi)$. Let $\Theta : \mathcal{W}_\psi(\pi) \to \mathcal{S}_\psi(\pi)$ be the intertwining operator given by*

$$\Theta(W)(g) = \int_{U_n \backslash \mathcal{P}_n} \int_{\mathrm{N}_n \backslash \mathrm{M}_n} W\left(w_{2n} \begin{pmatrix} id_n & X \\ & id_n \end{pmatrix} \begin{pmatrix} p & 0 \\ 0 & p \end{pmatrix} g\right) \psi^{-1}(Tr(X))\, dX\, dp$$

and let $S^\circ_\pi := \Theta(W^\circ_\pi)$, where W°_π is the unique Whittaker newvector in $\mathcal{W}_\psi(\pi)$, satisfying $W^\circ_\pi(id) = 1$. Then

$$S^\circ_\pi(id) \neq 0.$$

As a consequence, any (non-zero) Shalika newvector in $\mathcal{S}_\psi(\pi)$, i.e., any (non-zero) element of $\mathcal{S}_\psi(\pi)$, which is invariant under $K_{2n}(m)$, does not vanish at $g = id$.

4. Twisting characters

We will now consider the case of more general twisting characters η in our Shalika model $\mathcal{S}^\eta_\psi(\pi)$.

4.1. First, assume that η, as defined in §1.1, is unitary and unramified. If η has these two properties, then, as a character of $\mathcal{S}_{2n}$ it extends to G_{2n}. We shall denote this new character by the same letter.

Let π be a ramified irreducible admissible unitary ψ-generic representation of G_{2n}. If π has a (η, ψ)-Shalika model $\mathcal{S}^\eta_\psi(\pi)$, then $\eta^{-1}\pi$ is a unitary representation, which has a $(\mathbf{1}, \psi)$-Shalika model $\mathcal{S}_\psi(\pi)$ and one is in the situation considered above. The vector $\eta^{-1} \cdot W^\circ_\pi$ is then the unique newvector in $\mathcal{W}_\psi(\eta^{-1}\pi)$, which is 1 at the identity and so $S^\circ_{\eta^{-1}\pi} := \Theta(\eta^{-1} \cdot W^\circ_\pi)$ comes under the purview of Theorem 3.3: Observing that $(\eta^{-1}\pi)_u = \eta^{-1}\pi_u$, since η is unramified, we get

$$S^\circ_{\eta^{-1}\pi}(id) = L(1, \eta^{-1}\pi_u, \Lambda^2) = L(1, \pi_u, \Lambda^2 \otimes \eta) \neq 0.$$

The same argument applies to unramified generic representations, yielding the formula

$$S^\circ_{\eta^{-1}\pi}(id) = \frac{L(1, \pi, \Lambda^2 \otimes \eta)}{L(2n, \mathbf{1}_{F^*})} \neq 0.$$

However, $\eta \cdot S^\circ_{\eta^{-1}\pi}$ is a non-zero newvector in $\mathcal{S}^\eta_\psi(\pi)$, so these newvectors do not vanish at $g = id$.

4.2. Now, let $\eta = \tilde{\eta}|\cdot|^w$, with $w \in \mathbb{Z}$ and $\tilde{\eta}$ a unitary unramified character. Let π be an irreducible admissible ψ-generic representation of G_{2n}, which has an (η, ψ)-Shalika model $\mathcal{S}^{\eta}_{\psi}(\pi)$. Then, every newvector S in $\mathcal{S}^{\eta}_{\psi}(\pi)$ is of the form $S = |\det(\cdot)|^{w/2} \cdot \tilde{S}$, with $\tilde{S}$ a newvector in $\mathcal{S}^{\tilde{\eta}}_{\psi}(\pi)$. See also [Gro-Rag14], Lemma 5.1.1. As a consequence, every non-zero newvector in $\mathcal{S}^{\eta}_{\psi}(\pi)$ does not vanish at $g = id$.

We summarize the latter observations in the following

COROLLARY 4.1. *Let $\eta = \tilde{\eta}|\cdot|^w$, with $w \in \mathbb{Z}$ and $\tilde{\eta}$ a unitary unramified character. Let π be an irreducible admissible ψ-generic representation of G_{2n}, which has an (η, ψ)-Shalika model $\mathcal{S}^{\eta}_{\psi}(\pi)$. Then, for every non-zero newvector S in $\mathcal{S}^{\eta}_{\psi}(\pi)$,*

$$S(id) \neq 0.$$

REFERENCES

[Ana-Mat17] U. K. Anandavardhanan and N. Matringe, *Test vectors for local periods*, Forum Math. **29** (2017), 1245–1260.

[Ash-Gin94] A. Ash and D. Ginzburg, *p-adic L-functions for* GL(2n), Invent. Math. **116** (1994), 27–73.

[Ber-Zel77] J. N. Bernstein and A. V. Zelevinsky, *Induced representations of reductive p-adic groups. I*, Ann. Sci. École Norm. Sup. (4) **10** (1977), 441–472.

[Ber-Zel76] J. N. Bernstein and A. V. Zelevinsky, *Representations of the group $GL(n, F)$ where F is a non-archimedean local field*, Russian Math. Surveys **31:3** (1976), 1–68.

[Ber84] J. N. Bernstein, *P-invariant distributions on GL(N) and the classification of unitary representations of GL(N) (non-Archimedean case)*, in: Lie group representations, II (College Park, Md., 1982/1983), Springer-Verlag, Berlin, 1984, pp. 50–102.

[Che-Sun20] F. Chen and B. Sun, *Uniqueness of twisted linear periods and twisted Shalika periods*, Sci. China Math. **63** (2020), 1–22.

[Gro-Rag14] H. Grobner and A. Raghuram, *On the arithmetic of Shalika models and the critical values of L-functions for GL_{2n}* (with an appendix by Wee Teck Gan), Amer. J. Math. **136** (2014), 675–728.

[Jac12] H. Jacquet, *A correction to "Conducteur des représentations du groupe linéair"*, Pacific J. Math. **260** (2012), 515–525.

[Jac-PS-Sha81] H. Jacquet, I. Piatetski-Shapiro and J. Shalika, *Conducteur des représentations du groupe linéaire*, Math. Ann. **256** (1981), 199–214.

[Jac-Ral96] H. Jacquet and S. Rallis, *Uniqueness of linear periods*, Compos. Math. **102** (1996), 65–123.

[Jac-Sha90] H. Jacquet and J. Shalika, *Exterior square L-functions*, in: Automorphic forms, Shimura varieties, and L-functions, Vol. II, Perspect. Math., vol. **11**, eds. L. Clozel and J. S. Milne, (Ann Arbor, MI, 1988) Academic Press, Boston, MA, 1990, pp. 143–226.

[Jo19] Y. Jo, *Factorization of the local exterior square L-function of $GL(m)$*, Manuscripta Math. **162** (2020), 493–536.

[Jo23] Y. Jo, *The local period integrals and essential vectors*, Math. Nachr. **296** (2023), 339–367.

[Mat11] N. Matringe, *Derivatives and asymptotics of Whittaker functions*, Represent. Theory **15** (2011), 646–669.

[Mat13] N. Matringe, *Essential Whittaker functions for GL(n)*, Doc. Math. **18** (2013), 1191–1214.
[Mat14] N. Matringe, *Linear and Shalika local periods for the mirabolic group, and some consequences*, J. Number Theory **138** (2014), 1–19.
[Mat15] N. Matringe, *On the local Bump-Friedberg L-function*, J. Reine Angew. Math. **709** (2015), 119–170.
[Miy14] M. Miyauchi, *Whittaker functions associated to newforms for GL(n) over p-adic fields*, J. Math. Soc. Japan **66** (2014), 17–24.

O neiščezavanju Shalika novih vektora na jedničnoj matrici

Harald Grobner i Nadir Matringe

Sažetak. Neka je π ireducibilna dopustiva unitarna ψ-generička reprezentacija nearhimedske opće linearne grupe $\mathrm{GL}_{2n}(F)$, koja dopušta (η,ψ)-Shalika model $\mathcal{S}^{\eta}_{\psi}(\pi)$. U ovom radu pokazujemo neiščezavanje svih ne-nul Shalika novih vektora $S^{\circ} \in \mathcal{S}^{\eta}_{\psi}(\pi)$ na jediničnoj matrici $g = id \in \mathrm{GL}_{2n}(F)$, ako je η nerazgranat. Ovo nadopunjuje analogni rezultat za Whittakerove nove vektore, koji se mogu očitati iz formula koje su nezavisno uspostavili Miyauchi u [Miy14] i drugoimenovani autor u [Mat13].

Harald Grobner
Faculty of Mathematics, University of Vienna
Oskar-Morgenstern-Platz 1, A-1090 Vienna, Austria
E-mail: harald.grobner@univie.ac.at

Nadir Matringe
IMJ-PRG, Université Paris-Cité
8 Pl. Aurélie Nemours, 75013 Paris, France
E-mail: nadir.matringe@imj-prg.fr

Received: 2.5.2023.
Revised: 11.8.2023.
Accepted: 19.9.2023.

RAD HAZU. MATEMATIČKE ZNANOSTI
Vol. 28 = 558 (2024): 107-129
DOI: https://doi.org/10.21857/m16wjcwv29

JIANG'S CONJECTURE AND FIBERS OF THE BARBASCH-VOGAN DUALITY

Baiying Liu, Chi-Heng Lo and Freydoon Shahidi

To Marko Tadić on the occasion of his 70th Birthday

Abstract. The well-known Shahidi's conjecture says that tempered L-packets have generic members. As a natural generalization of Shahidi's conjecture to non-tempered local Arthur packets, Jiang's conjecture characterizes the relation between the structure of local Arthur parameters and the upper bound of wavefront sets of representations in local Arthur packets. One of the main ingredients in Jiang's conjecture is the Barbasch-Vogan duality. In this paper, first we briefly survey the recent progress on Jiang's conjecture, then towards the general case of Jiang's conjecture, we explicitly describe the fibers of the Barbasch-Vogan duality for classical groups.

1. Introduction

Let F be a non-Archimedean local field. Let $\mathrm{G}_n = \mathrm{Sp}_{2n}, \mathrm{SO}_{2n+1}, \mathrm{SO}_{2n}^{\alpha}$ be quasi-split classical groups, where α is a square class in F, and let $G_n = \mathrm{G}_n(F)$. Here, we identify a square class with the corresponding quadratic character of the Weil group W_F via the local class field theory. Their Langlands dual groups are

$$\widehat{\mathrm{G}}_n(\mathbb{C}) = \mathrm{SO}_{2n+1}(\mathbb{C}), \mathrm{Sp}_{2n}(\mathbb{C}), \mathrm{SO}_{2n}(\mathbb{C}).$$

Let ${}^L\mathrm{G}_n$ be the L-group of G_n,

$${}^L\mathrm{G}_n = \begin{cases} \widehat{\mathrm{G}}_n(\mathbb{C}) & \text{when } \mathrm{G}_n = \mathrm{Sp}_{2n}, \mathrm{SO}_{2n+1}, \\ \mathrm{SO}_{2n}(\mathbb{C}) \rtimes W_F & \text{when } \mathrm{G}_n = \mathrm{SO}_{2n}^{\alpha}. \end{cases}$$

2020 *Mathematics Subject Classification.* Primary 11F70, 22E50; Secondary 11F85.
Key words and phrases. Local Arthur packets, Local Arthur parameters, Shahidi's conjecture, Enhanced Shahidi's conjecture, Jiang's conjecture.
The research of the first named author is partially supported by the NSF Grant DMS-1848058. The research of the third named author is partially supported by the NSF Grant DMS-2135021.

In his fundamental work [2], Arthur introduced the local Arthur packets which are finite sets of representations of G_n, parameterized by local Arthur parameters. Local Arthur parameters are defined as a direct sum of irreducible representations

$$\psi : W_F \times \mathrm{SL}_2(\mathbb{C}) \times \mathrm{SL}_2(\mathbb{C}) \to {}^L\mathrm{G}_n$$

$$\psi = \bigoplus_{i=1}^{r} \phi_i \otimes S_{m_i} \otimes S_{n_i}, \tag{1.1}$$

satisfying the following conditions:

(1) $\phi_i(W_F)$ is bounded and consists of semi-simple elements, and $\dim(\phi_i) = k_i$;

(2) the restrictions of ψ to the two copies of $\mathrm{SL}_2(\mathbb{C})$ are analytic, S_k is the k-dimensional irreducible representation of $\mathrm{SL}_2(\mathbb{C})$, and

$$\sum_{i=1}^{r} k_i m_i n_i = N = N_n := \begin{cases} 2n+1 & \text{when } \mathrm{G}_n = \mathrm{Sp}_{2n}, \\ 2n & \text{when } \mathrm{G}_n = \mathrm{SO}_{2n+1}, \mathrm{SO}_{2n}^{\alpha}. \end{cases}$$

Assuming the Ramanujan conjecture, Arthur ([2]) showed that these local Arthur packets characterize the local components of square-integrable automorphic representations. For $1 \le i \le r$, let $a_i = k_i m_i$, $b_i = n_i$. Let

$$\underline{p}(\psi) = [b_1^{a_1}, b_2^{a_2}, \dots, b_r^{a_r}]$$

be a partition of N, where without loss of generality, we assume that $b_1 \ge b_2 \ge \cdots \ge b_r$. A local Arthur parameter ψ is called tempered or generic if for all $1 \le i \le r$, $b_i = 1$. Given a local Arthur parameter ψ as in (1.1), the local Arthur packet is denoted by $\widetilde{\Pi}_\psi$. An irreducible admissible representation π of G_n is called of Arthur type if it lies in a local Arthur packet.

Given an irreducible representation π of G_n, one important invariant is a set $\mathfrak{n}(\pi)$ which is defined to be all the F-rational nilpotent orbits $\mathcal{O}$ in the Lie algebra $\mathfrak{g}_n$ of G_n such that the coefficient $c_{\mathcal{O}}(\pi)$ in the Harish-Chandra-Howe local expansion of the character $\Theta(\pi)$ of π is nonzero (see [9] and [21]). Let $\mathfrak{n}^m(\pi)$ be the subset of $\mathfrak{n}(\pi)$ consisting of maximal nilpotent orbits, under the dominant order of nilpotent orbits. Let $\overline{\mathfrak{n}}(\pi)$ and $\overline{\mathfrak{n}}^m(\pi)$ be the sets of corresponding nilpotent orbits over $\overline{F}$. Then $\overline{\mathfrak{n}}^m(\pi)$ is called the wavefront set of π. Note that nilpotent orbits $\mathcal{O}$ of G_n are parametrized by data $(\underline{p}, \underline{q})$, where $\underline{p}$ is partition of $2n$ (or $2n+1$ when $\mathrm{G}_n = \mathrm{SO}_{2n+1}$) and $\underline{q}$ is certain non-degenerate quadratic form ([26, Section I.6]). Let $\mathfrak{p}(\pi)$ be the set of partitions corresponding to $\mathfrak{n}(\pi)$. Under the dominant order of partitions, let $\mathfrak{p}^m(\pi)$ be the maximal elements in $\mathfrak{p}(\pi)$. Then $\mathfrak{p}^m(\pi)$ can be identified exactly with the set $\overline{\mathfrak{n}}^m(\pi)$, except for very even orbits of even special orthogonal groups in which case it could be one-to-two (for those very even partitions, see §2.1), is also called the wavefront set of π.

For tempered L-packets, Shahidi has the following conjecture in general.

CONJECTURE 1.1 (Shahidi's conjecture). *For any quasi-split reductive group G, tempered L-packets have generic members.*

Conjecture 1.1 can be enhanced as follows.

CONJECTURE 1.2 (Enhanced Shahidi's conjecture). *For any quasi-split reductive group G, local Arthur packets are tempered if and only if they have generic members.*

Jiang's conjecture is a natural generalization of Shahidi's conjectures above from tempered local Arthur packets to non-tempered ones, on the characterization of the set $\mathfrak{p}^m(\pi)$ for π in local Arthur packets. Note that for a generic representation π, the set $\mathfrak{p}^m(\pi)$ contains only regular nilpotent orbits. The global version of this conjecture can be found in [14, Conjecture 4.2].

One of the main ingredients in Jiang's conjecture is the Barbasch-Vogan duality map d_{BV}, from nilpotent orbits in $\widehat{\mathrm{G}}(\mathbb{C})$ to those in $\mathrm{G}(\mathbb{C})$, see Definition 2.5 for details in the cases of $\mathrm{G} = \mathrm{G}_n$. Note that nilpotent orbits in $\mathrm{G}(\mathbb{C})$ are naturally identified with those in $\mathrm{G}(\overline{F})$ (see [3, 20, 23]).

CONJECTURE 1.3 (Jiang's conjecture). *Given any local Arthur parameter ψ of G_n as in* (1.1)*, the followings hold.*

1. *For any $\pi \in \widetilde{\Pi}_\psi$, any partition $\underline{p}$ in $\mathfrak{p}^m(\pi)$ has the property that*
$$\underline{p} \leq d_{BV}(\underline{p}(\psi)).$$
2. *There exists $\pi \in \widetilde{\Pi}_\psi$, such that $d_{BV}(\underline{p}(\psi)) \in \mathfrak{p}^m(\pi)$.*

There has been many recent progress towards Conjecture 1.3. In [19], the first named author and the third named author studied Jiang's conjecture adapting the matching method of endoscopic transfer in [22] and the work of [12, 13, 15, 17] to construct a particular element in each local Arthur packet. We obtain results assuming a conjecture as follows.

Let θ be the standard outer automorphism of $\mathrm{G}(N) = \mathrm{GL}(N)$: $g \mapsto {}^t g^{-1}$ and let $\tilde{\theta}(N) = Int(\tilde{J}) \circ \theta : g \mapsto \tilde{J}\theta(g)\tilde{J}^{-1}$, where
$$\tilde{J} = \tilde{J}(N) = \begin{pmatrix} 0 & & & 1 \\ & & -1 & \\ & \cdots & & \\ (-1)^{N-1} & & & 0 \end{pmatrix}.$$
Let π_ψ be the representation of $\mathrm{GL}_N(F)$ corresponding to ϕ_ψ via local Langlands correspondence, which is unitary and self-dual, and let $\widetilde{\pi}_\psi$ be its canonical extension to the bitorsor $\widetilde{\mathrm{GL}}_N(F) = \mathrm{GL}_N(F) \rtimes \widetilde{\theta}(N)$.

Taking the character expansion for the representation $\widetilde{\pi}_\psi$ of the bitorsor $\widetilde{\mathrm{GL}}_N(F)$ at
$$\theta_{\widehat{\mathrm{G}}_n} = s_{\widehat{\mathrm{G}}_n} \rtimes \widetilde{\theta}(N) \in \widetilde{\mathrm{GL}}_N(F), \tag{1.2}$$

(see [4], also see [16, Theorem 3.2] and [25, Theorems 4.20, 4.23]), where

$$s_{\widehat{\mathrm{G}}_n} = \begin{cases} I_N, & \text{when } \mathrm{G}_n = \mathrm{SO}_{2n+1}, \\ \begin{pmatrix} I_n & & \\ & 1 & \\ & & -I_n \end{pmatrix}, & \text{when } \mathrm{G}_n = \mathrm{Sp}_{2n}, \\ \begin{pmatrix} I_n & \\ & -I_n \end{pmatrix}, & \text{when } \mathrm{G}_n = \mathrm{SO}^{\alpha}_{2n}, \end{cases}$$

we can define the sets $\mathfrak{n}^m(\widetilde{\pi}_\psi)$ and $\mathfrak{p}^m(\widetilde{\pi}_\psi)$ similarly. Note that when $\mathrm{G}_n = \mathrm{SO}_{2n+1}, \mathrm{SO}^{\alpha}_{2n}$, the connected component of the stabilizer of $\theta_{\widehat{\mathrm{G}}_n}$ in $\widetilde{\mathrm{GL}}_N(F)$ is $\widehat{\mathrm{G}}_n(F)$ and $\mathfrak{n}^m(\widetilde{\pi}_\psi)$ consists of F-rational nilpotent orbits in the Lie algebra of $\widehat{\mathrm{G}}_n(F)$. When $\mathrm{G}_n = \mathrm{Sp}_{2n}$, the connected component of the stabilizer of $\theta_{\widehat{\mathrm{G}}_n}$ in $\widetilde{\mathrm{GL}}_{2n+1}(F)$ is $\mathrm{G}_n(F) \times \mathrm{SO}_1$ and $\mathfrak{n}^m(\widetilde{\pi}_\psi)$ consists of F-rational nilpotent orbits in the Lie algebra of $\mathrm{G}_n(F)$. Then we have the following conjecture regarding the set $\mathfrak{p}^m(\widetilde{\pi}_\psi)$.

Conjecture 1.4. *For any $\underline{p} \in \mathfrak{p}^m(\widetilde{\pi}_\psi)$,*

$$\underline{p} \leq \begin{cases} \{(\underline{p}(\psi)^*)_{\widehat{\mathrm{G}}_n}\}, & \text{when } \mathrm{G}_n = \mathrm{SO}_{2n+1}, \mathrm{SO}^{\alpha}_{2n}, \\ \{((\underline{p}(\psi)^*)^-)_{\mathrm{G}_n}\}, & \text{when } \mathrm{G}_n = \mathrm{Sp}_{2n}, \end{cases}$$

where $(\underline{p}(\psi)^*)_{\widehat{\mathrm{G}}_n}$ is the $\widehat{\mathrm{G}}_n$-collapse of the partition $\underline{p}(\psi)^*$ (transpose of $\underline{p}(\psi)$), which is the largest $\widehat{\mathrm{G}}_n$-partition smaller than or equal to $\underline{p}(\psi)^*$, $(\underline{p}(\psi)^*)^-$ is decreasing the smallest part of $\underline{p}(\psi)^*$ by 1 and $((\underline{p}(\psi)^*)^-)_{\mathrm{G}_n}$ is the G_n-collapse of $(\underline{p}(\psi)^*)^-$.

We also believe that the following stronger conjecture holds.

Conjecture 1.5.

$$\mathfrak{p}^m(\widetilde{\pi}_\psi) = \begin{cases} \{(\underline{p}(\psi)^*)_{\widehat{\mathrm{G}}_n}\}, & \text{when } \mathrm{G}_n = \mathrm{SO}_{2n+1}, \mathrm{SO}^{\alpha}_{2n}, \\ \{((\underline{p}(\psi)^*)^-)_{\mathrm{G}_n}\}, & \text{when } \mathrm{G}_n = \mathrm{Sp}_{2n}\,. \end{cases}$$

Conjectures 1.4 and 1.5 are inspired by the result of Konno in [16, Theorem 4.1], where certain cases of these conjectures are confirmed. For more comments on Conjectures 1.4 and 1.5, please see [19, Remark 1.4]. The main results in [19] towards Jiang's conjecture 1.3 can be summarized in the following theorem.

Theorem 1.6 ([19, Theorem 1.9]). *Let ψ be a local Arthur parameter as in* (1.1)*, with $\underline{p}(\psi) = [b_1^{a_1}, b_2^{a_2}, \dots, b_r^{a_r}]$ and $b_1 \geq b_2 \geq \cdots \geq b_r$. Assume that Conjecture 1.4 is true. Then we have the followings.*

1. *Conjecture 1.3 Part (1) is partially valid, i.e., for any partition $\underline{p} > d_{BV}(\underline{p}(\psi))$ and any $\pi \in \widetilde{\Pi}_\psi$, $\underline{p} \notin \mathfrak{p}^m(\pi)$.*

2. *Conjecture 1.2 is true.*
3. *Let*

$$\underline{p}_1 = \left[\lfloor \frac{b_1}{2} \rfloor^{a_1}, \lfloor \frac{b_2}{2} \rfloor^{a_2}, \dots, \lfloor \frac{b_r}{2} \rfloor^{a_r} \right]^*,$$

and $n_0 = \lfloor \frac{\sum_{b_i \text{ odd}} a_i}{2} \rfloor$. *Then Conjecture 1.3 Part (2) holds for the following cases.*

(a) *When* $\mathrm{G}_n = \mathrm{Sp}_{2n}$, *and*

$$([\underline{p}_1, \underline{p}_1, (2n_0)]^*)_{\mathrm{Sp}_{2n}} = ([b_1^{a_1}, \dots, b_r^{a_r}]^-)_{\mathrm{Sp}_{2n}}. \tag{1.3}$$

In particular, if

(i) $a_r = b_r = 1$ *and* b_i *are all even for* $1 \le i \le r-1$,
(ii) *or,* b_i *are all odd,*

then (1.3) *holds and thus Conjecture 1.3 Part (2) is valid.*

(b) *When* $\mathrm{G}_n = \mathrm{SO}_{2n+1}$, *and*

$$([\underline{p}_1, \underline{p}_1, (2n_0+1)]^*)_{\mathrm{SO}_{2n+1}} = ([b_1^{a_1}, \dots, b_r^{a_r}]^+)_{\mathrm{SO}_{2n+1}}. \tag{1.4}$$

In particular, if

(i) b_1 *is even and* $a_1 = 1$, *and* b_i *are all odd for* $2 \le i \le r$,
(ii) *or,* b_i *are all even,*

then (1.4) *holds and thus Conjecture 1.3 Part (2) is valid.*

(c) *When* $\mathrm{G}_n = \mathrm{SO}_{2n}^{\alpha}$, *and*

$$[\underline{p}_1, \underline{p}_1, (2n_0-1), 1]^{\mathrm{SO}_{2n}} = ([b_1^{a_1}, \dots, b_r^{a_r}]^*)_{\mathrm{SO}_{2n}}. \tag{1.5}$$

If all b_i *are of the same parity, then* (1.5) *holds and thus Conjecture 1.3 Part (2) is valid. Here given any partition* $\underline{q}$ *of* SO_{2n}, $\underline{q}^{\mathrm{SO}_{2n}}$ *is the* SO_{2n}*-expansion of* $\underline{q}$, *which is the smallest special* SO_{2n}*-partition bigger than or equal to* $\underline{q}$.

Conjecture 1.4 plays an important role in all parts of Theorem 1.6, in the matching process of endoscopic transfer as in [22]. In Conjecture 1.3 Part (1), what is missing is that for any partition $\underline{p}$ which is not related to $d_{BV}(\underline{p}(\psi))$ and any $\pi \in \widetilde{\Pi}_\psi$, $\underline{p} \notin \mathfrak{p}^m(\pi)$. Unfortunately, our current method can not rule out these partitions, due to the expectation that wavefront sets of representations may not be singleton (see the example provided in [24]). For more discussion on Conjectures 1.3, 1.4, and Theorem 1.6, we refer to [19, Remark 1.10] and the discussions afterwards.

As another approach towards Jiang 's conjecture, joint with Hazeltine ([11]), we proved the following very interesting reduction on Part (1) of Conjecture 1.3, by an inductive process on the L-data for the Aubert-Zelevinsky dual of representations in local Arthur packets.

THEOREM 1.7 ([11, Theorem 1.6]). *The following statements are equivalent.*

1. *Part (1) of Conjecture 1.3 holds for any local Arthur parameter.*
2. *Part (1) of Conjecture 1.3 holds for any anti-tempered local Arthur parameter, i.e., the dual of a tempered local Arthur parameter.*

We remark that recent work of Ciubotaru-Mason-Brown-Okada ([6–8]) and Waldspurger ([27]), combining the closure relation result of [10], imply that Jiang's conjecture 1.3 holds for any local Arthur parameter ψ of $\mathrm{Sp}_{2n}(F)$ or split $\mathrm{SO}_{2n+1}(F)$ which is trivial on W_F. For more discussion, see [11].

As we can see above, one of the main ingredients in Jiang's conjecture 1.3 is the Barbasch-Vogan duality. Towards the general case of Jiang's conjecture, in this paper, we explicitly describe the fibers of the Barbasch-Vogan duality for classical groups in §3 as follows.

THEOREM 1.8 (Theorem 3.4). *Let $(X, X') \in \{(B,C),(C,B),(D,D)\}$ and $\underline{\mathfrak{p}}$ be a partition of type X' in the image of the Barbasch-Vogan duality. Write $d_{BV}(\underline{\mathfrak{p}}) =: \underline{p} = [p_1^{m_1}, \dots, p_r^{m_r}]$, and define a subset $I \subseteq \{1, \dots, r\}$ type by type as follows. (We set $p_{r+1} = 0$ and $m_{r+1} = 1$.)*

(i) When $X = B$,

$$I := \left\{ 1 \le i \le r \;\middle|\; \begin{array}{c} p_{i+1}=p_i-2 \text{ or } p_{i+2}=p_i-2, \\ p_i \text{ is odd, and } m_i+\sum_{j=1}^{i-1} m_j p_j \text{ is odd.} \end{array} \right\}.$$

(ii) When $X = C$,

$$I := \left\{ 1 \le i \le r \;\middle|\; \begin{array}{c} p_{i+1}=p_i-2 \text{ or } p_{i+2}=p_i-2, \\ p_i \text{ is even, and } m_i+\sum_{j=1}^{i-1} m_j (p_j+1) \text{ is even.} \end{array} \right\}.$$

(iii) When $X = D$,

$$I := \left\{ 1 \le i \le r \;\middle|\; \begin{array}{c} p_{i+1}=p_i-2 \text{ or } p_{i+2}=p_i-2, \\ p_i \text{ is odd, and } m_i+\sum_{j=1}^{i-1} m_j p_j \text{ is even.} \end{array} \right\}.$$

For any subset $J \subseteq I$, we define $\underline{p}_J$ from $\underline{p}$ by reducing the multiplicity of p_j and $p_j - 2$ by 1 and increasing the multiplicity of $p_j - 1$ by 2 for each $j \in J$.

Then the following map is a bijection of partially ordered sets

$$\begin{aligned} (2^I, \ge) &\longrightarrow (d_{BV}^{-1}(\underline{\mathfrak{p}}), \ge) \\ J &\longmapsto \underline{p}_J, \end{aligned}$$

where $(2^I, \ge)$ is the power set of I with the partial ordering defined by $J_1 \ge J_2$ if $J_1 \subseteq J_2$.

The result in this paper facilitates the understanding of the structure of the local Arthur packets and is expected to play an important role towards the general case of Jiang's conjecture and many other problems related to local Arthur packets. As an example, in [18], the first and second named authors have applied the description of fibers of Barbasch-Vogan duality to prove the weak local Arthur packets conjecture proposed by Ciubotaru-Mason-Brown-Okada ([7, Conjecture 3.1.2]).

The following is the structure of this paper. In §2, we give some preliminaries on partitions and nilpotent orbits of $G_n(\mathbb{C})$ and the Barbasch-Vogan duality. In §3, we describe the fibers of the Barbasch-Vogan duality and prove our main result (Theorem 1.8).

2. Preliminaries

In this section, we give some preliminaries on partitions and nilpotent orbits of $G_n(\mathbb{C})$ and the Barbasch-Vogan duality.

2.1. *Partitions and nilpotent orbits of $G_n(\mathbb{C})$.* In this subsection, we recall the basic notation for partitions and the correspondence between nilpotent orbits of $\mathfrak{g}_n(\mathbb{C})$ and partitions, following [5].

First, we denote the set of partitions of n by $\mathcal{P}(n)$. We express a partition $\underline{p} \in \mathcal{P}(n)$ in one of the following forms:

(i) $\underline{p} = [p_1, \dots, p_N]$, such that p_i's are non-increasing non-negative integers and $\sum_{i=1}^N p_i = n$. We denote the the *length* of $\underline{p}$ by $l(\underline{p}) = |\{1 \leq i \leq N \mid p_i > 0\}|$.

(ii) $\underline{p} = [p_1^{r_1}, \dots, p_N^{r_N}]$, such that p_i's are decreasing non-negatives integers and $\sum_{i=1}^N r_i p_i = n$. We assume $r_i > 0$ unless specified.

Also, we denote $|\underline{p}| = n$ if $\underline{p} \in \mathcal{P}(n)$.

Next, we recall the definitions for partitions of type B, C and D.

Definition 2.1. *For $\epsilon \in \{\pm 1\}$, we define*

$$\mathcal{P}_\epsilon(n) = \{[p_1^{r_1}, \dots, p_N^{r_N}] \in \mathcal{P}(n) \mid r_i \text{ is even for all } p_i \text{ with } (-1)^{p_i} = \epsilon\}.$$

Then we say

1. *$\underline{p} \in \mathcal{P}(n)$ is of type B if n is odd and $\underline{p} \in \mathcal{P}_1(n)$.*
2. *$\underline{p} \in \mathcal{P}(n)$ is of type C if n is even and $\underline{p} \in \mathcal{P}_{-1}(n)$.*
3. *$\underline{p} \in \mathcal{P}(n)$ is of type D if n is even and $\underline{p} \in \mathcal{P}_1(n)$.*

We denote $\mathcal{P}_X(n)$ the set of partitions of n of type X.

Denote the set of nilpotent orbits of $\mathrm{SO}_{2n+1}(\mathbb{C})$, $\mathrm{Sp}_{2n}(\mathbb{C})$ and $\mathrm{SO}_{2n}(\mathbb{C})$ by $\mathcal{N}_B(2n+1)$, $\mathcal{N}_C(2n)$ and $\mathcal{N}_D(2n)$ respectively. Also, we denote

$$\mathcal{N}_B = \bigcup_{n \geq 0} \mathcal{N}_B(2n+1),\ \mathcal{N}_C = \bigcup_{n \geq 0} \mathcal{N}_C(2n),\ \mathcal{N}_D = \bigcup_{n \geq 0} \mathcal{N}_D(2n).$$

For $(X, N) \in \{(B, 2n+1), (C, 2n), (D, 2n)\}$, there is a surjection

$$\begin{aligned} \mathcal{N}_X(N) &\longrightarrow \mathcal{P}_X(N), \\ \mathcal{O} &\longmapsto \underline{p}_{\mathcal{O}}. \end{aligned}$$

The fiber of $\underline{p} = [p_1^{m_1}, \dots, p_r^{m_r}] \in \mathcal{P}_X(N)$ under this map is a singleton, which we denote by $\{\mathcal{O}_{\underline{p}}\}$, except when $\underline{p}$ is "very even"; i.e., $\underline{p}$ is of type D and p_i's

are all even. When $\underline{p}$ is very even, the fiber consists of two nilpotent orbits, which we denote by $\mathcal{O}_{\underline{p}}^{I}$ and $\mathcal{O}_{\underline{p}}^{II}$.

The surjection $\mathcal{O} \mapsto \underline{p}_{\mathcal{O}}$ carries the closure ordering on $\mathcal{N}_X(N)$ to the dominance ordering on $\mathcal{P}_X(N)$ in the sense that $\mathcal{O} > \mathcal{O}'$ if and only if $\underline{p}_{\mathcal{O}} > \underline{p}_{\mathcal{O}'}$. Note that when $\underline{p}$ is very even, $\mathcal{O}_{\underline{p}}^{I}$ and $\mathcal{O}_{\underline{p}}^{II}$ are not comparable.

2.2. *Barbasch-Vogan duality.* In this subsection, following [1, 3, 20, 23], we introduce several operations on the set of partitions, and then use them to describe the definition of the Barbasch-Vogan duality on the level of partitions and nilpotent orbits.

First, we need the following operations to construct or decompose partitions.

DEFINITION 2.2. *Suppose $\underline{p} \in \mathcal{P}(n_1)$ and $\underline{q} \in \mathcal{P}(n_2)$.*

(i) Write $\underline{p} = [p_1^{r_1}, \dots, p_N^{r_N}]$ and $\underline{q} = [p_1^{s_1}, \dots, p_N^{s_N}]$, where we allow $r_i = 0$ or $s_i = 0$. Then we define

$$\underline{p} \sqcup \underline{q} = [p_1^{r_1+s_1}, \dots, p_N^{r_N+s_N}] \in \mathcal{P}(n_1 + n_2).$$

(ii) Write $\underline{p} = [p_1, \dots, p_N]$, we define

$$\underline{p}^{+} = [p_1 + 1, p_2, \dots, p_N] \in \mathcal{P}(n_1 + 1),$$
$$\underline{p}^{-} = [p_1, \dots, p_{N-1}, p_N - 1] \in \mathcal{P}(n_1 - 1).$$

The following notation is useful in the computation.

DEFINITION 2.3. *For $\underline{p} = [p_1, \dots, p_N] \in \mathcal{P}(n)$ and $b \in \mathbb{Z}$, we define*

$$\underline{p}_{>b} = [p_1, \dots, p_i]$$

where $i = \max\{1 \le j \le N \mid p_j > b\}$. We define $\underline{p}_{\bullet b}$ similarly for $\bullet \in \{=, <, \le, \ge\}$ so that $\underline{p} = \underline{p}_{>b} \sqcup \underline{p}_{\le b} = \underline{p}_{>b} \sqcup \underline{p}_{=b} \sqcup \underline{p}_{<b}$, etc.

We recall the definition of transpose (or conjugation) of partitions.

DEFINITION 2.4. *For $\underline{p} = [p_1, \dots, p_N] \in \mathcal{P}(n)$, we define $\underline{p}^{*} = [p_1^{*}, \dots, p_{N'}^{*}] \in \mathcal{P}(n)$ by*

$$p_i^{*} = |\{j \mid p_j \ge i\}|.$$

It is easy to see that for any two partitions $\underline{p}$, $\underline{q}$ of n, $(\underline{p} \sqcup \underline{q})^{*} = \underline{p}^{*} + \underline{q}^{*}$.

Next, we recall the definition of collapse. Let n be a positive integer and let $X = B$ if n is odd and $X \in \{C, D\}$ if n is even. For any $\underline{p} \in \mathcal{P}(n)$, there exists a unique maximal partition $\underline{p}_X \in \mathcal{P}(n)$ of type X such that $\underline{p}_X \le \underline{p}$. We denote $\underline{p}_X$ the *X-collapse* of $\underline{p}$.

The following lemma, which is a special case of [1, Lemma 3.1], gives an inductive way to compute collapse. Note that $\underline{p}_{>x}$ is always superior than $(\underline{p}_{\le x})^{+}$ in the notation there. Following the notation in [1], we often omit

the parentheses between the superscript and subscript. For example, we shall write $\underline{p}_{>x,D}{}^{+}{}_{B}{}^{-*}$ instead of $(((((\underline{p}_{>x})_D)^+)_B)^-)^*$.

LEMMA 2.1. *Let x be a positive integer and $\underline{p}$ be a partition. Then for $X \in \{B, C, D\}$, the X-collapse (if defined) of $\underline{p}$ is given by the following table.*

	$l(\underline{p}_{>x})$ *even*		$l(\underline{p}_{>x})$ *odd*	
	$\lvert\underline{p}_{>x}\rvert$ *even*	$\lvert\underline{p}_{>x}\rvert$ *odd*	$\lvert\underline{p}_{>x}\rvert$ *even*	$\lvert\underline{p}_{>x}\rvert$ *odd*
$\underline{p}_B$:	$\underline{p}_{>x,D} \sqcup \underline{p}_{\leq x,B}$	$\underline{p}_{>x}{}^{-}{}_{D} \sqcup \underline{p}_{\leq x}{}^{+}{}_{B}$	$\underline{p}_{>x}{}^{-}{}_{B} \sqcup \underline{p}_{\leq x}{}^{+}{}_{D}$	$\underline{p}_{>x,B} \sqcup \underline{p}_{\leq x,D}$
$\underline{p}_C$:	$\underline{p}_{>x,C} \sqcup \underline{p}_{\leq x,C}$	$\underline{p}_{>x}{}^{-}{}_{C} \sqcup \underline{p}_{\leq x}{}^{+}{}_{C}$	$\underline{p}_{>x,C} \sqcup \underline{p}_{\leq x,C}$	$\underline{p}_{>x}{}^{-}{}_{C} \sqcup \underline{p}_{\leq x}{}^{+}{}_{C}$
$\underline{p}_D$:	$\underline{p}_{>x,D} \sqcup \underline{p}_{\leq x,D}$	$\underline{p}_{>x}{}^{-}{}_{D} \sqcup \underline{p}_{\leq x}{}^{+}{}_{D}$	$\underline{p}_{>x}{}^{-}{}_{B} \sqcup \underline{p}_{\leq x}{}^{+}{}_{B}$	$\underline{p}_{>x,B} \sqcup \underline{p}_{\leq x,B}$

Finally, we recall the definition of Barbasch-Vogan duality maps for partitions of type X.

DEFINITION 2.5. *(i) For $\underline{p} \in \mathcal{P}_B(2n+1)$, we define $d_{BV}(\underline{p}) := \underline{p}^{-}{}_{C}{}^{*}$, which is in $\mathcal{P}_C(2n)$.*
(ii) For $\underline{p} \in \mathcal{P}_C(2n)$, we define $d_{BV}(\underline{p}) := \underline{p}^{+}{}_{B}{}^{*}$, which is in $\mathcal{P}_B(2n+1)$.
(iii) For $\underline{p} \in \mathcal{P}_D(2n)$, we define $d_{BV}(\underline{p}) := \underline{p}^{*}{}_{D}$, which is in $\mathcal{P}_D(2n)$.

The Barbasch-Vogan duality map can be extended to the level of nilpotent orbits. If $\underline{p} \in \mathcal{P}_D(2n)$ is very even, then define

$$d_{BV}(\mathcal{O}^I_{\underline{p}}) = \begin{cases} \mathcal{O}^I_{\underline{p}} & \text{if } n \text{ is even,} \\ \mathcal{O}^{II}_{\underline{p}} & \text{if } n \text{ is odd.} \end{cases}$$

Otherwise, define $d_{BV}(\mathcal{O}_{\underline{p}}) = \mathcal{O}_{d_{BV}(\underline{p})}$. See [5, Corollary 6.3.5]. Also see Proposition 3.7 (a) below for the well-definedness, i.e., $d_{BV}(\underline{p})$ is very even only if $\underline{p}$ is also very even. A nilpotent orbit or a partition is *special* if it is in the image of the Barbasch-Vogan duality map. Sometimes, to make things more clear, we may use $d_{BV,(X,X')}$ to denote the Barbasch-Vogan duality map sending partitions of type X to partitions of type X'.

3. Fibers of the Barbasch-Vogan duality

Let $(X, X') \in \{(B,C),(C,B),(D,D)\}$. In this section, we study the structure of the sets of partitions

$$d^{-1}_{BV}(\underline{\mathfrak{p}}) := \{\underline{p} \in \mathcal{P}_X \mid d_{BV}(\underline{p}) = \underline{\mathfrak{p}}\},$$

for a special partition $\underline{\mathfrak{p}} \in \mathcal{P}_{X'}$. We give a explicit description of $d^{-1}_{BV}(\underline{\mathfrak{p}})$ in Theorem 3.4 and relate it with

$$d^{-1}_{BV}(\mathcal{O}') := \{\mathcal{O} \in \mathcal{N}_X \mid d_{BV}(\mathcal{O}) = \mathcal{O}'\}$$

for any special $\mathcal{O}' \in \mathcal{N}_{X'}$ in Proposition 3.7.

For convenience, we introduce the following notation. Recall that when we write a partition $\underline{p}$ as $[p_1, \dots, p_r]$, we require that p_i is non-increasing. Set $p_t = 0$ for any $t > r$ throughout this section.

DEFINITION 3.1. *Let n be a positive integer and $\underline{p} = [p_1, \dots, p_r], \underline{q} = [q_1, \dots, q_s]$ be two arbitrary partitions in $\mathcal{P}(n)$.*

1. *If $\underline{p} \neq \underline{q}$, we define $x(\underline{p}, \underline{q})$ to be the unique index such that $p_i = q_i$ for $1 \leq i < x$ and $p_x \neq q_x$. If $\underline{p} = \underline{q}$, then we set $x(\underline{p}, \underline{q}) = l(\underline{p}) + 1$. Occasionally, we write $x = x(\underline{p}, \underline{q})$ if there is no confusion.*
2. *We say $\underline{p} \succcurlyeq \underline{q}$ if $p_{x(\underline{p},\underline{q})} \geq q_{x(\underline{p},\underline{q})}$. This gives a total order on $\mathcal{P}(n)$.*

First, we study the relation between two partitions $\underline{p} = [p_1, \dots, p_r], \underline{q} = [q_1, \dots, q_s]$ such that $d_{BV}(\underline{p}) = d_{BV}(\underline{q})$. Assuming $\underline{p} \succcurlyeq \underline{q}$ and denote $x = x(\underline{p}, \underline{q})$ for short, in the following lemma, we show that $\underline{p}_{\geq p_x - 1} \sqcup [p_x - 2]$ and $\underline{q}_{\geq p_x - 1}$ are closely related. Moreover, we construct partition $\underline{q}^\sharp \geq \underline{q}$ (resp. $\underline{p}^\flat \leq \underline{p}$) in the same fiber of Barbasch-Vogan duality map, which is "closer" to $\underline{p}$ (resp. $\underline{q}$), in the sense that if $\underline{p} \neq \underline{q}$, then

$$x(\underline{p}, \underline{q}^\sharp) > x(\underline{p}, \underline{q}), \ x(\underline{p}^\flat, \underline{q}) > x(\underline{p}, \underline{q}).$$

LEMMA 3.1. *Suppose $\underline{p} = [p_1, \dots, p_r], \underline{q} = [q_1, \dots, q_s]$ are two partitions in $\mathcal{P}_X(n)$ where $X \in \{B, C, D\}$ such that*

(i) $\underline{p} \succcurlyeq \underline{q}$ and $\underline{p} \neq \underline{q}$.
(ii) $d_{BV}(\underline{p}) = d_{BV}(\underline{q})$.

We denote $x = x(\underline{p}, \underline{q})$ for short and define

$$y := \min(\{1 \leq i \leq r \mid p_i < p_x - 1\} \sqcup \{r + 1\}).$$

Then the followings hold. (We set $p_\alpha = 0 = q_\beta$ for $\alpha > r$ and $\beta > s$.)

(a) $p_y = p_x - 2$, which is odd if $X \in \{B, D\}$ and even if $X = C$.
(b) $q_x = p_x - 1$, $q_z = p_z$ for $x < z < y$, $q_y = p_y + 1$, and $q_{y+1} \leq p_y$.
(c) Consider partitions

$$\underline{q}^\sharp := [p_1, \dots, p_y, q_{y+1}, \dots, q_s] \geq \underline{q},$$
$$\underline{p}^\flat := [q_1, \dots, q_y, p_{y+1}, \dots, p_r] \leq \underline{p}.$$

The partitions $\underline{q}^\sharp$ and $\underline{p}^\flat$ are of type X, and

$$d_{BV}(\underline{p}) = d_{BV}(\underline{p}^\flat) = d_{BV}(\underline{q}^\sharp) = d_{BV}(\underline{q}).$$

PROOF. We prove the lemma for type B, C and D separately. In the computation of collapse of partitions below, we frequently apply Lemma 2.1, while sometimes the detail is omitted in the argument.

Type B: For a partition $\underline{\mathfrak{p}}$ of type B, its Barbasch-Vogan dual is given by

$$d_{BV}(\underline{\mathfrak{p}}) = \underline{\mathfrak{p}}^-{}_C{}^*.$$

Since taking transpose of partitions is a bijection, Assumption (ii) is equivalent to

$$\underline{p}^-{}_C = \underline{q}^-{}_C. \tag{3.1}$$

First, we deal with the case that $|\underline{p}_{>p_x}|$ is even. By Lemma 2.1, we may replace $\underline{p}$ and $\underline{q}$ with $\underline{p}_{\leq p_x}$ and $\underline{q}_{\leq p_x}$ respectively, and assume $p_x = p_1$. After the replacement, (3.1) still holds, and $\underline{p}$ and $\underline{q}$ are still of type B. Note that $p_1 > 1$ by Assumption (i).

Since $\underline{q}^-{}_C$ contains at most $x-1$ copies of p_1, in order that (3.1) holds, p_1 and x must be both odd and the multiplicity of p_1 in $\underline{p}$ must be exactly x. Then we may write

$$\underline{p} = [p_1^x, (p_1-1)^{y-x-1}] \sqcup [p_y, \dots, p_r].$$

Note that $p_y < p_1 - 1$ by the definition of y, and hence $[p_y, \dots, p_r] = \underline{p}_{<p_1-1}$. Since $\underline{p}$ is of type B and $p_1 - 1$ is even, $y - x + 1$, the multiplicity of $p_1 - 1$ in $\underline{p}$, must be even. Under these parity conditions, we have

$$\underline{p}^-{}_C = [p_1^{x-1}, (p_1-1)^{y-x}] \sqcup [p'_y, p'_{y+1}, \dots],$$

where $0 \leq p'_y \leq p_y + 1 \leq p_1 - 1$ and $0 \leq p'_{y+1} \leq p_y < p_1 - 1$. Now we write

$$\underline{q} = [p_1^{x-1}, (p_1-1)^{2l}] \sqcup \underline{q}_{<p_1-1},$$

for some non-negative integer l. Since $|\underline{q}|$ is odd, we have $|\underline{q}_{<p_1-1}| \geq 1$ and hence

$$\underline{q}^- = [p_1^{x-1}, (p_1-1)^{2l}] \sqcup (\underline{q}_{<p_1-1})^-.$$

Applying Lemma 2.1 again,

$$\underline{q}^-{}_C = [p_1^{x-1}, (p_1-1)^{2l}] \sqcup (\underline{q}_{<p_1-1})^-{}_C.$$

Note that $(\underline{q}_{<p_1-1})^- \geq (\underline{q}_{<p_1-1})^-{}_C$, and hence any piece of $(\underline{q}_{<p_1-1})^-{}_C$ is smaller than $p_1 - 1$. Therefore, comparing the multiplicity of $p_1 - 1$ in both sides of (3.1), we must have $2l = y - x + 1$ and $p'_y = p_y + 1 = p_1 - 1$. This verifies both Parts (a) and (b).

For Part (c), note that $[q_{y+1}, \dots, q_s] = \underline{q}_{<p_1-1}$. We have

$$\begin{aligned}
(\underline{q}^\sharp)^-{}_C &= ([p_1^x, (p_1-1)^{y-x-1}] \sqcup [p_1 - 2, q_{y+1}, \dots, q_s]^-)_C \\
&= ([p_1^x, (p_1-1)^{y-x-1}])^-{}_C \sqcup ([p_1 - 1] \sqcup (\underline{q}_{<p_1-1})^-)_C \\
&= [p_1^{x-1}, (p_1-1)^{y-x}] \sqcup [p_1 - 1] \sqcup (\underline{q}_{<p_1-1})^-{}_C \\
&= \underline{q}^-{}_C.
\end{aligned}$$

Similarly, since $[p_y, p_{y+1}, \dots, p_r] = \underline{p}_{\leq p_1-2}$, we have

$$\begin{aligned}
\underline{p}^{-}{}_C &= ([p_1^x, (p_1-1)^{y-x-1}] \sqcup (\underline{p}_{\leq p_1-2})^{-})_C \\
&= ([p_1^x, (p_1-1)^{y-x-2}, p_1-2])_C \sqcup (\underline{p}_{\leq p_1-2})^{+-}{}_C \\
&= [p_1^{x-1}, (p_1-1)^{y-x}] \sqcup ([p_1-1] \sqcup [p_{y+1}, \dots, p_r]^{-})_C \\
&= [p_1^{x-1}, (p_1-1)^{y-x+1}] \sqcup ([p_{y+1}, \dots, p_r])^{-}{}_C \\
&= ([p_1^{x-1}, (p_1-1)^{y-x+1}] \sqcup [p_{y+1}, \dots, p_r])^{-}{}_C \\
&= (\underline{p}^{\flat})^{-}{}_C.
\end{aligned}$$

This completes the proof of the case that $|\underline{p}_{>p_x}|$ is even.

Next, we deal with the case that $|\underline{p}_{>p_x}|$ is odd. Denote $\widetilde{\underline{p}} := \underline{p}_{\leq p_x}$ and $\widetilde{\underline{q}} := \underline{q}_{\leq p_x}$, which are of type D. Lemma 2.1 implies

$$\widetilde{\underline{p}}^{+-}{}_C = \widetilde{\underline{q}}^{+-}{}_C. \tag{3.2}$$

Rewrite

$$\widetilde{\underline{p}} = [p_1^x, p_{x+1}, \dots], \ \widetilde{\underline{q}} = [p_1^{x-1}] \sqcup \widetilde{\underline{q}}_{<p_1},$$

where $p_{x+1} \leq p_1$, and denote

$$\ell_p := l((\widetilde{\underline{p}}^{+-}{}_C)_{\geq p_1}), \ \ell_q := l((\widetilde{\underline{q}}^{+-}{}_C)_{\geq p_1})$$

for short. Note that (3.2) implies that $\ell_p = \ell_q$.

If p_1 is even, then $\ell_q \leq x$ and $\ell_p \geq x$, where $\ell_p \geq x$ only if $p_{x+1} < p_1$. Thus $\ell_p = \ell_q$ implies that $p_{x+1} < p_1$ must hold, but then one of $\widetilde{\underline{p}}$ and $\widetilde{\underline{q}}$ is not of type D, a contradiction. Therefore, p_1 must be odd. Then $\ell_q \leq x-1$ and $\ell_p \geq x-1$, where $\ell_p = x-1$ only if $p_{x+1} < p_1$ and $x-1$ is odd. Thus we may rewrite

$$\begin{aligned}
\widetilde{\underline{p}} &= [p_1^x, (p_1-1)^{y-x-1}] \sqcup [p_y, \dots, p_r], \\
\widetilde{\underline{q}} &= [p_1^{x-1}, (p_1-1)^{2l}] \sqcup \widetilde{\underline{q}}_{<p_1-1}.
\end{aligned}$$

Note that since $|\widetilde{\underline{q}}|$ is even, $|\widetilde{\underline{q}}_{<p_1-1}| \geq 1$, and hence

$$\widetilde{\underline{q}}^{+-} = [p_1+1, p_1^{x-2}, (p_1-1)^{2l}] \sqcup (\widetilde{\underline{q}}_{<p_1-1})^{-}.$$

Therefore,

$$\begin{aligned}
\widetilde{\underline{p}}^{+-}{}_C &= [p_1+1, p_1^{x-2}, (p_1-1)^{y-x}] \sqcup [p'_y, p'_{y+1}, \dots], \\
\widetilde{\underline{q}}^{+-}{}_C &= [p_1+1, p_1^{x-2}, (p_1-1)^{2l}] \sqcup (\widetilde{\underline{q}}_{<p_1-1})^{-}{}_C,
\end{aligned}$$

where $0 \leq p'_y \leq p_y + 1 \leq p_1 - 1$ and $p'_{y+1} \leq p_y < p_1 - 1$. As $\widetilde{\underline{p}}$ is of type D, $y-x$ is odd. Therefore, comparing the multiplicity of $p_1 - 1$ in both sides of (3.2), we must have $2l = y - x + 1$ and $p'_y = p_y = p_1 - 1$. This verifies both Parts (a) and (b).

For Part (c), we consider

$$\begin{aligned}\widetilde{\underline{q}}^{\sharp} := (\underline{q}^{\sharp})_{\leq p_x} =& [p_1^x, (p_1-1)^{y-x-1}] \sqcup [p_y, q_{y+1}, \dots, q_s] \\ =& [p_1^x, (p_1-1)^{y-x-1}, p_1-2] \sqcup \widetilde{\underline{q}}_{<p_1-1},\end{aligned}$$

and

$$\widetilde{\underline{p}}^{\flat} := (\underline{p}^{\flat})_{\leq p_x} = [p_1^{x-1}, (p_1-1)^{y-x+1}] \sqcup [p_{y+1}, \dots, p_r].$$

Then by Lemma 2.1, it suffices to show that $(\widetilde{\underline{q}}^{\sharp})^{+-}{}_C = \widetilde{\underline{q}}^{+-}{}_C$ and $(\widetilde{\underline{p}}^{\flat})^{+-}{}_C = \widetilde{\underline{p}}^{+-}{}_C$. Indeed,

$$\begin{aligned}(\widetilde{\underline{q}}^{\sharp})^{+-}{}_C &= ([p_1+1, p_1^{x-1}, (p_1-1)^{y-x-1}])^{-}{}_C \sqcup ([p_1-1] \sqcup (\widetilde{\underline{q}}_{<p_1-1})^{-})_C \\ &= [p_1+1, p_1^{x-2}, (p_1-1)^{y-x}] \sqcup [p_1-1] \sqcup (\widetilde{\underline{q}}_{<p_1-1})^{-}{}_C \\ &= \widetilde{\underline{q}}^{+-}{}_C.\end{aligned}$$

Similarly, since $[p_y, p_{y+1}, \dots, p_r] = \widetilde{\underline{p}}_{\leq p_1-2}$, we have

$$\begin{aligned}\widetilde{\underline{p}}^{+-}{}_C &= ([p_1+1, p_1^{x-1}, (p_1-1)^{y-x-1}])^{-}{}_C \sqcup (\widetilde{\underline{p}}_{\leq p_1-2})^{+-}{}_C \\ &= [p_1+1, p_1^{x-2}, (p_1-1)^{y-x}] \sqcup ([p_1-1] \sqcup [p_{y+1}, \dots, p_r]^{-})_C \\ &= [p_1+1, p_1^{x-2}, p_1^{y-x+1}] \sqcup ([p_{y+1}, \dots, p_r])^{-}{}_C \\ &= ([p_1+1, p_1^{x-2}, p_1^{y-x+1}] \sqcup [p_{y+1}, \dots, p_r])^{-}{}_C \\ &= (\widetilde{\underline{p}}^{\flat})^{+-}{}_C.\end{aligned}$$

This completes the proof of the lemma for type B.

Type C: For a partition $\underline{\mathfrak{p}}$ of type C, its Barbasch-Vogan dual is given by

$$d_{BV}(\underline{\mathfrak{p}}) = \underline{\mathfrak{p}}^{+}{}_B{}^{*}.$$

Thus Assumption (ii) is equivalent to

$$\underline{p}^{+}{}_B = \underline{q}^{+}{}_B. \tag{3.3}$$

For simplicity, for a partition $\underline{\mathfrak{p}}$, we denote

$$\underline{\mathfrak{p}}_O := \begin{cases} \underline{\mathfrak{p}}_B & \text{if } |\underline{\mathfrak{p}}| \text{ is odd,} \\ \underline{\mathfrak{p}}_D & \text{if } |\underline{\mathfrak{p}}| \text{ is even.} \end{cases}$$

Then Lemma 2.1 in this case can be rephrased as

$$\underline{\mathfrak{p}}_O = \begin{cases} (\underline{\mathfrak{p}}_{>x})^{-}{}_O \sqcup (\underline{\mathfrak{p}}_{\leq x})^{+}{}_O & \text{if } l(\underline{\mathfrak{p}}_{>x}) + |\underline{\mathfrak{p}}_{>x}| \text{ is odd,} \\ (\underline{\mathfrak{p}}_{>x})_O \sqcup (\underline{\mathfrak{p}}_{\leq x})_O & \text{if } l(\underline{\mathfrak{p}}_{>x}) + |\underline{\mathfrak{p}}_{>x}| \text{ is even.} \end{cases}$$

First, we deal with the case that $l(\underline{p}_{>p_x}) + |\underline{p}_{>p_x}|$ is odd. In this case, $\underline{p}_{>p_x}$ is non-empty, and $l((\underline{p}^{+})_{>p_x}) + |(\underline{p}^{+})_{>p_x}|$ is even. Then we may replace

$\underline{p}$ and $\underline{q}$ with $\underline{p}_{\leq p_x}$ and $\underline{q}_{\leq p_x}$ respectively, and assume $p_1 = p_x$. After the replacement, (3.3) becomes

$$\underline{p}_O = \underline{q}_O, \tag{3.4}$$

and $\underline{p}$ and $\underline{q}$ are still of type C.

Since $\underline{q}_O$ contains at most $x-1$ copies of p_1, in order that (3.4) holds, we must have p_1 is even, x is odd and $p_{x+1} < p_1$. Therefore, we may write

$$\underline{p} = [p_1^x, (p_1-1)^{y-x-1}] \sqcup [p_y, \dots, p_r].$$

Note that $y-x-1$ is even since $\underline{p}$ is of type C. These parity conditions give

$$\underline{p}_O = [p_1^{x-1}, (p_1-1)^{y-x}] \sqcup [p'_y, p'_{y+1}, \dots],$$

where $0 \leq p'_y \leq p_y + 1 \leq p_1 - 1$, and $p'_{y+1} \leq p_y < p_1 - 1$. On the other hand, write

$$\underline{q} = [p_1^{x-1}, (p_1-1)^{2l}] \sqcup \underline{q}_{<p_1-1}.$$

Then we have

$$\underline{q}_O = [p_1^{x-1}, (p_1-1)^{2l}] \sqcup (\underline{q}_{<p_1-1})_O.$$

Comparing the multiplicity of $p_1 - 1$ in both sides of (3.4), we obtain $2l = y - x + 1$ and $p'_y = p_y + 1 = p_1 - 1$. This verifies both Parts (a) and (b) in this case.

For Part (c), $\underline{q}^\sharp$ and $\underline{p}^\flat$ are of the form

$$\underline{q}^\sharp = [p_1^x, (p_1-1)^{y-x-1}, p_1-2] \sqcup \underline{q}_{<p_1-1},$$
$$\underline{p}^\flat = [p_1^{x-1}, (p_1-1)^{y-x+1}] \sqcup [p_{y+1}, \dots, p_r],$$

after the replacement. It suffices to show that $(\underline{q}^\sharp)_O = \underline{q}_O$ and $(\underline{p}^\flat)_O = \underline{p}_O$. Indeed,

$$\begin{aligned}(\underline{q}^\sharp)_O &= ([p_1^x, (p_1-1)^{y-x-1}])^-{}_O \sqcup ([p_1-2] \sqcup \underline{q}_{<p_1-1})^+{}_O \\ &= [p_1^{x-1}, (p_1-1)^{y-x}] \sqcup [p_1-1] \sqcup (\underline{q}_{<p_1-1})_O \\ &= \underline{q}_O.\end{aligned}$$

Similarly,

$$\begin{aligned}\underline{p}_O &= ([p_1^x, (p_1-1)^{y-x-1}])^-{}_O \sqcup ([p_1-2] \sqcup [p_{y+1}, \dots, p_r])^+{}_O \\ &= [p_1^{x-1}, (p_1-1)^{y-x}] \sqcup [p_1-1] \sqcup ([p_{y+1}, \dots, p_r])_O \\ &= ([p_1^{x-1}, (p_1-1)^{y-x+1}])_O \sqcup ([p_{y+1}, \dots, p_r])_O \\ &= (\underline{p}^\flat)_O.\end{aligned}$$

This completes the proof of the case that $l(\underline{p}_{>p_x}) + |\underline{p}_{>p_x}|$ is odd.

Next, we deal with the case that $l(\underline{p}_{>p_x}) + |\underline{p}_{>p_x}|$ is even. If $\underline{p}_{>p_x}$ is non-empty, then $l((\underline{p}^+)_{>p_x}) + |(\underline{p}^+)_{>p_x}|$ is odd, and hence we may replace $\underline{p}$ and $\underline{q}$

with $\underline{p}_{\leq p_x}$ and $\underline{q}_{\leq p_x}$ respectively and assume $p_1 = p_x$. After the replacement, (3.3) still holds, and $\underline{p}$, $\underline{q}$ are still of type C.

Write

$$\underline{p} = [p_1^x, p_{x+1}, \dots], \ \underline{q} = [p_1^{x-1}, q_x, \dots],$$

where $p_{x+1} \leq p_1$ and $q_x < p_1$. Let

$$\ell_p := l((\underline{p}^+{}_O)_{\geq p_1}), \ \ell_q := l((\underline{q}^+{}_O)_{\geq p_1}).$$

Note that (3.3) implies $\ell_p = \ell_q$.

If p_1 is odd, then $\ell_q \leq x$ and $\ell_p \geq x$, where $\ell_p = x$ only if $p_{x+1} < p_1$. Thus $\ell_p = \ell_q$ implies that $p_{x+1} < p_1$, but then one of $\underline{p}, \underline{q}$ is not of type C, a contradiction. Therefore, p_1 must be even. Then $\ell_q \leq x-1$ and $\ell_p \geq x-1$, where $\ell_p = x-1$ only if $p_{x+1} < p_1$ and $x-1$ is odd. Thus we may rewrite

$$\begin{aligned}\underline{p} &= [p_1^x, (p_1-1)^{y-x-1}] \sqcup [p_y, \dots, p_r],\\ \underline{q} &= [p_1^{x-1}, (p_1-1)^{2l}] \sqcup \underline{q}_{<p_1-1}.\end{aligned}$$

Therefore,

$$\begin{aligned}\underline{p}^+{}_O &= [p_1+1, p_1^{x-2}, (p_1-1)^{y-x}] \sqcup [p'_y, p'_{y+1}, \dots],\\ \underline{q}^+{}_O &= [p_1+1, p_1^{x-2}, (p_1-1)^{2l}] \sqcup (\underline{q}_{<p_1-1})_O,\end{aligned}$$

where $0 \leq p'_y \leq p_y + 1 \leq p_1 - 1$ and $p'_{y+1} \leq p_y < p_1 - 1$. As $\underline{p}$ is of type C, $y_1 - x_1 - 1$ is even, and hence comparing the multiplicity of $p_1 - 1$ in both sides of (3.3) gives $2l = y - x + 1$ and $p'_y = p_y + 1 = p_1 - 1$. This verifies both Parts (a) and (b).

For Part (c), it suffices to show $(\underline{q}^\sharp)^+{}_O = \underline{q}^+{}_O$ and $(\underline{p}^\flat)^+{}_O = \underline{p}^+{}_O$. Indeed,

$$\begin{aligned}(\underline{q}^\sharp)^+{}_O &= ([p_1+1, p_1^{x-1}, (p_1-1)^{y-x-1}])^-{}_O \sqcup ([p_1-2] \sqcup \underline{q}_{<p_1-1})^+{}_O\\ &= [p_1+1, p_1^{x-2}, (p_1-1)^{y-x}] \sqcup [p_1-1] \sqcup (\underline{q}_{p_1-1})_O\\ &= \underline{q}^+{}_O.\end{aligned}$$

Similarly,

$$\begin{aligned}\underline{p}^+{}_O &= ([p_1+1, p_1^{x-1}, (p_1-1)^{y-x-1}])^-{}_O \sqcup ([p_1-2] \sqcup [p_{y+1}, \dots, p_r])^+{}_O\\ &= [p_1+1, p_1^{x-2}, (p_1-1)^{y-x}] \sqcup [p_1-1] \sqcup ([p_{y+1}, \dots, p_r])_O\\ &= ([p_1+1, p_1^{x-2}, (p_1-1)^{y-x+1}])_O \sqcup ([p_{y+1}, \dots, p_r])_O\\ &= (\underline{p}^\flat)^+{}_O.\end{aligned}$$

This completes the proof of the lemma for type C.

Type D: For a partition $\underline{\mathfrak{p}}$ of type D, its Barbasch-Vogan dual is given by

$$d_{BV}(\underline{\mathfrak{p}}) = \underline{\mathfrak{p}}^*{}_D = \underline{\mathfrak{p}}^{+-}{}_C{}^*,$$

where the last equality holds if $\underline{p}$ is of type D (see [1, Lemma 3.3]). Thus Assumption (ii) is equivalent to

$$\underline{p}^{+-}{}_C = \underline{q}^{+-}{}_C. \tag{3.5}$$

First, we deal with the case that $|\underline{p}_{>p_x}|$ is odd. In this case, both $\underline{p}_{>p_x}$ and $\underline{p}_{\leq p_x}$ are non-empty, and hence $|(\underline{p}^{+-})_{>p_x}|$ is even. Then if we denote $\widetilde{\underline{p}} := \underline{p}_{\leq p_x}$ and $\widetilde{\underline{q}} := \underline{q}_{\leq p_x}$, which are of type B, then (3.5) becomes

$$\widetilde{\underline{p}}^{-}{}_C = \widetilde{\underline{q}}^{-}{}_C. \tag{3.6}$$

Therefore, Parts (a) and (b) in this case follow from Parts (a) and (b) for type B, which are already established above. Moreover, if we define $\widetilde{\underline{q}^\sharp} := (\underline{q}^\sharp)_{\leq p_x}$ and $\widetilde{\underline{p}^\flat} := (\underline{p}^\flat)_{\leq p_x}$, then Part (c) holds if $(\widetilde{\underline{q}^\sharp})^-{}_C = \widetilde{\underline{q}}^-{}_C$ and $(\widetilde{\underline{p}^\flat})^-{}_C = \widetilde{\underline{p}}^-{}_C$, which are also verified in Part (c) for type B. This completes the proof of this case.

Next, we deal with the case that $|\underline{p}_{>p_x}|$ is even. If $\underline{p}_{>p_x}$ is non-empty, then $|(\underline{p}^{+-})_{>p_x}|$ is odd, and hence we may replace $\underline{p}$ and $\underline{q}$ with $\underline{p}_{\leq p_x}$ and $\underline{q}_{\leq p_x}$ respectively and assume $p_1 = p_x$. After the replacement, (3.5) still holds, and $\underline{p}$, $\underline{q}$ are still of type D. Then Parts (a), (b) and (c) are already verified in the second case of the proof of type B, where (3.2) holds. This completes the proof of the lemma. □

In the following example, we denote $\underline{q}^\sharp = \underline{q}^\sharp(\underline{p}, \underline{q})$ and $\underline{p}^\flat = \underline{p}^\flat(\underline{p}, \underline{q})$ to keep track of the pair $(\underline{p}, \underline{q})$ where $\underline{p} \succcurlyeq \underline{q}$.

EXAMPLE 3.2. *Let* $\underline{\mathfrak{p}} = [7^2, 5^2, 3^2, 1^2]$*, a special partition of type* D*. Consider the following partitions in* $d_{BV}^{-1}(\underline{\mathfrak{p}})$*:*

$$\underline{p_1} = [7^2, 5, 4^2, 2^2, 1],\ \underline{p_2} = [7, 6^2, 5, 3, 2^2, 1],\ \underline{p_3} = [7, 6^2, 4^2, 3, 1^2],$$

where $\underline{p_1} \succcurlyeq \underline{p_2} \succcurlyeq \underline{p_3}$*. Then*

$$\begin{aligned}
\underline{p_4} &:= \underline{q}^\sharp(\underline{p_1}, \underline{p_2}) = [7^2, 5^2, 3, 2^2, 1],\\
\underline{p_5} &:= \underline{q}^\sharp(\underline{p_1}, \underline{p_3}) = [7^2, 5, 4^2, 3, 1^2],\\
\underline{p_6} &:= \underline{q}^\sharp(\underline{p_2}, \underline{p_3}) = [7, 6^2, 5, 3^2, 1^2],\\
\underline{p_7} &:= \underline{q}^\sharp(\underline{p_4}, \underline{p_5}) = [7^2, 5^2, 3^2, 1^2] = \underline{q}^\sharp(\underline{p_5}, \underline{p_6}) = \underline{q}^\sharp(\underline{p_4}, \underline{p_6}),\\
\underline{p_8} &:= \underline{p}^\flat(\underline{p_1}, \underline{p_2}) = [7, 6^2, 4^2, 2^2, 1] = \underline{p}^\flat(\underline{p_1}, \underline{p_3}) = \underline{p}^\flat(\underline{p_2}, \underline{p_3}).
\end{aligned}$$

Indeed, $d_{BV}^{-1}(\underline{\mathfrak{p}}) = \{\underline{p_1}, \dots, \underline{p_8}\}$. *We visualize the dominance ordering in the following picture.*

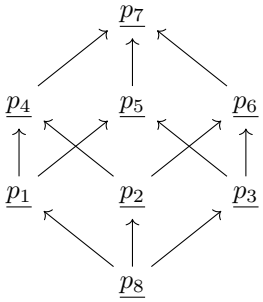

In the above example, there exists a unique maximal/minimal element in $d_{BV}^{-1}(\underline{\mathfrak{p}})$. This is not a coincidence as shown in the following corollary.

COROLLARY 3.3. *Let* $(X, X') \in \{(B,C),(C,B),(D,D)\}$ *and take a* $\underline{\mathfrak{p}} \in \mathcal{P}_{X'}$ *such that* $d_{BV}^{-1}(\underline{\mathfrak{p}})$ *is non-empty. Here* $d_{BV} = d_{BV,(X,X')}$. *Then the followings hold.*

(a) For arbitrary $\underline{p_1}, \underline{p_2} \in d_{BV}^{-1}(\underline{\mathfrak{p}})$, *there exist* $\underline{q}^{\uparrow}, \underline{q}^{\downarrow} \in d_{BV}^{-1}(\underline{\mathfrak{p}})$ *such that*

$$\underline{q}^{\uparrow} \geq \underline{p_i},\ \underline{q}^{\downarrow} \leq \underline{p_i}$$

for $i = 1, 2$.

(b) The set $d_{BV}^{-1}(\underline{\mathfrak{p}})$ *has a unique maximal element and a unique minimal element under the dominance order. Moreover, the unique maximal element is exactly* $d_{BV,(X',X)}(\underline{\mathfrak{p}})$.

PROOF. For Part (a), we apply induction on

$$t(\underline{p_1}, \underline{p_2}) := \max(l(\underline{p_1}), l(\underline{p_2})) + 1 - x(\underline{p_1}, \underline{p_2}) \geq 0.$$

Note that $t = 0$ if and only if $\underline{p_1} = \underline{p_2}$, where the conclusion trivially holds.

Suppose that $t(\underline{p_1}, \underline{p_2}) = k > 0$ and that the conclusion is verified for every pair $(\underline{p_1}', \underline{p_2}') \in d_{BV}^{-1}(\underline{\mathfrak{p}}) \times d_{BV}^{-1}(\underline{\mathfrak{p}})$ with $t(\underline{p_1}', \underline{p_2}') < k$. We may assume $\underline{p_1} \succcurlyeq \underline{p_2}$ so that $\underline{p_1}^{\flat}$ and $\underline{p_2}^{\sharp}$ is defined in Lemma 3.1(c). Then by the definition of $\underline{p_1}^{\flat}$ and $\underline{p_2}^{\sharp}$ there, we have strict inequality

$$x(\underline{p_1}, \underline{p_2}^{\sharp}) > x(\underline{p_1}, \underline{p_2}),\ x(\underline{p_1}^{\flat}, \underline{p_2}) > x(\underline{p_1}, \underline{p_2}),$$

and

$$\max(l(\underline{p_1}), l(\underline{p_2})) = \max(l(\underline{p_1}^{\flat}), l(\underline{p_2})) = \max(l(\underline{p_1}), l(\underline{p_2}^{\sharp})).$$

Therefore, we have

$$t(\underline{p_1}, \underline{p_2}^{\sharp}) < t(\underline{p_1}, \underline{p_2}),\ t(\underline{p_1}^{\flat}, \underline{p_2}) < t(\underline{p_1}, \underline{p_2}).$$

Thus by the induction hypothesis, there exist $\underline{q}^{\uparrow}$ and $\underline{q}^{\downarrow}$ such that

$$\begin{cases} \underline{q}^{\uparrow} \geq \underline{p}_1, \\ \underline{q}^{\uparrow} \geq \underline{p}_2{}^{\sharp} \geq \underline{p}_2, \end{cases} \qquad \begin{cases} \underline{q}^{\downarrow} \leq \underline{p}_1{}^{\flat} \leq \underline{p}_1, \\ \underline{q}^{\downarrow} \leq \underline{p}_2. \end{cases}$$

This completes the proof of Part (a).

For Part (b), the uniqueness of the maximal and minimal element follows from Part (a). For the second part, we recall that for any partition $\underline{p}$ of type X,

(i) $d_{BV,(X,X')}(\underline{p}) = d_{BV,(X,X')} \circ d_{BV,(X',X)} \circ d_{BV,(X,X')}(\underline{p})$, and
(ii) $d_{BV,(X',X)} \circ d_{BV,(X,X')}(\underline{p}) \geq \underline{p}$.

See [3, Proposition A2, Corollary A3]. Let $\underline{p} \in d_{BV}^{-1}(\underline{\mathfrak{p}})$. By (i),

$$\begin{aligned} \underline{\mathfrak{p}} &= d_{BV,(X,X')}(\underline{p}) = d_{BV,(X,X')} \circ d_{BV,(X',X)} \circ d_{BV,(X,X')}(\underline{p}) \\ &= d_{BV,(X,X')}(d_{BV,(X',X))}(\underline{\mathfrak{p}})), \end{aligned}$$

and hence $d_{BV,(X',X)}(\underline{\mathfrak{p}})$ is in $d_{BV}^{-1}(\underline{\mathfrak{p}})$. By (ii),

$$d_{BV}(\underline{\mathfrak{p}}) = d_{BV,(X',X)} \circ d_{BV,(X,X')}(\underline{p}) \geq \underline{p}.$$

This completes the proof of the corollary. □

Next, given a partition $\underline{p} \in \mathcal{P}_X$, where $X \in \{B, C, D\}$, we describe the necessary and sufficient conditions on $\underline{q}$ such that $\underline{p} \geq \underline{q}$ and $d_{BV}(\underline{p}) = d_{BV}(\underline{q})$ in the following two lemmas.

LEMMA 3.2. *Let $X \in \{B, C, D\}$. Suppose $\underline{p} = [p_1, \dots, p_r], \underline{q} = [q_1, \dots, q_s] \in \mathcal{P}_X(n)$ satisfy that $\underline{p} \geq \underline{q}$ and $d_{BV}(\underline{p}) = d_{BV}(\underline{q})$. Then there exists a sequence of pair of positive integers $\{(x_i, y_i)\}_{i=1}^{\alpha}$ where*

(a) $1 \leq x_i < y_i \leq r+1$,
(b) $p_{x_i} = p_{x_i+1} + 1 = \cdots = p_{y_i-1} + 1 = p_{y_i} + 2$, where we set $p_{r+1} = 0$,
(c) the sequence $(p_{x_1}, \dots, p_{x_\alpha})$ is strictly decreasing,

such that $\underline{q}$ can be obtained from $\underline{p}$ by replacing $\{p_{x_i}, p_{y_i}\}_{i=1}^{\alpha}$ in $\underline{p}$ with $\{p_{x_i} - 1, p_{y_i} + 1\}_{i=1}^{\alpha}$.

PROOF. Note that $\underline{p} \geq \underline{q}$ implies that $\underline{p} \succcurlyeq \underline{q}$. We fix $\underline{\mathfrak{p}} := d_{BV}(\underline{p})$, and apply induction on

$$t(\underline{p}, \underline{q}) := l(\underline{p}) + 1 - x(\underline{p}, \underline{q}).$$

Note that under the assumption that $\underline{p} \geq \underline{q}$, $t(\underline{p}, \underline{q}) = 0$ if and only if $\underline{p} = \underline{q}$, where the conclusion holds trivially.

Suppose that $t(\underline{p}, \underline{q}) = k > 0$ and that the conclusion is verified for every pair $(\underline{p}', \underline{q}') \in d_{BV}^{-1}(\underline{\mathfrak{p}}) \times d_{BV}^{-1}(\underline{\mathfrak{p}})$ with $\underline{p}' \geq \underline{q}'$ and $t(\underline{p}', \underline{q}') < k$. Recall that in Lemma 3.1, we define $x = x(\underline{p}, \underline{q}) < y \leq r+1$ and define

$$\underline{p}^{\flat} := [q_1, \dots, q_y, p_{y+1}, \dots, p_r],$$

which is also in $d_{BV}^{-1}(\underline{\mathfrak{p}})$ by Part (c) of that Lemma. By definition, we have

$$\underline{p} \geq \underline{p}^{\flat} \geq \underline{q},$$

and

$$x(\underline{p}^{\flat}, \underline{q}) > x(\underline{p}, \underline{q}).$$

Note that $\underline{p}^{\flat}$ is obtained from $\underline{p}$ by replacing p_x, p_y in $\underline{p}$ with $p_x - 1, p_y + 1$.

If $l(\underline{p}^{\flat}) > l(\underline{p})$, then it is not hard to see from the construction that $y = r + 1$ and $\underline{p}^{\flat} = \underline{q}$, and hence the conclusion holds with $\alpha = 1$. If $l(\underline{p}^{\flat}) = l(\underline{p})$, then $t(\underline{p}^{\flat}, \underline{q}) < t(\underline{p}, \underline{q})$, and hence the induction hypothesis implies that there exist $\{(x_i, y_i)\}_{i=2}^{\alpha}$ such that $\underline{q}$ can be obtained from $\underline{p}^{\flat}$ by replacing $\{p_{x_i}, p_{y_i}\}_{i=2}^{\alpha}$ in $\underline{p}^{\flat}$ with $\{p_{x_i} - 1, p_{y_i} + 1\}_{i=2}^{\alpha}$. Note that if $\alpha \geq 2$, then

$$p_{x_2} \leq p_{y+1} = p_x - 2 < p_x.$$

Therefore, the conclusion holds with $(x_1, y_1) = (x, y)$. This completes the proof of the lemma. □

LEMMA 3.3. *Let $X \in \{B, C, D\}$. Suppose $\underline{p} = [p_1, \dots, p_r] \in \mathcal{P}_X(n)$, and $\{(x_i, y_i)\}_{i=1}^{m}$ is a sequence of pairs of integers satisfies Conditions (a),(b) and (c) in Lemma 3.2. If we define $\underline{q}$ by replacing $\{p_{x_i}, p_{y_i}\}_{i=1}^{\alpha}$ in $\underline{p}$ with $\{p_{x_i} - 1, p_{y_i} + 1\}_{i=1}^{\alpha}$, then $d_{BV}(\underline{p}) = d_{BV}(\underline{q})$ if and only if the following holds for all $1 \leq i \leq \alpha$, where we denote m_i the multiplicity of p_{x_i} in $\underline{p}$.*

(i) If $X = B$, then p_{x_i} is odd and $m_i + |\underline{p}_{>p_{x_i}}|$ is odd.

(ii) If $X = C$, then p_{x_i} is even and $m_i + l(\underline{p}_{>p_{x_i}}) + |\underline{p}_{>p_{x_i}}|$ is even.

(iii) If $X = D$, then p_{x_i} is odd and $m_i + |\underline{p}_{>p_{x_i}}|$ is even.

PROOF. For $1 \leq j \leq \alpha$, we denote $\underline{q}_j$ by replacing $\{p_{x_i}, p_{y_i}\}_{i=1}^{j}$ in $\underline{p}$ with $\{p_{x_i} - 1, p_{y_i} + 1\}_{i=1}^{j}$. Also, we set $\underline{q}_0 = \underline{p}$. Then it suffices to show the conditions are equivalent to $d_{BV}(\underline{q}_j) = d_{BV}(\underline{q}_{j+1})$ for $j = 0, \dots, \alpha - 1$. Note that Conditions (a), (b) and (c) in Lemma 3.2 imply that for $1 \leq i \leq \alpha$,

$$|\underline{p}_{>p_{x_i}}| = |(\underline{q}_{i-1})_{>p_{x_i}}|, \quad l(\underline{p}_{>p_{x_i}}) = l((\underline{q}_{i-1})_{>p_{x_i}}).$$

Therefore, we may assume $\alpha = 1$.

The necessary direction is already shown in the proof of Lemma 3.1. Also, the computation of the sufficient direction is identical to the verification of the equality $d_{BV}(\underline{p}^{\flat}) = d_{BV}(\underline{p})$ in the proof of Lemma 3.1(c), which we omit. This completes the proof of the lemma. □

Finally, we give a complete description of the set $d_{BV}^{-1}(\underline{\mathfrak{p}})$ using its unique maximal element $d_{BV}(\underline{\mathfrak{p}})$.

THEOREM 3.4. *Let $(X, X') \in \{(B,C),(C,B),(D,D)\}$ and $\underline{\mathfrak{p}}$ be a special partition of type X'. Write $d_{BV}(\underline{\mathfrak{p}}) =: \underline{p} = [p_1^{m_1}, \dots, p_r^{m_r}]$, and define a subset $I \subseteq \{1, \dots, r\}$ type by type as follows. (We set $p_{r+1} = 0$ and $m_{r+1} = 1$.)*

(i) When $X = B$,

$$I := \left\{ 1 \le i \le r \;\middle|\; \begin{array}{c} p_{i+1}=p_i-2 \text{ or } p_{i+2}=p_i-2, \\ p_i \text{ is odd, and } m_i+\sum_{j=1}^{i-1} m_j p_j \text{ is odd.} \end{array} \right\}.$$

(ii) When $X = C$,

$$I := \left\{ 1 \le i \le r \;\middle|\; \begin{array}{c} p_{i+1}=p_i-2 \text{ or } p_{i+2}=p_i-2, \\ p_i \text{ is even, and } m_i+\sum_{j=1}^{i-1} m_j (p_j+1) \text{ is even.} \end{array} \right\}.$$

(iii) When $X = D$,

$$I := \left\{ 1 \le i \le r \;\middle|\; \begin{array}{c} p_{i+1}=p_i-2 \text{ or } p_{i+2}=p_i-2, \\ p_i \text{ is odd, and } m_i+\sum_{j=1}^{i-1} m_j p_j \text{ is even.} \end{array} \right\}.$$

For any subset $J \subseteq I$, we define $\underline{p}_J$ from $\underline{p}$ by reducing the multiplicity of p_j and $p_j - 2$ by 1 and increasing the multiplicity of $p_j - 1$ by 2 for each $j \in J$.

Then the following map is a bijection of partially ordered sets

$$\begin{aligned} (2^I, \ge) &\longrightarrow (d_{BV}^{-1}(\underline{\mathfrak{p}}), \ge) \\ J &\longmapsto \underline{p}_J, \end{aligned}$$

where $(2^I, \ge)$ is the power set of I with the partial ordering defined by $J_1 \ge J_2$ if $J_1 \subseteq J_2$.

PROOF. This follows directly by applying Lemmas 3.2 and 3.3 to $\underline{p} = d_{BV}(\underline{\mathfrak{p}})$, the unique maximal element in $d_{BV}^{-1}(\underline{\mathfrak{p}})$. □

We remark that Case (iii) in above Theorem can be viewed as the inverse of [5, Lemma 6.3.9].

EXAMPLE 3.5. *We explain Theorem 3.4 on Example 3.2. We have $d_{BV}(\underline{\mathfrak{p}}) = [7^2, 5^2, 3^2, 1^2] =: \underline{p}$. Then $I = \{1, 2, 3\}$, and $\underline{p_k} = \underline{p}_{J_k}$, where*

$$J_1 = \{2,3\}, J_2 = \{1,3\}, J_3 = \{1,2\}, J_4 = \{3\},$$
$$J_5 = \{2\}, J_6 = \{1\}, J_7 = \emptyset, J_8 = \{1,2,3\}.$$

The following corollary is a useful criterion to argue $d_{BV}(\underline{p}) \ne d_{BV}(\underline{q})$.

COROLLARY 3.6. *Suppose $\underline{p} = [p_1, \dots, p_r] \ge \underline{q} = [q_1, \dots, q_s]$ are of the same type and $d_{BV}(\underline{p}) = d_{BV}(\underline{q})$. Then for any $1 \le t \le r$, we have*

$$0 \le \sum_{i=1}^{t} p_i - \sum_{i=1}^{t} q_i \le 1.$$

PROOF. This follows from the explicit description in Theorem 3.4. □

Finally, for $(X, X') \in \{(B,C),(C,B),(D,D)\}$ and a special $\mathcal{O}' \in \mathcal{N}_{X'}$, we relate $d_{BV}^{-1}(\mathcal{O}')$ with $d_{BV}^{-1}(\underline{p}_{\mathcal{O}'})$ in the following proposition.

PROPOSITION 3.7. *Let* $(X, X') \in \{(B,C),(C,B),(D,D)\}$. *For each special* $\mathcal{O}' \in \mathcal{N}_{X'}$, *we have the following.*

(a) If $\underline{\mathfrak{p}} := \underline{p}_{\mathcal{O}'}$ *is not very even of type D, then any* $\underline{p} \in d_{BV}^{-1}(\underline{\mathfrak{p}})$ *is not very even, and*

$$d_{BV}^{-1}(\mathcal{O}') = \{\mathcal{O}_{\underline{p}} \mid \underline{p} \in d_{BV}^{-1}(\underline{\mathfrak{p}})\}.$$

(b) If $\underline{\mathfrak{p}} := \underline{p}_{\mathcal{O}'}$ *is very even of type D, then*

$$d_{BV}^{-1}(\mathcal{O}') = \{d_{BV}(\mathcal{O}')\},$$

which is a singleton.

PROOF. It suffices to show that if $\underline{\mathfrak{p}}$ is very even of type D, then $d_{BV}^{-1}(\underline{\mathfrak{p}}) = \{d_{BV}(\underline{\mathfrak{p}})\}$. Indeed, it is not hard to see that $\underline{\mathfrak{p}}^*$ is also very even of type D. Therefore, we may write

$$d_{BV}(\underline{\mathfrak{p}}) = \underline{\mathfrak{p}}^* = \underline{p} = [p_1^{m_1}, \ldots, p_r^{m_r}],$$

where p_i and m_i are all even. Then the index set I defined in Theorem 3.4 is the empty set, and hence $d_{BV}^{-1}(\underline{\mathfrak{p}}^*)$ is a singleton. This completes the proof of the proposition. □

ACKNOWLEDGEMENTS.

The authors would like to thank Dihua Jiang for his interests, constant support, and helpful discussions. The authors also would like to thank the referee for careful reading of this paper and for helpful comments and suggestions. Part of this work was done when the second named author was visiting the National Center for Theoretical Science, for which he thanks for their hospitality.

REFERENCES

[1] P. Achar, *An order-reversing duality map for conjugacy classes in Lusztig's canonical quotient*, Transform. Groups **8** (2003), 107–145.

[2] J. Arthur, *The endoscopic classification of representations: Orthogonal and symplectic groups*, Amer. Math. Soc. Colloq. Publ. Vol. **61**, American Mathematical Society, Providence, RI, 2013.

[3] D. Barbasch and D. Vogan, *Unipotent representations of complex semisimple groups*, Ann. of Math. (2) **121** (1985), 41–110.

[4] L. Clozel, *Characters of nonconnected, reductive p-adic groups*, Canad. J. Math. **39** (1987), 149–167.

[5] D. Collingwood and W. McGovern, Nilpotent orbits in semisimple Lie algebras, Van Nostrand Reinhold Co., New York, 1993.

[6] D. Ciubotaru, L. Mason-Brown and E. Okada, *Wavefront sets of unipotent representations of reductive p-adic groups I*, Preprint, (2021), `arXiv:2112.14354`.

[7] D. Ciubotaru, L. Mason-Brown and E. Okada, *Some unipotent Arthur packets for reductive p-adic groups*, Int. Math. Res. Not. IMRN, to appear, `arXiv:2112.14354`.

[8] D. Ciubotaru, L. Mason-Brown and E. Okada, *Wavefront sets of unipotent representations of reductive p-adic groups II*, Preprint, (2023), `arXiv:2303.10713`.

[9] Harish-Chandra, *Admissible invariant distributions on reductive p-adic groups*, in: Lie theories and their applications (Proc. Ann. Sem. Canad. Math. Congr., Queen's Univ., Kingston, Ont., 1977), Queen's Papers in Pure Appl. Math., No. **48**, Queen's Univ., Kingston, ON, 1978, pp. 281–347.

[10] A. Hazeltine, B. Liu, C. Lo and Q. Zhang, *The closure ordering conjecture on local L-parameters in local Arthur packets of classical groups*, Preprint, (2022).

[11] A. Hazeltine, B. Liu, C. Lo and F. Shahidi, *On the upper bound of wavefront sets of representations of p-adic groups*, Preprint, (2023).

[12] C. Jantzen and B. Liu, *The generic dual of p-adic split* SO_{2n} *and local Langlands parameters*, Israel J. Math. **204** (2014), 199–260.

[13] C. Jantzen and B. Liu, *The generic dual of p-adic groups and Local Langlands parameters*, Preprint, (2022).

[14] D. Jiang, *Automorphic Integral transforms for classical groups I: Endoscopy correspondences*, in: Automorphic forms and related geometry: assessing the legacy of I.I. Piatetski-Shapiro, Contemp. Math. **614**, American Mathematical Society, Providence, RI, 2014, pp. 179–242.

[15] D. Jiang and D. Soudry, *Generic representations and local Langlands reciprocity law for p-adic* SO_{2n+1}, in: Contributions to automorphic forms, geometry, and number theory, Johns Hopkins Univ. Press, Baltimore, MD, 2004, pp. 457–519.

[16] T. Konno, *Twisted endoscopy and the generic packet conjecture*, Israel J. Math. **129** (2002), 253–289.

[17] B. Liu, *Genericity of representations of p-adic* Sp_{2n} *and local Langlands parameters*, Canad. J. Math. **63** (2011), 1107–1136.

[18] B. Liu and C. Lo, *On the weak local Arthur packets conjecture of split classical groups*, Preprint, (2023).

[19] B. Liu and F. Shahidi, *Jiang's conjecture on the wavefront sets of local Arthur packets*, Submitted, (2023).

[20] G. Lusztig, *Characters of reductive groups over finite fields*, in: Proceedings of the International Congress of Mathematicians, Vol. 1, 2 (Warsaw, 1983), PWN – Polish Scientific Publishers, Warsaw, 1984, pp. 877–880.

[21] C. Mœglin and J.-L. Waldspurger, *Modèles de Whittaker dégénérés pour des groupes p-adiques*, Math. Z. **196** (1987), 427–452.

[22] F. Shahidi, *A proof of Langlands' conjecture on Plancherel measures; complementary series for p-adic groups*, Ann. of Math. (2) **132** (1990), 273–330.

[23] N. Spaltenstein, Classes unipotentes et sous-groupes de Borel, Lecture Notes in Math. **946**, Springer-Verlag, Berlin-New York, 1982.

[24] C.-C. Tsai, *Geometric wave-front set may not be a singleton*, J. Amer. Math. Soc. **37** (2024), 281–304.

[25] S. Varma, *On descent and the generic packet conjecture*, Forum Math. **29** (2017), 111–155.

[26] J.-L. Waldspurger, *Intégrales orbitales nilpotentes et endoscopie pour les groupes classiques non ramifiés*, Astérisque **269**, 2001.

[27] J.-L. Waldspurger, *Représentations de réduction unipotente pour* $SO(2n+1)$*, III: exemples de fronts d'onde*, Algebra Number Theory **12** (2018), 1107–1171.

Jiangova slutnja i vlakna Barbasch-Vogan dualnosti

Baiying Liu, Chi-Heng Lo i Freydoon Shahidi

SAŽETAK. Poznata Shahidijeva slutnja kaže da temperirani L–paketi imaju generičke članove. Prirodna generalizacija Shahidijeve slutnje na ne-temperiranine lokalne Arthurove pakete je Jiangova slutnja koja karakterizira odnos između strukture lokalnih Arthurovih parametara i gornjih granica valnih fronti reprezentacija u lokalnim Arthurovim paketima. Jiangova slutnja temelji se na dualnosti Barbascha i Vogana. U ovom radu, najprije dajemo pregled recentnih rezultata vezanih za Jiangovu slutnju, a zatim eksplicitno opisujemo vlakna Barbasch-Vogan dualnosti za klasične grupe.

Baiying Liu
Department of Mathematics
Purdue University
West Lafayette, IN, 47907, USA
E-mail: liu2053@purdue.edu

Chi-Heng Lo
Department of Mathematics
Purdue University
West Lafayette, IN, 47907, USA
E-mail: lo93@purdue.edu

Freydoon Shahidi
Department of Mathematics
Purdue University
West Lafayette, IN, 47907, USA
E-mail: shahidi@math.purdue.edu

Received: 10.7.2023.
Revised: 29.11.2023.
Accepted: 12.12.2023.

RAD HAZU. MATEMATIČKE ZNANOSTI
Vol. 28 = 558 (2024): 131-149
DOI: https://doi.org/10.21857/yrvgqt3529

A NOTE ON BOUNDARY COMPONENTS OF ARITHMETIC QUOTIENTS OF THE GROUP SL_2 OVER AN ALGEBRAIC NUMBER FIELD

Joachim Schwermer

Dedicated to M. Tadić on the occasion of his 70th birthday

Abstract. Given an algebraic number field k, we consider quotients X_G/Γ associated with arithmetic subgroups Γ of the special linear algebraic k-group $G = SL_2$. The group G is k-simple, of k-rank one, and split over k. The Lie group G_∞ of real points of the $\mathbb{Q}$-group $\mathrm{Res}_{k/\mathbb{Q}}(G)$, obtained by restriction of scalars, is the finite direct product $G_\infty = \prod_{v\in V_{k,\infty}} G_v = SL_2(\mathbb{R})^s \times SL_2(\mathbb{C})^t$, where the product ranges over the set $V_{k,\infty}$ of all archimedean places of k, and s (resp. t) denotes the number of real (resp. complex) places of k. The corresponding symmetric space is denoted by X_G.

Using reduction theory, one can construct an open subset $Y_\Gamma \subset X_G/\Gamma$ such that its closure $\overline{Y}_\Gamma$ is a compact manifold with boundary $\partial\overline{Y}_\Gamma$, and the inclusion $\overline{Y}_\Gamma \longrightarrow X_G/\Gamma$ is a homotopy equivalence. The connected components $Y^{[P]}$ of the boundary $\partial\overline{Y}_\Gamma$ are in one-to-one correspondence with the finite set of Γ-conjugacy classes of minimal parabolic k-subgroups of G. We are concerned with the geometric structure of the boundary components. Each component carries the natural structure of a fibre bundle. We prove that the basis of this bundle is homeomorphic to the torus T^{s+t-1} of dimension $s + t - 1$, has the compact fibre T^m of dimension $m = s + 2t = [k : \mathbb{Q}]$, and its structure group is $SL_m(\mathbb{Z})$. Finally, we determine the cohomology of $Y^{[P]}$.

1. Introduction

Given an algebraic number field k, we consider quotients X_G/Γ associated with arithmetic subgroups Γ of the special linear algebraic k-group $G = SL_2$. This group is k-simple, k-split, and of k-rank one. The Lie group G_∞ of real points of the $\mathbb{Q}$-group $\mathrm{Res}_{k/\mathbb{Q}}(G)$, obtained by restriction of scalars, is the finite direct product $G_\infty = \prod_{v\in V_{k,\infty}} G_v = SL_2(\mathbb{R})^s \times SL_2(\mathbb{C})^t$, where

2020 *Mathematics Subject Classification.* 11F75, 57N65, 11R52.
Key words and phrases. Cohomology of arithmetic groups, Hilbert modular varieties.

the product ranges over the set $V_{k,\infty}$ of all archimedean places of k, and s (resp. t) denotes the number of real (resp. complex) places of k. The corresponding symmetric space is denoted by X_G. In fact, there is a G_∞-invariant Riemannian metric on X_G, and, if Γ is torsion-free, the homogenous space X_G/Γ carries the structure of a Riemannian manifold of finite volume.

Via reduction theory there exists an open subset $Y_\Gamma \subset X_G/\Gamma$ such that its closure $\overline{Y}_\Gamma$ is a compact manifold with boundary $\partial\overline{Y}_\Gamma$, and the inclusion $\overline{Y}_\Gamma \longrightarrow X_G/\Gamma$ is a homotopy equivalence. The connected components $Y^{[P]}$ of the boundary $\partial\overline{Y}_\Gamma$ are parametrised by the finite set of Γ-conjugacy classes of minimal parabolic k-subgroups of G. We are concerned with the geometric structure of the boundary components. Induced by a Levi decomposition $P = LN$ (with N the unipotent radical of P), each component carries the structure of a fibre bundle $N_\infty/(N_\infty \cap \Gamma) \longrightarrow Y^{[P]} \longrightarrow Z_L/\Gamma_L$ where the basis is a locally symmetric space originating with the Levi subgroup L. We prove that the basis of this bundle is homeomorphic to the torus T^{s+t-1} of dimension $s+t-1$, has the compact fibre T^m of dimension $m = [k:\mathbb{Q}]$, and its structure group is $SL_m(\mathbb{Z})$. Finally, we determine the cohomology of $Y^{[P]}$, thereby giving a proof of Proposition 1.1 in [4]. The action of the fundamental group Γ_L on $N_\infty/(N_\infty \cap \Gamma)$ extends to a natural action on the cohomology $H^*(N_\infty/(N_\infty \cap \Gamma), \mathbb{C})$ of the fibre. This gives rise to a local coefficient system, to be denoted $\mathsf{H}^*(F_b, \mathbb{C})$, on the pathwise connected base space $B = Z_L/\Gamma_L$. Here $F_b \cong N_\infty/(N_\infty \cap \Gamma)$ denotes the fibre over $b \in B$. We obtain

$$H^*(Y^{[P]}, \mathbb{C}) \cong H^*(Z_L/\Gamma_L, \mathsf{H}^*(F_b, \mathbb{C})) \cong \\ H^*(Z_L/\Gamma_L, \mathbb{C}) \otimes H^*(N_\infty/(N_\infty \cap \Gamma), \mathbb{C})^{\Gamma_L},$$

where the term $H^*(N_\infty/(N_\infty \cap \Gamma), \mathbb{C})^{\Gamma_L}$ denotes the space of elements in $H^*(N_\infty/(N_\infty \cap \Gamma), \mathbb{C})$ which are invariant under the action of Γ_L. If k has a real embedding, that is, $s > 0$, the only Γ_L-invariant subspaces in $H^*(N_\infty/(N_\infty \cap \Gamma), \mathbb{C})$ are in degree 0 and m. If $s = 0$, it may happen that one finds Γ_L-invariant classes in degree t as well.

Notation and conventions

Let k be an algebraic number field, and let $\mathcal{O}_k$ denote its ring of integers. The set of places of k will be denoted by V_k, and $V_{k,\infty}$ (resp. $V_{k,f}$) refers to the subsets of archimedean (resp. non-archimedean) places of k. Given a place $v \in V_k$, the completion of k with respect to v is denoted by k_v. For a finite place $v \in V_{k,f}$ we write $\mathcal{O}_{k,v}$ for the valuation ring in k_v. If the field k is fixed, we write $V = V_k$ etc.

Suppose the extension $k/\mathbb{Q}$ has degree $m = [k:\mathbb{Q}]$. Let Σ be the set of distinct embeddings $\sigma_i : k \to \mathbb{C}$, $1 \le i \le m$. Among these embeddings some

factor through $k \to \mathbb{R}$. Let $\sigma_1, ..., \sigma_s$ denote these real embeddings $k \to \mathbb{R}$. Given one of the remaining embeddings $\sigma : k \to \mathbb{C}, \sigma(k) \not\subset \mathbb{R}$, to be called imaginary, there is the conjugate one $\bar{\sigma} : k \to \mathbb{C}$, defined by $x \mapsto \overline{\sigma(x)}$, where $\bar{z}$ denotes the usual complex conjugation of the complex number z. Then the number of imaginary embeddings is an even number, which we denote by $2t$. We number the $m = s + 2t$ embeddings $\sigma_i : k \to \mathbb{C}$, $i = 1, ..., m$ in such a way that, as above, σ_i is real for $1 \leq i \leq s$, and $\overline{\sigma}_{s+i} = \sigma_{s+i+t}$ for $1 \leq i \leq t$.

The set V_∞ of archimedean places of k is naturally identified with the set of embeddings $\{\sigma_i\}_{1 \leq i \leq s+t} \subset \Sigma$. We denote by σ_v the embedding which corresponds to $v \in V_{k,\infty}$.

Let $\mathbb{A}_k$ (resp. $\mathbb{I}_k$) be the ring of adèles (resp. the group of idèles) of k. We denote by $\mathbb{A}_{k,\infty} = \prod_{v \in V_{k,\infty}} k_v$ the archimedean component of the ring $\mathbb{A}_k$, and by $\mathbb{A}_{k,f}$ the finite adèles of k. There is the usual decomposition of $\mathbb{A}_k$ into the archimedean and the non-archimedean part $\mathbb{A} = \mathbb{A}_{k,\infty} \times \mathbb{A}_{k,f}$.

2. Reduction theory for the algebraic k-group SL_2

2.1. *The group SL_2.* Given an algebraic number field k, the group of k-rational points of the connected reductive k-algebraic group GL_2 coincides with the group $GL(2, k)$ of (2×2)-matrices with entries in k. The group $Z(k)$ of k-rational points of the centre Z of GL_2 is given by the group $Z(k) = \{g = \mathrm{diag}(\lambda, \lambda) \mid \lambda \in k^\times\}$ of scalar diagonal matrices. We fix the maximal k-split torus S in GL_2 given by

$$S(k) = \left\{ g = \left(\begin{smallmatrix} \lambda & 0 \\ 0 & \mu \end{smallmatrix}\right) \mid \lambda, \mu \in k^\times \right\}.$$

Let $\Phi_k = \Phi(GL_2, S) \subset X^*(S)$ be the set of roots of GL_2 with respect to S. A basis of Φ_k is given by the non-trivial character $\alpha : S/k \to \mathbb{G}_m/k$, defined by the assignment $\left(\begin{smallmatrix} \lambda & 0 \\ 0 & \mu \end{smallmatrix}\right) \mapsto \lambda\mu^{-1}$. We denote by Q_0 the minimal parabolic k-subgroup of GL_2 which is determined by $\{\alpha\}$. We have a Levi decomposition of Q_0 into the semi-direct product $Q_0 = SN_0$ of its unipotent radical N_0 by S.

The derived group of the general linear group GL_2 over k is the special linear k-group SL_2; it is a k-simple simply connected algebraic group of k-rank one. We fix the maximal k-split torus L_0 of SL_2, whose k-rational points are given by $L_0(k) = SL_2(k) \cap S(k)$, hence,

$$L_0(k) = \left\{ g = \left(\begin{smallmatrix} \lambda & 0 \\ 0 & \lambda^{-1} \end{smallmatrix}\right) \mid \lambda \in k^\times \right\}.$$

A basis for the set of roots for SL_2 with respect to L_0 is given by the restriction of α on L_0, denoted by the same letter. The minimal parabolic k-subgroup which corresponds to α is denoted by P_0 with Levi decomposition $P_0 = L_0N_0$ of its unipotent radical N_0 by L_0. We call P_0 the standard minimal parabolic subgroup of SL_2. Any minimal parabolic k-subgroup of SL_2 is k-conjugate under SL_2 to P_0, and we have a Levi decomposition $P = LN$.

2.2. *Reduction theory.* Given an algebraic number field k, we write G for the algebraic k-group SL_2. For every archimedean place $v \in V_{k,\infty}$, together with the corresponding embedding $\sigma_v : k \longrightarrow \overline{k}$, there are given a field $k_v = \mathbb{R}$ or $\mathbb{C}$ and a real Lie group $G_v = G^{\sigma_v}(k_v)$. The group

$$G_\infty = \prod_{v \in V_{k,\infty}} G_v, \tag{2.1}$$

viewed as the topological product of the groups G_v, $v \in V_{k,\infty}$, is isomorphic to the group of real points $(\mathrm{Res}_{k/\mathbb{Q}}G)(\mathbb{R})$ of the algebraic $\mathbb{Q}$-group $\mathrm{Res}_{k/\mathbb{Q}}G$ obtained from G by restriction of scalars. In G_∞, we identify $G(k)$ with the set of elements $(g^{\sigma_v})_{v \in V_{k,\infty}}$ where $g \in G(k)$. In an analogous way, if H is an algebraic k-subgroup of G, we denote by H_∞ the group of real points $(\mathrm{Res}_{k/\mathbb{Q}}H)(\mathbb{R})$ of the algebraic $\mathbb{Q}$-group $\mathrm{Res}_{k/\mathbb{Q}}H$.

We denote by s (resp. t) the number of real (resp. complex) places of k. Thus, the degree m of the extension $k/\mathbb{Q}$ equals $m = s + 2t$. Then the real Lie group G_∞ is given as the finite direct product

$$G_\infty \cong SL_2(\mathbb{R})^s \times SL_2(\mathbb{C})^t. \tag{2.2}$$

For each place $v \in V_{k,\infty}$, let X_v be the symmetric space associated with G_v, described as the space of maximal compact subgroups of G_v. In fact, all of these are conjugate to one another, thus, we may write $X_v = K_v \backslash G_v$ for any maximal compact subgroup $K_v \subset G_v$. If $v \in V_{k,\infty}$ is a real place, X_v is the hyperbolic 2-plane H^2, and, if $v \in V_{k,\infty}$ is a complex place, X_v is the hyperbolic 3-space H^3. Since X_v is diffeomorphic to $\mathbb{R}^{d(G_v)}$ where $d(G_v) = \dim G_v - \dim K_v$, the space X_v is contractible. We define

$$X_G := \prod_{v \in V_{k,\infty}} X_v \cong (\mathrm{H}^2)^s \times (\mathrm{H}^3)^t$$

as the product of the symmetric spaces X_v, and we let $d(G) = \sum_{v \in V_{k,\infty}} d(G_v)$. Since the real Lie group G_∞ acts properly from the right on X_G, a given arithmetic subgroup Γ of $G(k)$, being viewed as a discrete, thus closed subgroup of G_∞, acts properly on X_G as well. If Γ is torsion-free, the action of Γ on X_G is free, and the quotient X_G/Γ is a smooth manifold of dimension $d(G)$. There is a G_∞-invariant Riemannian metric on X_G. Given an arithmetic subgroup Γ of $G(k)$, we are interested in the homogenous space X_G/Γ. If Γ is torsion-free, the space X_G/Γ carries the structure of a Riemannian manifold of finite volume.

Since G_∞ is not compact and the k-group G is k-simple simply connected, the group G has the strong approximation property (see [7]). Therefore, $G(k)$ is dense in the locally compact group $G(\mathbb{A}_{k,f})$, or, equivalently, $G_\infty G(k)$ is dense in $G(\mathbb{A}_k)$.

Given any proper ideal $\mathfrak{a} \subset \mathcal{O}_k$ the corresponding principal congruence subgroup of level $\mathfrak{a}$ is defined by

$$\Gamma(\mathfrak{a}) := \ker(SL_2(\mathcal{O}_k) \longrightarrow SL_2(\mathcal{O}_k/\mathfrak{a})). \tag{2.3}$$

Using [11, Prop. 4.4.4], if for every prime number p, the ideal $\mathfrak{a}^{p-1}$ does not divide the principal ideal $p\mathcal{O}_k$ in $\mathcal{O}_k$, the arithmetic group $\Gamma(\mathfrak{a})$ is torsion-free. Therefore, for almost all choices of the ideal $\mathfrak{a}$ the group $\Gamma(\mathfrak{a})$ is torsion-free.

Let $\mathfrak{p}$ be a prime ideal in $\mathcal{O}_k$, and let $v_0 \in V_{k,f}$ be the corresponding non-archimedean place of k. Given a proper ideal $\mathfrak{a} \subset \mathcal{O}_k$ let $\nu_{\mathfrak{p}}(\mathfrak{a})$ be the maximal exponent e such that $\mathfrak{p}^e$ divides the ideal $\mathfrak{a}$. Thus, we have $\mathfrak{a}\mathcal{O}_{v_0} = \mathfrak{p}^{\nu_{\mathfrak{p}}(\mathfrak{a})}\mathcal{O}_{v_0}$. For each $v \in V_{k,f}$, the kernel $K_v(\mathfrak{a})$ of the natural homomorphism $G(\mathcal{O}_v) \longrightarrow G(\mathcal{O}_v/\mathfrak{a}\mathcal{O}_v)$ is an open compact subgroup of $G(\mathcal{O}_v)$. This implies that the direct product $K(\mathfrak{a}) := \prod_{v\in V_{k,f}} K_v(\mathfrak{a})$ is an open compact subgroup of $G(\mathbb{A}_{k,f})$, and we have $\Gamma(\mathfrak{a}) = G(k) \cap K(\mathfrak{a})$. Using the strong approximation property of the algebraic k-group G, we have the continuous map $G_\infty \longrightarrow K(\mathfrak{a})\backslash G(\mathbb{A}_k)/G(k)$, defined by $g \mapsto K(\mathfrak{a})gG(k)$. It gives rise to a homeomorphism $K(\mathfrak{a})\backslash G(\mathbb{A}_k)/G(k) \tilde{\longrightarrow} G_\infty/\Gamma(\mathfrak{a})$ which is equivariant under the action of G_∞.

2.3. *Reduction theory - the boundary components.* Since the k-rank of the algebraic k-group $G = SL_2$ is one, all proper parabolic k-subgroups of G are minimal, all of these are conjugate under $G(k)$. Given any arithmetic subgroup $\Gamma \subset G(k)$, this conjugacy class falls into finitely many Γ-conjugacy classes (see [1, Prop. 15.6]). In the case of the group $\Gamma = SL_2(\mathcal{O}_k)$, the cardinality of this set is equal to the class number h_k of k (see [13, Prop. 20]).

We consider the standard minimal parabolic k-subgroup $P_0 = L_0N_0$ of G. Any k-character $\chi : L_0 \longrightarrow \mathbb{G}_m$ induces a homomorphism

$$\chi_\infty : L_{0,\infty} \longrightarrow \mathbb{G}_{m,\infty} \cong (\mathbb{R}^\times)^s \times (\mathbb{C}^\times)^t.$$

Given an archimedean place $v \in V_{k,\infty}$, we denote by $|\cdot|_v$ the absolute value on $k_v = \mathbb{R}$ if v is real resp. the square of the absolute value on $k_v = \mathbb{C}$ if v is complex. The norm homomorphism is defined by

$$|\cdot| : \mathbb{G}_{m,\infty} \cong \prod_{v\in V_{k,\infty}} k_v^\times = (\mathbb{R}^\times)^s \times (\mathbb{C}^\times)^t \longrightarrow \mathbb{R}^\times_{>0}, \quad (g_v)_{v\in V_{k,\infty}} \mapsto \prod_{v\in V_{k,\infty}} |g_v|_v.$$

The compositum $|\cdot| \circ \chi$ can be canonically extended to a homomorphism $|\chi| : P_{0,\infty} \longrightarrow \mathbb{R}^\times_{>0}$. We apply this construction to the positive simple root $\alpha : L_0 \longrightarrow \mathbb{G}_m$, and, we define $P^{(1)}_{0,\infty} := \{p \in P_{0,\infty} \mid |\alpha|(p) = 1\}$. Given any point $x \in X_G$, let $K_x \subset G_\infty$ be the corresponding maximal compact subgroup of the Lie group G_∞, then $P^{(1)}_{0,\infty} \cap K_x = P_{0,\infty} \cap K_x$. Moreover, since the image of the arithmetic group Γ under α is an arithmetic subgroup of $\mathbb{G}_m(k)$, thus, contained in $\mathcal{O}_k^\times$, we have $|\alpha|(\gamma) = 1$ for every $\gamma \in P_{0,\infty} \cap \Gamma$. It follows that $P_{0,\infty} \cap \Gamma = P^{(1)}_{0,\infty} \cap \Gamma$. Given any other minimal parabolic subgroup P of G,

there is a $g \in G(k)$ such that $gP(k)g^{-1} = P_0(k)$. Therefore, we can define $P_\infty^{(1)}$ via conjugation.

In the specific case of the algebraic k-group G of k-rank one, the general results in [5, Sect. 1.2] in reduction theory take the following form; a different approach is carried through in [1, Thm. 17.10].

THEOREM 2.1. *Given a torsion-free arithmetic subgroup $\Gamma \subset G(k)$, there exists an open subset $Y_\Gamma \subset X_G/\Gamma$ such that its closure $\overline{Y}_\Gamma$ is a compact manifold with boundary $\partial\overline{Y}_\Gamma$, and the inclusion $\overline{Y}_\Gamma \longrightarrow X_G/\Gamma$ is a homotopy equivalence. The connected components of the boundary $\partial\overline{Y}_\Gamma$ are in one-to-one correspondence with the finite set, to be denoted $\mathcal{P}/\Gamma$, of Γ-conjugacy classes of minimal parabolic k-subgroups of G. If P is a representative for a Γ-conjugacy class of minimal parabolic k-subgroups of G, we denote the corresponding connected component in $\partial\overline{Y}_\Gamma$ by $Y^{[P]}$. Then we have as a disjoint union*

$$\partial\overline{Y}_\Gamma = \coprod_{[P]\in\mathcal{P}/\Gamma} Y^{[P]}.$$

and the boundary component $Y^{[P]}$ is diffeomorphic to the double coset space $(K \cap P_\infty^{(1)})\backslash P_\infty^{(1)}/(P_\infty^{(1)} \cap \Gamma)$ where $K \subset G_\infty$ is a maximal compact subgroup.

We are interested in the geometric structure of such a boundary component $Y^{[P]}$. The canonical morphism $P \longrightarrow P/N = L$ onto the maximal k-split torus L gives rise to a surjective morphism $p : P_\infty^{(1)} \longrightarrow L_\infty^{(1)}$. The image $K_L := p(K \cap P_\infty^{(1)})$ of $K \cap P_\infty^{(1)}$ under this projection is a maximal compact subgroup in $L_\infty^{(1)}$. We write $Z_L := K_L\backslash L_\infty^{(1)}$ for the associated manifold of right cosets. The preimage of a point in $L_\infty^{(1)}$ is diffeomorphic to N_∞.

The image Γ_L of $P_\infty^{(1)} \cap \Gamma$ under p is a discrete torsion-free subgroup of $L_\infty^{(1)}$. The group Γ_L acts properly and freely on Z_L, and the double coset space Z_L/Γ_L is a manifold with universal cover Z_L. The projection $p : P_\infty^{(1)} \longrightarrow L_\infty^{(1)}$ induces a surjection

$$\pi : (K \cap \Gamma)\backslash P_\infty^{(1)}/(P_\infty^{(1)} \cap \Gamma) \longrightarrow Z_L/\Gamma_L; \tag{2.4}$$

it is a locally trivial fibration whose fibre is $N_\infty/(N_\infty \cap \Gamma)$. This fibre is compact (see, e.g. [11, Sect. 9.3]).

PROPOSITION 2.2. *Given a representative P for a Γ-conjugacy class of minimal parabolic k-subgroups of G, the corresponding boundary component $Y^{[P]} \cong (K \cap P_\infty^{(1)})\backslash P_\infty^{(1)}/(P_\infty^{(1)} \cap \Gamma)$ admits the structure of a fibre bundle which is equivalent to the fibre bundle*

$$(Z_L \times_{\Gamma_L} N_\infty/(N_\infty \cap \Gamma), Z_L, N_\infty/(N_\infty \cap \Gamma)). \tag{2.5}$$

This bundle is associated by the natural action of Γ_L on the compact fibre $N_\infty/(N_\infty \cap \Gamma)$, induced by inner automorphisms, to the universal covering $Z_L \longrightarrow Z_L/\Gamma_L$.

PROOF. The action of the group $P_\infty^{(1)} \cap \Gamma$ on $K_L \backslash P_\infty^{(1)}$ is proper and free. Since P is the normaliser of N in G, the group $N_\infty \cap \Gamma$ is a normal subgroup in $P_\infty^{(1)} \cap \Gamma$. Therefore, the quotient group $\Gamma_{P/N} := (P_\infty^{(1)} \cap \Gamma)/(N_\infty \cap \Gamma)$ acts properly and freely on $K_L \backslash P_\infty^{(1)}/(N_\infty \cap \Gamma)$. In view of the decomposition $P_\infty^{(1)} = L_\infty^{(1)} N_\infty$ as a semi-direct product, induced by the semi-direct product $P = LN$, this space can be viewed as the product space

$$K_L \backslash P_\infty^{(1)}/(N_\infty \cap \Gamma) \tilde{\longrightarrow} K_L \backslash L_\infty^{(1)}/(N_\infty \cap \Gamma) \times N_\infty/(N_\infty \cap \Gamma). \tag{2.6}$$

We have that P is the normaliser of N, thus, the group $P_\infty^{(1)} \cap \Gamma$ acts via inner automorphisms on N_∞. It follows, since N is commutative, that there is an induced action of the quotient group $\Gamma_{P/N}$ via diffeomorphisms on the space $N_\infty/(N_\infty \cap \Gamma)$. The group $\Gamma_{P/N}$ is isomorphic to Γ_L. In view of (2.6), the fibration in question is equivalent to the fibre bundle

$$(Z_L \times_{\Gamma_L} N_\infty/(N_\infty \cap \Gamma), Z_L, N_\infty/(N_\infty \cap \Gamma)) \tag{2.7}$$

which is associated by the natural action of Γ_L on $N_\infty/(N_\infty \cap \Gamma)$, induced by inner automorphisms, to the universal covering $Z_L \longrightarrow Z_L/\Gamma_L$. □

2.4. *The geometric structure of the boundary components.* Let Γ be a torsion-free arithmetic subgroup of $G(k) = SL_2(k)$. Given a representative P for a Γ-conjugacy class of minimal parabolic k-subgroups of G we seek to understand the base space and the fibre of the fibre bundle structure of the boundary component $Y^{[P]}$ of $\partial \overline{Y}_\Gamma$. For any natural number $n > 0$, we denote by $T^n = (S^1)^n$ the n-dimensional torus.

THEOREM 2.3. *The boundary component $Y^{[P]} = Z_L \times_{\Gamma_L} N_\infty/(N_\infty \cap \Gamma)$ is the total space of a fibre bundle with fibre $N_\infty/(N_\infty \cap \Gamma)) \cong T^m$, base space $Z_L/\Gamma_L \cong T^{s+t-1}$, and structure group Γ_L. Hence it is a torus bundle over a torus. The structure group Γ_L of the fibre bundle is a totally disconnected commutative group.*

PROOF. First, with regard to the fibre $N_\infty/(N_\infty \cap \Gamma)$, we may assume that P is the standard minimal parabolic k-subgroup $P_0 = L_0 N_0$ whose group of k-points is $P_0(k) = \left\{ g = \left(\begin{smallmatrix} x & y \\ 0 & x^{-1} \end{smallmatrix}\right) \mid x \in k^\times, y \in k \right\}$. The group of k-points of its unipotent radical is commutative, and, since $m = s + 2t$ we obtain as additive groups

$$N_{0,\infty} \cong \mathrm{Res}_{k/\mathbb{Q}}(k_a)(\mathbb{R}) \cong \mathbb{R}^m$$

The group $N_{0,\infty} \cap \Gamma$ as a discrete subgroup of $N_{0,\infty}$ forms a complete lattice in $\mathbb{R}^m$, thus the claim follows.

Second, we deal with the universal cover $Z_L := K_L \backslash L_\infty^{(1)}$ of the base space Z_L/Γ_L of the fibration (2.4). We may assume that $P = P_0$ is the standard minimal parabolic k-subgroup of G. We have the identification

$$L_{0,\infty} = \left\{(g_v)_v = \left(\begin{smallmatrix}(t_v)_v & 0\\ 0 & (t_v)_v^{-1}\end{smallmatrix}\right) \mid t_v \in \mathbb{R}^\times \text{ if } v \text{ real},\ t_v \in \mathbb{C}^\times \text{ if } v \text{ complex}\right\} \xrightarrow{\sim} (\mathbb{R}^\times)^s \times (\mathbb{C}^\times)^t,$$

where $v \in V_{k,\infty}$ ranges ovre the archimedean places of k. Passing over to the group $L_{0,\infty}^{(1)}$, we obtain a diffeomorphism

$$L_{0,\infty}^{(1)} \xrightarrow{\sim} \left\{(g_v)_v = \left(\begin{smallmatrix}(t_v)_v & 0\\ 0 & (t_v)_v^{-1}\end{smallmatrix}\right) \mid t_v \in k_v^\times,\ \prod_{v\in V_{k,\infty}} |t_v|_v = 1\right\}.$$

Recall that, given an archimedean place $v \in V_{k,\infty}$, we denote by $|\cdot|_v$ the absolute value on $k_v = \mathbb{R}$ if v is real resp. the square of the absolute value on $k_v = \mathbb{C}$ if v is complex.

The assignement $(x_1, \dots, x_s, z_1, \dots, z_t) \mapsto (|x_1|, \dots, |x_s|, |z_1|^2, \dots, |z_t|^2)$ defines a surjective homomorphism $L_{0,\infty} = (\mathbb{R}^\times)^s \times (\mathbb{C}^\times)^t. \longrightarrow (\mathbb{R}_{>0}^\times)^{s+t}$. It gives rise to a surjective homomorphism

$$\psi^{(1)} : L_{0,\infty}^{(1)} \cong ((\mathbb{R}^\times)^s \times (\mathbb{C}^\times)^t)^{(1)} \longrightarrow ((\mathbb{R}_{>0}^\times)^{s+t})^{(1)}$$

where

$$((\mathbb{R}^\times)^s \times (\mathbb{C}^\times)^t)^{(1)} := \{(h_v)_{v\in V_{k,\infty}} \in ((\mathbb{R}^\times)^s \times (\mathbb{C}^\times)^t) | \prod_{v\in V_{k,\infty}} |h_v|_v = 1\},$$

and $((\mathbb{R}_{>0}^\times)^s)^{(1)}$ is accordingly defined as

$$((\mathbb{R}_{>0}^\times)^s)^{(1)} := \{(x_v)_{v\in V_{k,\infty}} \in (\mathbb{R}_{>0}^\times)^{s+t} | \prod_{v\in V_{k,\infty}} x_v = 1\}$$

.

We summarise the aforesaid considerations in the diagram

$$\begin{array}{ccccccc} L_\infty^{(1)} & \longrightarrow & (\prod_{v\in V_{k,\infty}} k_v^\times)^{(1)} & \xrightarrow{\psi^{(1)}} & (\prod_{v\in V_{k,\infty}} \mathbb{R}_{>0}^\times)^{(1)} & \xrightarrow{\mathrm{Log}^{(1)}} & \mathcal{H} \\ \downarrow & & \downarrow & & \downarrow & & \downarrow \\ L_\infty & \longrightarrow & (\prod_{v\in V_{k,\infty}} k_v^\times) & \xrightarrow{\psi} & (\prod_{v\in V_{k,\infty}} \mathbb{R}_{>0}^\times) & \xrightarrow{\mathrm{Log}} & \mathbb{R}^{s+t}, \end{array}$$

where the map $\mathrm{Log} : (\prod_{v\in V_{k,\infty}} \mathbb{R}_{>0}^\times) \longrightarrow \mathbb{R}^{s+t}$ is defined by the assignment $(x_1, \dots, x_{s+t}) \mapsto (\log x_1, \dots, \log x_{s+t})$, where $\mathcal{H}$ denotes the hypersurface $\mathcal{H} := \{r = (r_i) \in \mathbb{R}^{s+t} \mid \sum_i r_i = 0\}$ in $\mathbb{R}^{s+t}$, and where the vertical arrows are the natural inclusions. The map $\psi^{(1)}$ resp. $\mathrm{Log}^{(1)}$ is obtained via

restriction from the map ψ resp. Log. The horizontal arrows in both exterior squares of the diagram are isomorphisms. The kernel of $\psi^{(1)}$ is the unique maximal compact subgroup in $((\mathbb{R}^\times)^s \times (\mathbb{C}^\times)^t)^{(1)}$, given as the product of s copies of $\{\pm 1\}$ and t copies of S^1. We obtain $\ker(\psi^{(1)}) = K_L$. It follows that $Z_L = K_L \backslash L^{(1)}_{0,\infty} \cong \mathbb{R}^{s+t-1}$.

By assumption the arithmetic group $\Gamma \subset SL_2(\mathcal{O}_k)$ is torsion-free. It follows, since $\ker \psi^{(1)}$ is compact, $\Gamma_L \cap \ker \psi^{(1)} = \{0\}$. Therefore, $\psi^{(1)}$ maps Γ_L isomorphically onto a discrete torsion-free subgroup of $(\prod_{v \in V_{k,\infty}} \mathbb{R}^\times_{>0})^{(1)}$. The arithmetic group Γ_L may be viewed as a sugbroup of $\mathcal{O}_k^\times$. As worked out in the usual proof of the Dirichlet theorem on the unit groups of number fields (see, e.g., [3]), in our context of the diagram, the map induced by the inclusion $\mathcal{O}_k^\times \longrightarrow L_0(k)$, maps $\mathcal{O}_k^\times$ isomophically onto a complete lattice in the hyperplane $\mathcal{H}$. Therefore, $(\mathrm{Log}^{(1)} \circ \psi^{(1)})(\Gamma_L)$ is a complete lattice in $\mathcal{H}$. It follows that the base space Z_L/Γ_L of the fibre bundle is the torus T^{s+t-1}. □

Remark 2.4. Given a totally real quadratic number field, we are concerned with Hilbert modular surfaces as dealt with in [6]. In this case the boundary components $Y^{[P]}$ occur in the disguise of boundaries of neighbourhoods of cusp singularities.

3. Torus bundles over tori

In order to determine the cohomology of a boundary component $Y^{[P]}$ it is useful to describe an inductive construction of fibre bundles whose fibre is a torus T^m and whose basis is a torus T^r, and whose structure group is the group $SL_m(\mathbb{Z})$ of automorphisms of the free $\mathbb{Z}$-module $\mathbb{Z}^m$ of determinant one.

First, using [15, Chap. 18], in particular, the notions and notations introduced there, we recall the classification of fibre bundles over the 1-sphere. Let (E, S^1, F, π) be a fibre bundle over S^1 with totally disconnected structure group G. Up to equivalence, this bundle is in normal form. Thus we can describe it in the following way: we cut the 1-sphere S^1 into two (closed) hemispheres E_1 and E_2 whose intersection consists of exactly two antipodal points x_0 and x_1 in S^1. Then we can choose two open neighbourhoods $V_1, V_2 \subset S^1$ such that $E_i \subset V_i, i = 1, 2$, and such that the change of coordinates g_{12} satisfies $g_{12}(x_0) = e \in G$. Then the group element $g_{12}(x_1) \in G$ describes the gluing process of the fibre over the point x_1; this element is called the characteristic homeomorphism of the given bundle. By [15, 18.3], two fibre bundles (E, S^1, F, π) and (E', S^1, F, π') over S^1 with characteristic homeomorphisms A and A' whose fibre F and structure group G coincide are equivalent if and only if there are an element $g \in G$ and a path $\omega : I \longrightarrow G$

in G such that $\omega(0) = A$ and $\omega(1) = gA'g^{-1}$. Since G is totally disconnected the characteristic homeomorphism is determined by a suitable chosen generator of the fundamental group $\pi_1(S^1)$. The bundle is equivalent to the bundle $((I \times F)/\sim, S^1, F, p)$ where the equivalence relation $\sim$ is given by $(1, x) \sim (0, Ax), x \in F$, and the projection map $p : (I \times F)/\sim \longrightarrow I/(1 \sim 0)$ is defined by the assignment $(t, x) \mapsto t, t \in I, x \in F$.

Second, let $\mathsf{A} := \{A_1, A_2, \ldots, A_r\}$ be a subset of elements in $SL_m(\mathbb{Z})$ which commute with one another. We inductively construct, following [9], fibre bundles $T(A_1, \ldots, A_i)$, $1 \leq i \leq r$, over $T^i = \mathbb{R}^i/\mathbb{Z}^i$ with fibre T^m and structure group $SL_m(\mathbb{Z})$. The matrices A_i, $1 \leq i \leq r$, induce homeomorphisms of T^m which will also be denoted by A_i.

We set $T(A_1) = (I \times T^m)/\sim$, where $(1, x) \sim (0, A_1x)$, $x \in T^m$, and the projection $\pi : T(A_1) \longrightarrow S^1$ is given by $(t, x) \mapsto t$. The matrices $A_i, 1 < i \leq r$, act on $T(A_1)$ via $(t, x) \mapsto (t, A_ix)$ in a natural way.

Suppose that the torus bundle $(T(A_1, \ldots, A_k), T^k, T^m, \pi_k)$ is constructed, and the matrices A_i with $k + 1 \leq i \leq r$ act on $T(A_1, \ldots, A_k)$. We define

$$T(A_1, \ldots, A_{k+1}) = (I \times T(A_1, \ldots, A_k))/\sim$$

where $(1, y) \sim (0, A_{k+1}y)$, $y \in T(A_1, \ldots, A_k)$, and the projection

$$\pi_{k+1} : T(A_1, \ldots, A_{k+1}) \longrightarrow S^1 \times T^k = T^{k+1}$$

is given by the assignment $(t, y) \mapsto (t, \pi_k(y))$. The matrices $A_{k+2}, \ldots, A_r$ act on $T(A_1, \ldots, A_{k+1})$ via $(t, y) \mapsto (t, A_iy)$, $k + 2 \leq i \leq r$. Since the matrices $A_1, A_2, \ldots, A_r$ commute with one another, this is well defined. The total space is endowed with the orientations induced by the canonical orientations on $\mathbb{R}^m$ and $\mathbb{R}^j$. One checks by induction that the induced action of the matrix A_j, $j > k$, on the bundle is fibrewise.

For the sake of completeness we note the fact that this construction exhausts up to equivalence all torus bundles over tori T^r with structure group $SL_m(\mathbb{Z})$. Via induction one proves (see [9, Thm. 4.3]) the following result.

PROPOSITION 3.1. *Let (E, T^r, T^m, ρ) be a torus bundle over the torus T^r with structure group $SL_m(\mathbb{Z})$. Then this bundle is equivalent to the bundle*

$$(\mathbb{R}^r \times_{\pi_1(T^r)} T^m, T^r, T^m, \pi)$$

associated to the universal covering $\mathbb{R}^r \longrightarrow \mathbb{R}^r/\mathbb{Z}^r$ by the natural action of the fundamental group of the basis on the fibre T^m where $\pi_1(T^r) = \mathbb{Z}^r$ acts on $\mathbb{R}^r$ via right translations. If we denote by $A_1, A_2, \ldots, A_r$ elements in $SL_m(\mathbb{Z})$ which correspond to the action of suitably chosen generators of the fundamental group $\pi_1(T^r)$ then the bundle $T(A_1, A_2, \ldots, A_r)$ is equivalent to the bundle $(\mathbb{R}^r \times_{\pi_1(T^r)} T^m, T^r, T^m, \pi)$. The matrices $A_1, A_2, \ldots, A_r$ are uniquely determined up to conjugation in $SL_m(\mathbb{Z})$.

4. Digression: semi-simple endomorphisms

We review some basic facts regarding semi-simple endomorphisms of finite-dimensional vector spaces over a field K. This notion plays a conclusive role in the actual computation of the cohomology of torus bundles over tori. This allows us to determine the cohomology of a boundary component.

Definition 4.1. *Let V be a finite-dimensional vector space over a field K. We call an endomorphism $\alpha \in \mathrm{End}_K(V)$ semi-simple if every α-stable subspace $U \subset V$, that is, $\alpha U \subset U$, has a complementary α-stable subspace. In other words, equivalently, V viewed as a $K[X]$-module, with X acting as α, is semi-simple.*

By the classification of finitely generated modules over the polynomial ring $K[X]$, such a V is isomorphic to a direct sum of modules of the form $k[X]/(f^m)$ where $f \in K[X]$ is some irreducible polynomial. Therefore V is semi-simple if and only if each of these direct summands is semi-simple, that is, $m = 1$. It follows that an endomorphism $\alpha \in \mathrm{End}_K(V)$ is semi-simple if and only if its minimum polynomial is the product of relatively prime irreducible polynomials.

The semi-simplicity of an endomorphism $\alpha \in \mathrm{End}_K(V)$ is preserved by passage to an α-invariant K-subspace $W \subset V$, as well as to the quotient space V/W.

The following technical observation is useful. Let V, W be two finite-dimensional vector spaces over a field K. In view of the isomorphism

$$\mathrm{End}_K(V) \otimes_K \mathrm{End}_K(W) \xrightarrow{\sim} \mathrm{End}_K(V \otimes_K W),$$

given an endomorphism $\omega \in \mathrm{End}_K(V \otimes_K W)$, there exist $\phi_i \in \mathrm{End}_K(V)$, $\psi_j \in \mathrm{End}_K(W)$ such that $\omega = \sum \phi_i \otimes \psi_j$. A straightforward argument shows: if $\phi \in \mathrm{End}_K(V)$, $\psi \in \mathrm{End}_K(W)$ are semi-simple endomorphisms, then the endomorphism $\omega = \phi \otimes \psi \in \mathrm{End}_K(V \otimes_K W)$ is semi-simple.

Let L/K be a field extension. Given an endomorphism $\alpha \in \mathrm{End}_K(V)$, let $\alpha_L := \mathrm{id} \otimes \alpha \in \mathrm{End}_L(V_L)$ be the endomorphism of $V_L := L \otimes_K V$ induced by extension of scalars. If α_L is semi-simple, then α is also semi-simple, and if L/K is separable, then the converse is correct.

We observe the following result (see [2, Chap. VII, §5, No. 8, Prop. 15]):

Proposition 4.2. *Given an endomoprhism $\alpha \in \mathrm{End}_K(V)$ with minimum polynomial $m_\alpha \in K[X]$, the following assertions are equivalent:*

- *For every field extension L/K, the endomorphism α_L is semi-simple.*
- *There exists a field extension L/K such that the endomorphism α_L is diagonalisable.*
- *The minimum polynomial m_α is separable over K.*

Definition 4.3. *An endomorphism $\alpha \in \mathrm{End}_K(V)$ is called absolutely semi-simple if one of the equivalent conditions in Proposition 4.2 is valid.*

Clearly, a necessary and sufficient condition for α to be absolutely semi-simple is that the irreducible factors of the minimum polynomial m_α have no multiple roots in the algebraic closure $\bar{K}$ of K.

More generally, we consider a family $\mathcal{A}$ of K-endomorphisms of a given finite-dimensional K-vector space V. We say that the family $\mathcal{A}$ is diagonalisable if there exists a basis $\mathsf{v} = \{v_i\}_{i\in I}$ of V such that the matrix $M_{\alpha,\mathsf{v}}$ for each $\alpha \in \mathcal{A}$ with respect to v has diagonal form. If $\mathcal{A} = \{\alpha\}$ consists of a single element, we say that α is diagonalisable.

The following observation is decisive for the subsequent result: Let $\alpha, \beta \in \mathrm{End}_K(V)$ be two endomorphisms of V which commute with one another, and let V_λ be any eigenspace for α. Then, for all $v \in V_\lambda$, we have $\alpha(\beta(v)) = \beta(\alpha(v)) = \beta(\lambda v) = \lambda\beta(v)$. Thus, V_λ is stable under β.

PROPOSITION 4.4. *Let $\mathcal{A}$ be a family of K-endomorphisms of a given finite-dimensional K-vector space V. Then $\mathcal{A}$ is diagonalisable if and only if all elements in $\mathcal{A}$ are diagonalisable and commute with one another.*

Combining this result with the characterisations of an absolutely semi-simple endomorphism in Proposition 4.2 we obtain

PROPOSITION 4.5. *Let $\mathcal{A}$ be a family of K-endomorphisms of a given finite-dimensional K-vector space V. There exists a field extension L/K such that the set $\mathcal{A}_L := \{\alpha_L \mid \alpha \in \mathcal{A}\} \subset \mathrm{End}_L(V_L)$ is diagonalisable if and only if the endomorphisms in $\mathcal{A}$ are absolutely semi-simple and commute with one another.*

PROPOSITION 4.6. *Let V be a finite-dimensional vector space over a field K. Let $\mathcal{A} = \{\phi_a\}$ be a finite family of semi-simple endomorphisms $\phi_a \in \mathrm{End}_K(V)$ which commute pairwise with one another. We denote by A the subalgebra of the endomorphism algebra $\mathrm{End}_K(V)$ generated by $\mathcal{A}$ and the identity Id_V. Then V decomposes as a direct sum $V = V^A \oplus U$ into the subspace $V^A = \{v \in V \mid \phi(v) = v \text{ for all } \phi \in A\}$ and a complementary subspace U.*

PROOF. The proof proceeds by induction over the number of generators of A. The case of a single generator is taken care by the very definition of a semi-simple endomorphism. Let A be generated by the set $\{\phi_1, \ldots, \phi_n, \mathrm{Id}_V\} \subset \mathcal{A}$, and let A' be the subalgebra of $\mathrm{End}_K(V)$ generated by $\phi_1, \ldots, \phi_{n-1}$ and Id_V. By induction hypothesis, the subspace $V^{A'}$ admits a direct complement U' such that $V = V^{A'} \oplus U'$. Since for all $1 \le i \le n-1$, $\phi_n \circ \phi_i = \phi_i \circ \phi_n$, the restriction of ϕ_n to $V^{A'}$ is well defined and $(\phi_n)_{|V^{A'}}$ is semi-simple. Thus, there exists a direct complement U'' of V^A in $V^{A'}$. We put $U := U'' \oplus U'$. Then we have $V = V^A \oplus U$. ∎

COROLLARY 4.7. *Let V be a finite-dimensional vector space over a field K. Given an absolutely semi-simple endomorphism $\phi \in \mathrm{End}_K(V)$, there is a canonical identification* $\ker(\phi - \mathrm{Id}) \tilde{\longrightarrow} \mathrm{coker}(\phi - \mathrm{Id})$.

PROOF. Setting $V^\phi = \{v \in V \mid \phi(v) = v\}$, since ϕ is absolutely semi-simple, we have the direct sum decomposition $V = V^\phi \oplus U$ where $U = \mathrm{im}(\phi - \mathrm{Id})$. This implies the assertion. □

To be in the position to determine the cohomology of torus bundles over tori as constructed above we determine the cohomology ring of an n-torus.

Let R be a commutative ring with identity element, and let $\{a_1, \ldots, a_n\}$ be a finite set of n symbols. We write $\mathsf{I} = \{1, \ldots, n\}$. Then the exterior algebra $\bigwedge_R[a_1, \ldots, a_n]$ is defined as the free R-module with generators $a_{i_1} \cdots a_{i_k}$, for all k-tuples $(i_1, \ldots . i_k)$ of indices in I with $i_1 < \ldots < i_k$, $1 \leq k \leq n$, endowed with the associative and distributive multiplication determined by the rules $a_i^2 = 0, i = 1, \ldots, n$, and $a_i a_j - a_j a_i = 0$ if $i \neq j$, $i, j = 1, \ldots, n$. If we put $\bigwedge_R^0[a_1, \ldots, a_n] := R$, then $\bigwedge_R^*[a_1, \ldots, a_n]$ becomes a graded commutative ring with the scalar 1 as unit element. For a fixed index p, $1 \leq p \leq n$, $\bigwedge_R^p[a_1, \ldots, a_n]$ denotes the free R-submodule with basis $a_{i_1} \cdots a_{i_p}$ for all $i_1 < \ldots < i_p$. The generators $a_1, \ldots, a_n$ have degree one. The R-rank of $\bigwedge_R^p[a_1, \ldots, a_n]$ is $\binom{n}{p}$.

If $R = \mathbb{Z}$, we identify the elements $a_1, \ldots, a_n$ with the standard basis $e_1, \ldots, e_n$ of the free $\mathbb{Z}$-module $\mathbb{Z}^n$, and we write $\Lambda^*(\mathbb{Z}^n)$ for the corresponding exterior algebra.

PROPOSITION 4.8. *Given the n-dimensional torus T^n its cohomology ring with coefficients in any commutative field R is given as the exterior algebra $H^*(T^n, R) = \bigwedge_R[a_1, \ldots, a_n]$.*

PROOF. The cohomology of the sphere S^1 is $R[a]/(a^2)$ as a ring, and the underlying cohomology group is free. We view the n-torus T^n as the n-fold product of the sphere S^1. Then the Künneth formula [14, VI, 12.16] yields that the cohomology of T^n is the graded tensor product of n copies of $R[a]/(a^2)$. Therefore we obtain $H^*(T^n, R) = \bigwedge_R[a_1, \ldots, a_n]$. □

COROLLARY 4.9. *An endomorphism $A \in End_{\mathbb{Z}}(\mathbb{Z}^n)$ of the free $\mathbb{Z}$-module $\mathbb{Z}^n$ induces a unique map $A : T^n = \mathbb{R}^n/\mathbb{Z}^n \longrightarrow T^n = \mathbb{R}^n/\mathbb{Z}^n$. Then the ring homomorphism $A^* : H^*(T^n, R) \longrightarrow H^*(T^n, R)$ induced on the cohomology ring $H^*(T^n, R)$ coincides with the unique extension of A to a homomorphism $\Lambda^*(A)$ on the exterior algebra $\Lambda^*(R^n)$ with $\Lambda^*(A)(1) = 1$.*

5. The cohomology of a boundary component

The boundary component $Y^{[P]}$ in X_G/Γ attached to a Γ-conjugacy class of minimal parabolic k-subgroups of G has, up to equivalence, the structure

of the fibre bundle

$$(Z_L \times_{\Gamma_L} N_\infty/(N_\infty \cap \Gamma), Z_L/\Gamma_L, N_\infty/(N_\infty \cap \Gamma)) \tag{5.1}$$

associated by the natural action of Γ_L on the compact fibre $N_\infty/(N_\infty \cap \Gamma)$, induced by inner automorphisms, to the universal covering $Z_L \longrightarrow Z_L/\Gamma_L$. This fibre bundle with fibre $N_\infty/(N_\infty \cap \Gamma) \cong T^m$, where $m = s + 2t$ is the degree of the extension $k/\mathbb{Q}$, and base space $Z_L/\Gamma_L \cong T^r$, where $r = s+t-1$ is the $\mathbb{Z}$-rank of the unit group $\mathcal{O}_k^\times$ of the underlying algebraic number field k. We will see that this fibre bundle falls into the realm of torus bundles over tori with structure group $SL_m(\mathbb{Z})$ discussed in Section 3.

The action of the fundamental group Γ_L on $N_\infty/(N_\infty \cap \Gamma)$ extends to an action on the cohomology $H^*(N_\infty/(N_\infty \cap \Gamma), \mathbb{C})$ of the fibre. This gives rise to a local coefficient system, to be denoted $\mathsf{H}^*(F_b, \mathbb{C})$ on the pathwise connected base space $B = Z_L/\Gamma_L$. Here $F_b \cong N_\infty/(N_\infty \cap \Gamma)$ denotes the fibre over $b \in B$.

THEOREM 5.1. *Let P be a representative for a Γ-conjugacy class of minimal parabolic k-subgroups of G. The cohomology of the corresponding boundary component $Y^{[P]}$ is given as*

$$H^*(Y^{[P]}, \mathbb{C}) \cong H^*(Z_L/\Gamma_L, \mathsf{H}^*(F_b, \mathbb{C})) \cong H^*(Z_L/\Gamma_L, \mathbb{C}) \otimes H^*(N_\infty/(N_\infty \cap \Gamma), \mathbb{C})^{\Gamma_L}, \tag{5.2}$$

where $H^*(N_\infty/(N_\infty \cap \Gamma), \mathbb{C})^{\Gamma_L}$ denotes the space of elements in the cohomology $H^*(N_\infty/(N_\infty \cap \Gamma), \mathbb{C})$ which are invariant under Γ_L.

PROOF. We may assume that $P = P_0$ is the standard minimal parabolic k-subgroup. The k-rational points of its unipotent radical are given by $N_0(k) = \left\{ g = \left(\begin{smallmatrix} 0 & x \\ 0 & 0 \end{smallmatrix}\right) \mid x \in k \right\}$. Moreover, upon identifying $N_0(k)$ with k, we see that $N_0(k) \cap \Gamma = \Delta$ is a complete $\mathbb{Z}$-lattice in k. Passing over to the real points of the group $\mathrm{Res}_{k/\mathbb{Q}}(N_0)$, we obtain $N_{0,\infty} \cong \prod_{v \in V_{k,\infty}} k_v$. Therefore, the underlying structure as a vector space over $\mathbb{R}$, endowed with the Euclidean topology, is $N_{0,\infty}^+ \cong \prod_{v \in V_{k,\infty}} k_v \cong \mathbb{R}^m$. The group $N_{0,\infty}^+ \cap \Gamma$ is a discrete subgroup of maximal rank in $N_{0,\infty}^+ \cong \mathbb{R}^m$. It follows that $N_{0,\infty}^+ \cap \Gamma$ is freely generated over $\mathbb{Z}$ by m vectors $u_1, \ldots, u_m$ which are linearly independent over $\mathbb{R}$. We fix such a basis $\mathsf{u} = \{u_1, \ldots, u_m\}$ of $\mathbb{R}^m$. With regard to the basis u, the action of $N_{0,\infty}^+ \cap \Gamma$ on $N_{0,\infty}^+ \cong \mathbb{R}^m$ is the standard action of $\mathbb{Z}^m$ on $\mathbb{R}^m$.

It follows that we can describe the action of the fundamental group Γ_L on the fibre $N_{0,\infty}/(N_{0,\infty} \cap \Gamma)$ in terms of matrices with integral entries. It is induced by the operation of Γ_L on $N_{0,\infty}$ via inner automorphisms. The group Γ_L is a subgroup of the unit group $\mathcal{O}_k^\times$, hence, viewed as a finitely generated $\mathbb{Z}$-module, it is of rank $s + t - 1$. Given a set $\{\alpha_1, \ldots, \alpha_{s+t-1}\}$ of generators, each of them acts on $N_{0,\infty} \cong \mathbb{R}^m$ with respect to the basis u by an integral

matrix $A_i \in GL_m(\mathbb{Z})$, $i = 1, \ldots, s+t-1$, since α_i leaves $N_{0,\infty} \cap \Gamma$ invariant. Since Γ_L is commutative, the matrices A_i, $i = 1, \ldots, s+t-1$,, commute with one another.

We view Γ_L via the diagonal embedding $\mathcal{O}_k^\times \longrightarrow \prod_{v \in V_{k,\infty}} k_v^\times$ as a subgroup of $k_\infty^\times$. Then the action of an element $\epsilon \in \Gamma_L$ is given as a matrix over $\mathbb{C}$ with respect to a suitable basis by a diagonal form $\mathrm{diag}(\epsilon_{(1)}^2, \ldots, \epsilon_{(m)}^2)$ where $\epsilon_{(j)}$ denotes the j-th component of $\epsilon \in k_\infty^\times$. Since $\epsilon \in \Gamma_L \subset \mathcal{O}_k^\times$ is a unit, the determinant of this matrix is one. Therefore, ϵ acts orientation-preserving on the fibre $N_{0,\infty}/(N_{0,\infty} \cap \Gamma)$. In addition, the endomorphisms induced by generators of Γ_L are semi-simple endomorphisms.

Following the construction (and notation) introduced in Section 3, we have to determine the cohomology of a torus bundle $T(A_1, \ldots, A_r)$, where $r := s + t - 1$, with fibre T^m and basis T^r, determined by integral matrices $A_i \in SL_m(\mathbb{Z})$, $i = 1, \ldots, r$. We proceed by induction over the dimension r of the basis.

A decisive tool in the argument is the Wang sequence in cohomology for fibre bundles over the 1-sphere (see [8, Lemma 8.4.] or [14, Chap. 8, Sect. 5, Cor. 6]). It relates the cohomology of the total space to the cohomology of the fibre, accentuating the role of the characteristic homeomorphism.

PROPOSITION 5.2. *Let (E, S^1, F, π) be a fibre bundle over S^1 with totally disconnected structure group G and characteristic homeomorphism $A \in G$. Then there is an exact sequence*

(5.3)
$$\longrightarrow H^q(E,R) \xrightarrow{j^*} H^q(F,R) \xrightarrow{A^*-\mathrm{Id}} H^q(F,R) \xrightarrow{\delta^*} H^{q+1}(E,R) \longrightarrow$$

of cohomology groups where the coefficients are in any field R. The map $j : F \longrightarrow E$ is the natural inclusion, and δ^* is induced by the boundary operator in a Mayer-Vietoris Sequence attached to a suitable excisive couple of subsets of E. The endomorphism $H^q(F,R) \longrightarrow H^q(F,R)$ is given by $A^* - \mathrm{Id}$.

As an application to our case of interest this result has the following consequence:

COROLLARY 5.3. *Let (E, S^1, F, π) be a fibre bundle over S^1 with totally disconnected structure group G and characteristic homeomorphism $A \in G$. Suppose that the endomorphism $H^*(A) = A^* : H^*(F,\mathbb{Q}) \longrightarrow H^*(F,\mathbb{Q})$ induced by A is semi-simple, then we have*

$$H^n(E,\mathbb{Q}) = \bigoplus_{p+q=n} H^p(S^1,\mathbb{Q}) \otimes H^q(F,\mathbb{Q})^{A^*} \tag{5.4}$$

where $H^q(F,\mathbb{Q})^{A^*}$ denotes the subspace of elements in $H^q(F,\mathbb{Q})$ invariant under the endomorphism A^*.

Choose a prime ℓ so that the endomorphism $A^* : H^*(F, \mathbb{Z}_\ell) \longrightarrow H^*(F, \mathbb{Z}_\ell)$ induced by A is semi-simple. Then the analogous result is correct for the cohomology $H^n(E, \mathbb{Z}_\ell)$ with coefficients in the finite field $\mathbb{Z}_\ell$.

PROOF. We simultaneously prove both results, and we accordingly write R for the field of coefficients. We may assume that the given bundle is of the form $((I \times F)/\sim, S^1, F, p)$ where the equivalence relation $\sim$ is given by $(1, x) \sim (0, Ax), x \in F$, and the projection $p' : (I \times F)/\sim \to I/(1 \sim 0)$ is defined by the assignment $(t, x) \mapsto t, t \in I, x \in F$. The Wang sequence in Proposition 5.2 gives a short exact sequence

$$0 \longrightarrow \operatorname{coker}(H^{q-1}(A) - Id) \longrightarrow H^q(E, R) \longrightarrow \ker(H^q(A) - Id) \longrightarrow 0.$$

This sequence splits, and one gets a direct sum decomposition

$$H^q(E, R) = \ker(H^q(A) - Id) \oplus \operatorname{coker}(H^{q-1}(A) - Id).$$

This isomorphism is not canonical but depends on the choice of a basis. However, the endomorphism A^* is semi-simple, thus there is a canonical identification $\operatorname{coker}(H^{q-1}(A) - Id) = \ker(H^{q-1}(A) - Id)$. Taking into account that

$$\ker(H^{q-1}(A) - Id) \cong \ker(H^{q-1}(A) - Id) \otimes H^1(S^1, R)$$

resp.

$$\ker(H^q(A) - Id) \cong \ker(H^q(A) - Id) \otimes H^0(S^1, R),$$

together with the identity $\ker(H^q(A) - Id) = H^*(F)^A$, brings the final result. □

The bundle $T(A_1)$ is obtained by the action of A_1 on the fibre T^m. The induced endomorphism $\Lambda^*(A_1) =: A_1^*$ on the cohomology of the fibre $H^*(T^m, \mathbb{Q}) = \Lambda^*(\mathbb{Q}^m)$ is semi-simple. Therefore, by Corollary 5.3, we have

$$H^n(T(A_1), \mathbb{Q}) = \bigoplus_{p+q=n} H^p(S^1, \mathbb{Q}) \otimes H^q(T^m, \mathbb{Q})^{A_1^*}.$$

The matrices $A_j, j > 1$, act on $T(A_1)$ via $(t, x) \mapsto (t, A_j x)$, $x \in T^m$. Since the action is fibrewise the induced homomorphism in cohomology is of the form

$$\alpha_j : s \otimes y \mapsto s \otimes ((A_j)^* y),$$

where $s \in H^p(S^1, \mathbb{Q})$ and $y \in H^q(T^m, \mathbb{Q})^{A_1^*}$. We observe that the restriction of the semi-simple endomorphism A_j^* on $H^q(T^m, \mathbb{Q})^{A_1^*}$ is semi-simple. Note that the endomorphisms $\alpha_j, j > 1$ are semi-simple.

We have the following induction hypothesis:

$$H^n(T(A_1, A_2, \ldots, A_{i-1}), \mathbb{Q}) = \bigoplus_{q+r=n} H^q(T^{i-1}, \mathbb{Q}) \otimes H^r(T^m, \mathbb{Q})^{A_1^*, A_2^*, \ldots, A_{i-1}^*},$$

and the endomorphism induced by A_j, $j > i-1$, on $H^n(T(A_1, A_2, \ldots, A_{i-1}), \mathbb{Q})$ is given by the assignment $\alpha_j : s \otimes y \mapsto s \otimes ((A_j)^* y)$, where $s \in H^q(T^{i-1}, \mathbb{Q})$

and $y \in H^r(T^m, \mathbb{Q})^{A_1^* A_2^*, \ldots, A_{i-1}^*}$. The endomorphisms α_j, $j > i-1$, are semi-simple.

By construction $T(A_1, \ldots, A_i) = (I \times T(A_1, \ldots, A_{i-1}))/\sim$ where $(1, y) \sim (0, A_i y)$. We obtain by assigning $(t, x) \mapsto t$ a locally trivial fibration

$$\pi : T(A_1, \ldots, A_i) \longrightarrow S^1$$

over S^1 with fibre $T(A_1, \ldots, A_{i-1})$. The characteristic homeomorphism of this bundle over S^1 is the morphism induced by the action of A_i on $T(A_1, \ldots, A_{i-1})$. By induction hypothesis the corresponding homomorphism in cohomology is semi-simple, thus the cohomology result for bundles over S^1 yields eventually the assertion. Indeed, using the induction hypothesis and the compatibility of the tensor product with direct sums, we have

$$\begin{aligned}
&H^n(T(A_1, A_2, \ldots, A_i), \mathbb{Q}) \cong \\
&\cong \bigoplus_{q+p=n} (H^q(S^1, \mathbb{Q}) \otimes H^p(T(A_1, A_2, \ldots, A_{i-1}), \mathbb{Q})^{A_i^*}) \\
&\cong \bigoplus_{q+p=n} (H^q(S^1, \mathbb{Q}) \otimes \bigoplus_{a+b=p} (H^a(T^{i-1}, \mathbb{Q}) \otimes H^b(T^m, \mathbb{Q})^{A_1^*, A_2^*, \ldots, A_{i-1}^*})^{A_i^*}) \\
&= \bigoplus_{q+p=n} (H^q(S^1, \mathbb{Q}) \otimes \bigoplus_{a+b=p} (H^a(T^{i-1}, \mathbb{Q}) \otimes H^b(T^m, \mathbb{Q})^{A_1^*, A_2^*, \ldots, A_{i-1}^*, A_i^*})) \\
&= \bigoplus_{q+p=n} (\bigoplus_{a+b=p} (H^q(S^1, \mathbb{Q}) \otimes H^a(T^{i-1}, \mathbb{Q}) \otimes H^b(T^m, \mathbb{Q})^{A_1^*, A_2^*, \ldots, A_{i-1}^*, A_i^*})) \\
&\cong \bigoplus_{u+b=n} (H^u(T^i, \mathbb{Q}) \otimes H^b(T^m, \mathbb{Q})^{A_1^*, A_2^*, \ldots, A_{i-1}^*, A_i^*}).
\end{aligned}$$

One verifies that the endomorphism induced by A_j, $j > i$, on a single summand of the cohomology $H^n(T(A_1, A_2, \ldots, A_i), \mathbb{Q})$ is given by the assignment $\alpha_j : z \otimes y \mapsto z \otimes ((A_j)^* y)$, where $z \in H^u(T^i, \mathbb{Q})$ and $y \in H^b(T^m, \mathbb{Q})^{A_1^*, A_2^*, \ldots, A_i^*}$. The endomorphisms α_j, $j > i$, are semi-simple. □

Remark 5.4. The same result is correct if we replace the coefficient system $\mathbb{Q}$ by a finite field $\mathbb{Z}_\ell = \mathbb{Z}/\ell\mathbb{Z}$ where we have to suppose that the prime number ℓ is admissible with regard to the integral matrices $A_1, A_2, \ldots, A_r$, that is, the endomorphisms $A_{j,\ell} \in \mathrm{End}_{\mathbb{Z}_\ell}(\mathbb{Z}_\ell^m)$ induced by A_j are absolutely semi-simple. This is the case for almost all prime numbers.

It is not difficult to describe the space $H^*(N_\infty/(N_\infty \cap \Gamma), \mathbb{C})^{\Gamma_L}$ of elements in the cohomology of the fibre which are invariant under the action of Γ_L. Recall that $H^*(N_\infty/(N_\infty \cap \Gamma), \mathbb{C}) \cong \Lambda^*(\mathbb{C}^m)$. Let $\Sigma = \{\sigma_1, \ldots, \sigma_m\}$ be the set of embeddings $k \longrightarrow \mathbb{C}$. For each subset $J \subset \Sigma$, we find a one-dimensional subspace $U_J \subset \Lambda^{m-|J|}(\mathbb{C}^m)$ such that $u \in \Gamma_L$ acts on U_J via multiplication by $\prod_{\sigma \in J} \sigma(u^2)$. The direct sum of these subspaces exhaust $\Lambda^*(\mathbb{C}^m)$. Since the elements u in $\Gamma_L \subset \mathcal{O}_k^*$ are units, and u acts via u^2, we have that the product

$\prod_{\sigma\in\Sigma}\sigma(u^2)$ over all embeddings in Σ is equal to 1. Therefore, in order to identify the subsets $J\subset\Sigma$ with $\prod_{\sigma\in J}\sigma(u^2)=1$, we have to ensure that also $\prod_{\sigma\in J^c}\sigma(u^2)=1$ where σ ranges over all elements in the complement J^c of J in Σ. Clearly the empty set $J=\emptyset$ and the set $J=\Sigma$ fulfil these requirements, and the corresponding Γ_L-invariant spaces are equal to $U_\emptyset=\Lambda^m(\mathbb{C}^m)$ respectively $U_\Sigma=\Lambda^0(\mathbb{C}^m)$, thus, one-dimensional.

If k has a real embedding, that is, $s>0$, these subspaces are the only Γ_L-invariant subspaces in $H^*(N_\infty/(N_\infty\cap\Gamma),\mathbb{C})$. If $s=0$, it may happen that one finds Γ_L-invariant classes in $H^t(N_\infty/(N_\infty\cap\Gamma),\mathbb{C})$.

References

[1] A. Borel, Introduction aux Groupes Arithmétiques, Hermann, Paris, 1969.
[2] N. Bourbaki, Algebra II, Chapters 4-7, Springer, Berlin-Heidelberg, 2003.
[3] A. Fröhlich and M. J. Taylor, Algebraic number theory, Cambridge Studies in Advanced Mathematics, vol. **27**, Cambridge Univ. Press, Cambridge, 1993.
[4] G. Harder, *On the cohomology of $SL(2,\mathcal{O})$,* in: Lie Groups and Their Representations, Proc. of the Summer School on Group Representations, Halsted Press, New York-Toronto, 1975, pp. 139–150.
[5] G. Harder, *A Gauss–Bonnet formula for discrete arithmetically defined groups,* Ann. Sci. École Norm. Sup. (4) **4** (1971), 409–455.
[6] F. Hirzebruch, *Hilbert modular surfaces*, Enseign. Math. (2) **19** (1973), 183–281.
[7] M. Kneser, *Starke Approximation in algebraischen Gruppen. I*, J. Reine Angew. Math. **218** (1965), 190–203.
[8] J. W. Milnor, Singular Points of Complex Hypersurfaces, Ann. of Math. Stud. vol. **61**, Princeton University Press, Princeton, NJ, 1968.
[9] J. Schwermer, Zur ganzzahligen Kohomologie von Torusbündeln, Diplomarbeit, Inst. Mathematik, Universität Bonn, 1973.
[10] J. Schwermer, Kohomologie arithmetisch definierter Gruppen und Eisensteinreihen, Lecture Notes in Math. **988**, Springer-Verlag, Berlin-Heidelberg-New York, 1983.
[11] J. Schwermer, Reduction Theory and Arithmetic Groups, New Math. Monogr. vol. **45**, Cambridge Univ. Press, Cambridge, 2023.
[12] C. L. Siegel, *Symplectic geometry*, Amer. J. Math. **65** (1943), 1–86.
[13] C. L. Siegel, Lectures on Advanced Analytic Number Theory. Notes by S. Raghavan. Lect. Math., No. **23**, Tata Institute of Fundamental Research, Bombay, 1965.
[14] E. H. Spanier, Algebraic Topology, McGraw-Hill, New York, 1966.
[15] N. Steenrod, The Topology of Fibre Bundles, Princeton University Press, Princeton, NJ, 1951.

Opaska o komponentama ruba aritmetičkih kvocijenata grupe SL_2 nad poljem algebarskih brojeva

Joachim Schwermer

SAŽETAK. Za polje algebarskih brojeva k, promatramo kvocijente X_G/Γ pridružene aritmetičkim podgrupama Γ specijalne linearne algebarske grupe $G = SL_2$ definirane nad k. Grupa G je prosta, ranga jedan i rascjepiva nad k. Liejeva grupa G_∞ realnih točaka $\mathbb{Q}$-grupe $\mathrm{Res}_{k/\mathbb{Q}}(G)$, dobivene restrikcijom skalara, je konačni direktni produkt $G_\infty = \prod_{v\in V_{k,\infty}} G_v = SL_2(\mathbb{R})^s \times SL_2(\mathbb{C})^t$, gdje produkt prolazi po skupu $V_{k,\infty}$ svih arhimedskih mjesta od k, a s (odnosno t) označava broj realnih (odnosno kompleksnih) mjesta od k. Odgovarajući simetrični prostor je označen s X_G. Koristeći teoriju redukcije, može se konstruirati otvoreni podskup $Y_\Gamma \subset X_G/\Gamma$ čiji zatvarač $\overline{Y}_\Gamma$ je kompaktna mnogostrukost s rubom $\partial\overline{Y}_\Gamma$, pri čemu je ulaganje $\overline{Y}_\Gamma \longrightarrow X_G/\Gamma$ homotopska ekvivalencija. Komponente povezanosti $Y^{[P]}$ ruba $\partial\overline{Y}_\Gamma$ su u bijekciji sa skupom klasa Γ-konjugiranosti minimalnih paraboličkih k-podgrupa od G koji je konačan. Zanima nas geometrijska struktura komponenata ruba. Svaka komponenta ima prirodnu strukturu svežnja vlakana. U radu je dokazano da je taj svežanj homeomorfan torusu T^{s+t-1} dimenzije $s+t-1$, ima kompaktna vlakna T^m dimenzije $m = s + 2t = [k : \mathbb{Q}]$ te strukturnu grupu $SL_m(\mathbb{Z})$. Na kraju, određena je kohomologija komponenti $Y^{[P]}$.

Faculty of Mathematics, University of Vienna
Oskar-Morgenstern-Platz 1, A-1090 Vienna, Austria
E-mail: Joachim.Schwermer@univie.ac.at

Received: 24.9.2023.
Revised: 18.10.2023.
Accepted: 14.11.2023.

RAD HAZU. MATEMATIČKE ZNANOSTI
Vol. 28 = 558 (2024): 151-184
DOI: https://doi.org/10.21857/yvjrdcde6y

ON SWAN EXPONENTS OF SYMMETRIC AND EXTERIOR SQUARE GALOIS REPRESENTATIONS

Guy Henniart and Masao Oi

*Dedicated to Marko Tadić, on his 70th birthday.**

Abstract. Let F be a local non-Archimedean field and E a finite Galois extension of F, with Galois group G. If ρ is a representation of G on a complex vector space V, we may compose it with any tensor operation R on V, and get another representation $R\circ\rho$. We study the relation between the Swan exponents $\mathrm{Sw}(\rho)$ and $\mathrm{Sw}(R\circ\rho)$, with a particular attention to the cases where R is symmetric square or exterior square. Indeed those cases intervene in the local Langlands correspondence for split classical groups over F, via the formal degree conjecture, and we present some applications of our work to the explicit description of the Langlands parameter of simple cuspidal representations. For irreducible ρ our main results determine $\mathrm{Sw}(\mathrm{Sym}^2\rho)$ and $\mathrm{Sw}(\wedge^2\rho)$ from $\mathrm{Sw}(\rho)$ when the residue characteristic p of F is odd, and bound them in terms of $\mathrm{Sw}(\rho)$ when p is 2. In that case where p is 2 we conjecture stronger bounds, for which we provide evidence.

1. Introduction

Let p be a prime number, F a non-Archimedean local field of residue characteristic p, and E a finite Galois extension of F with Galois group $G = \mathrm{Gal}(E/F)$. Suppose that ρ is a finite-dimensional representation of G on a complex vector space V (in this paper, we refer to such ρ simply as a *Galois representation*). For any algebraic representation R of $\mathrm{GL}_{\mathbb{C}}(V)$ on a finite-dimensional complex vector space V', by composing R with ρ, we obtain

2020 *Mathematics Subject Classification.* Primary: 11F80; Secondary: 11S37, 22E50.
Key words and phrases. Swan exponents, Galois representations, local Langlands correspondence.

*The first author met Marko Tadić already in 1971, at the International Mathematical Olympiads in Slovakia. But we realized that only later, when discussing mathematics and more, which happened on many nice occasions.

another Galois representation $R \circ \rho$ of G.

$$G \xrightarrow[\rho]{} \mathrm{GL}_{\mathbb{C}}(V) \xrightarrow[R]{} \mathrm{GL}_{\mathbb{C}}(V'), \quad G \xrightarrow{R\circ\rho} \mathrm{GL}_{\mathbb{C}}(V')$$

Given that the *Swan exponent* is one of the most fundamental invariants of Galois representations (see Section 2.1 for the definition), it is natural to ask if there is an interesting relationship between the Swan exponents $\mathrm{Sw}(R \circ \rho)$ and $\mathrm{Sw}(\rho)$. This is the problem of our interest.

We first introduce several preceding results on this problem. Bushnell–Henniart–Kutzko investigated the case where ρ is irreducible and $R = \mathrm{Std} \otimes \mathrm{Std}^{\vee}$, i.e., $R \circ \rho = \rho \otimes \rho^{\vee}$, where $\rho^{\vee}$ denotes the contragredient representation of ρ, in [13]. They established an explicit formula of $\mathrm{Sw}(\rho \otimes \rho^{\vee})$. (In fact, their result is more general; for any two irreducible Galois representations ρ_1 and ρ_2, they obtained an explicit formula of $\mathrm{Sw}(\rho_1 \otimes \rho_2)$). Based on the result of Bushnell–Henniart–Kutzko, Anandavardhanan–Mondal ([2]) established a similar explicit formula in the case where R is the symmetric square Sym^2, the exterior square $\wedge^2$, or the Asai representation "Asai", by assuming that $p \neq 2$.

However, in these cases, the Swan exponent $\mathrm{Sw}(R \circ \rho)$ cannot be expressed only in terms of $\mathrm{Sw}(\rho)$. The description requires the information of a simple stratum (in the sense of Bushnell–Kutzko, [14]) associated to the supercuspidal representation corresponding to ρ under the local Langlands correspondence (cf. [13, 6.5, Theorem] and [2, Theorem 6.1]).

Based on this observation, we settle for looking for bounds estimating $\mathrm{Sw}(R \circ \rho)$ from $\mathrm{Sw}(\rho)$, sometimes even getting exact formulas. Concerning this direction, let us mention the work of Bushnell–Henniart [11] and also the work of Kiliç [27], in which upper bounds and lower bounds of $\mathrm{Sw}(\rho_1 \otimes \rho_2)$ are investigated. For example, some of the inequalities proved in *loc. cit.* are as follows:

THEOREM 1.1 ([11, Theorems AS and CS]). *Let ρ_1 and ρ_2 be Galois representations. We put $n_1 := \dim(\rho_1)$ and $n_2 := \dim(\rho_2)$.*

1. *If ρ_1 is minimal in the sense that $\mathrm{Sw}(\rho_1) \leq \mathrm{Sw}(\rho_1 \otimes \chi)$ for any character χ, then we have*

$$\mathrm{Sw}(\rho_1 \otimes \rho_2) \geq \frac{1}{2} \max\{n_2 \,\mathrm{Sw}(\rho_1), n_1 \,\mathrm{Sw}(\rho_2)\}.$$

2. *We have*

$$\mathrm{Sw}(\rho_1 \otimes \rho_2) \leq n_2 \,\mathrm{Sw}(\rho_1) + n_1 \,\mathrm{Sw}(\rho_2) - \min\{\mathrm{Sw}(\rho_1), \mathrm{Sw}(\rho_2)\}.$$

THEOREM 1.2 ([27, Theorem 9.3]). *If ρ is a minimal (in the sense as in Theorem 1.1) Galois representation on V, then, for any algebraic representation R of $\mathrm{GL}_{\mathbb{C}}(V)$, we have*

$$\mathrm{Sw}(\rho \otimes (R \circ \rho)) \geq \frac{1}{2} \dim(R \circ \rho) \cdot \mathrm{Sw}(\rho).$$

Now let us explain our main results. Our principal interest is in the case where $R = \mathrm{Sym}^2$ or $R = \wedge^2$. Our first main result is the following:

PROPOSITION 1.3 (Proposition 2.3). *Suppose that $p \neq 2$. For any Galois representation ρ, we have*

$$\mathrm{Sw}(\mathrm{Sym}^2 \rho) - \mathrm{Sw}(\wedge^2 \rho) = \mathrm{Sw}(\rho).$$

Note that if ρ is self-dual, then we have $\rho \otimes \rho^\vee \cong \rho \otimes \rho \cong \mathrm{Sym}^2 \rho \oplus \wedge^2 \rho$. Thus, by combining Proposition 1.3 with the explicit formula of $\mathrm{Sw}(\rho \otimes \rho)$ by Bushnell–Henniart–Kutzko mentioned above, it is possible to get a precise formula of $\mathrm{Sw}(\mathrm{Sym}^2 \rho)$ and $\mathrm{Sw}(\wedge^2 \rho)$. Especially, when ρ furthermore satisfies some additional conditions, the resulting formula is particularly simple as follows:

COROLLARY 1.4 (Corollary 2.4). *Suppose that $p \neq 2$. Let ρ be a $2n$-dimensional irreducible self-dual Galois representation such that $(\mathrm{Sw}(\rho), 2n) = 1$. Then we have*

$$\mathrm{Sw}(\mathrm{Sym}^2 \rho) = n \cdot \mathrm{Sw}(\rho) \quad \textit{and} \quad \mathrm{Sw}(\wedge^2 \rho) = (n-1) \cdot \mathrm{Sw}(\rho).$$

In fact, the equality of Proposition 1.3 has been already obtained in [2], thus not new. Our contribution is that we gave an alternative and simpler proof. See Remark 2.5 for more comments on Proposition 1.3 and Corollary 1.4.

We note that the assumption that $p \neq 2$ is crucially used in the proof of Proposition 1.3. In fact, the equality of Proposition 1.3 does not hold in general when $p = 2$. For example, we have the following:

PROPOSITION 1.5 (Proposition 2.8). *Suppose that $p = 2$. Let ρ be a $(2n+1)$-dimensional irreducible self-dual Galois representation such that $(\mathrm{Sw}(\rho), 2n+1) = 1$. Then we have*

$$\mathrm{Sw}(\mathrm{Sym}^2 \rho) - \mathrm{Sw}(\wedge^2 \rho) = 0.$$

Hence, by the same argument as in the case where $p \neq 2$ (i.e., using the Bushnell–Henniart–Kutzko formula), we obtain the following:

COROLLARY 1.6 (Corollary 2.10). *With the same assumptions as in Proposition 1.5, we have*

$$\mathrm{Sw}(\mathrm{Sym}^2 \rho) = \mathrm{Sw}(\wedge^2 \rho) = n \cdot \mathrm{Sw}(\rho).$$

On the other hand, there is also an example such that $\mathrm{Sw}(\mathrm{Sym}^2\rho) - \mathrm{Sw}(\wedge^2\rho)$ is not zero (for example, take ρ to be a 1-dimensional character such that ρ^2 is wildly ramified). Then what can we expect about the quantity $\mathrm{Sw}(\mathrm{Sym}^2\rho) - \mathrm{Sw}(\wedge^2\rho)$ when $p = 2$? Our second main result is the following:

THEOREM 1.7 (Theorem 2.6). *Suppose that $p = 2$. For any Galois representation ρ, we have*

$$0 \leq \mathrm{Sw}(\mathrm{Sym}^2\rho) - \mathrm{Sw}(\wedge^2\rho) \leq 2\,\mathrm{Sw}(\rho).$$

Note that the left inequality of Theorem 1.7 is "sharp" in the sense that there exists ρ which attains the equality (Proposition 1.5; see also Proposition 2.7). On the other hand, the right inequality is not sharp whenever ρ is not tame (Proposition 2.7). In fact, we expect that the following inequality holds and is sharp.

CONJECTURE 1.8. *Assume $p = 2$. For any Galois representation ρ, we have*

$$(\star) \qquad \mathrm{Sw}(\mathrm{Sym}^2\rho) - \mathrm{Sw}(\wedge^2\rho) \leq \mathrm{Sw}(\rho).$$

In this paper, we verify Conjecture 1.8 in several special cases and also discuss attempts to the conjecture in the general case.

1. In Section 3.1, we prove the inequality $(\star)$ for any 2-dimensional ρ.
2. In Section 3.2, we prove the inequality $(\star)$ for any ρ of the form $\mathrm{Ind}_{F'/F}\chi$, where F'/F is cyclic and χ is a character of $F'^{\times}$.
3. In Section 3.3, we discuss an approach based on an analysis of the structure of the ramification subgroups. We also obtain definitive results in some specific cases (Propositions 3.9 and 3.10).
4. In Section 3.4, we discuss an approach via induction on the order of the Galois group G. Especially, we show that if the conjecture is true, then the inequality $(\star)$ must be strict when ρ is orthogonal (3.13).
5. In Section 3.5, we discuss an approach via induction on $\dim(\rho)$.

We finally mention that, in fact, our motivation originates from investigating the *explicit local Langlands correspondence for classical groups*. When $\mathbf{G}$ is a connected reductive group over F, the local Langlands correspondence attaches to a smooth irreducible representation π of $\mathbf{G}(F)$ an L-parameter ϕ (L-parameters are a variant of Galois representations, see Section 4.1). When π is discrete series, it is expected that a certain explicit identity is satisfied between the formal degree of π and the special value of the adjoint γ-factor of ϕ (the *formal degree conjecture*, see Section 4.2). The point is that, when $\mathbf{G}$ is a classical group, the L-parameter ϕ can be naturally regarded as a Galois representation (say ρ) and then the adjoint γ-factor of ϕ is related to the Swan exponent $\mathrm{Sw}(R\circ\rho)$ for some tensor operation R. For example, if $\mathbf{G} = \mathrm{SO}_{2n+1}$

(resp. Sp_{2n} or SO_{2n}), then R is given by Sym^2 (resp. $\wedge^2$).

$$\begin{array}{ccccc} \pi\text{: disc. ser. of } \mathbf{G}(F) & \xleftarrow{\text{LLC}} & \phi\text{: } L\text{-par.} & \longleftrightarrow & \rho\text{: Gal. rep.} \\ \downarrow & & \downarrow & & \downarrow \\ \text{formal degree of } \pi & \xleftarrow{\text{FDC}} & \text{adjoint } \gamma\text{-factor of } \phi & \longleftrightarrow & \mathrm{Sw}(R\circ\rho) \end{array}$$

Thus, for a given L-parameter ϕ, computing $\mathrm{Sw}(R\circ\rho)$ is related to knowing the formal degree of π, which can be a clue to determine the representation π exactly (and vice versa). In Section 4, we present a few results which are obtained based on this philosophy.

1.1. *Notation.* For a non-Archimedean local field F, we write $\mathcal{O}_F$, $\mathfrak{p}_F$, and k_F for the ring of integers, the maximal ideal, and the residue field of F, respectively. For any $r \in \mathbb{Z}_{>0}$, we let $U_F^r := 1 + \mathfrak{p}_F^r$.

2. Main Results

2.1. *Swan exponent of Galois representations.* We first recall the definition of the Swan exponent of a local Galois representation. The contents of this subsection are based on [32, Chapter VI] and [31, Chapter 19].

Let F be a non-Archimedean local field with residue characteristic $p > 0$. Let E be a finite Galois extension of F. Let $G := \mathrm{Gal}(E/F)$ and $\{G_i\}_{\in\mathbb{Z}_{\geq 0}}$ be the filtration by the lower ramification subgroups of G; recall that $\{G_i\}_{i\geq 0}$ is decreasing and satisfies $G_i = \{1\}$ for sufficiently large i (see [32, Chapter IV]). We write g_i for the cardinality of G_i.

Suppose that ρ is a representation of G on a finite-dimensional $\mathbb{C}$-vector space V. We simply call such ρ a *Galois representation (of G)*. Then the *Swan exponent* of ρ is defined by

$$\mathrm{Sw}(\rho) := \sum_{i\geq 1} \frac{g_i}{g_0} \dim(V/V^{G_i}).$$

Similarly, the *Artin exponent* of ρ is defined by

$$\mathrm{Art}(\rho) := \sum_{i\geq 0} \frac{g_i}{g_0} \dim(V/V^{G_i}).$$

Let us review several basic properties of $\mathrm{Sw}(\rho)$ which will be useful to us.

2.1.1. *Swan exponent as a scalar product.* The Swan exponent of ρ can be also thought of as the scalar product of the character $\mathrm{Tr}(\rho)$ with the character $\mathcal{S}$ of the Swan representation "sw_G" (see [31, Chapter 19]):

$$\mathrm{Sw}(\rho) = \langle \mathrm{Tr}(\rho), \mathcal{S}\rangle.$$

2.1.2. *Swan exponent via upper ramification filtration.* For a Galois representation ρ, we define the number $\mathrm{slope}(\rho)$ by

$$\mathrm{slope}(\rho) := \inf\{s \in \mathbb{R}_{\geq 0} \mid \rho \text{ is trivial on } G^s\},$$

where $\{G^r\}_{r\geq 0}$ is the filtration of G by the upper ramification subgroups (see [32, Section IV.3] for the definition of the upper ramification subgroups). When ρ is irreducible, we have

$$\mathrm{Sw}(\rho) = \dim(\rho) \cdot \mathrm{slope}(\rho).$$

Indeed, it is obvious when ρ is trivial on $G_0 = G^0$, so let us consider the case where ρ is non-trivial on G_0. As each G_i is a normal subgroup of G, V^{G_i} is a subspace of V stable under the action of G. Thus, by letting $m \in \mathbb{Z}_{\geq 0}$ be the largest integer such that G_m is non-trivial, the irreducibility of ρ implies that

$$V^{G_i} = \begin{cases} 0 & \text{if } 0 \leq i \leq m, \\ V & \text{if } m < i. \end{cases}$$

Hence we have

$$\mathrm{Sw}(\rho) = \dim(V) \sum_{i=1}^{m} \frac{g_i}{g_0}.$$

The sum on the right-hand side is nothing but the value $\varphi_{E/F}(m)$ of the Herbrand function $\varphi_{E/F}$ with respect to $G = \mathrm{Gal}(E/F)$ at m (see [32, Section IV.3]). By the definition of the upper ramification filtration, we have

$$G^{\varphi_{E/F}(m)} = G_m \quad \text{and} \quad G^{\varphi_{E/F}(m)+\varepsilon} = G_{m+1}$$

for any sufficiently small positive number ε. In other words, we have $\mathrm{slope}(\rho) = \varphi_{E/F}(m) = \mathrm{Sw}(\rho)/\dim(\rho)$.

Note that, by the definition of the slope, we have the following:

LEMMA 2.1. *Let ρ_1 and ρ_2 be irreducible Galois representations of G. Then we have*

$$\mathrm{slope}(\rho_1 \otimes \rho_2) \leq \max\{\mathrm{slope}(\rho_1), \mathrm{slope}(\rho_2)\},$$

where the equality holds if $\mathrm{slope}(\rho_1) \neq \mathrm{slope}(\rho_2)$.

2.1.3. *Behavior under a tamely ramified extension.* Let F' be a tamely ramified extension of F contained in E. Note that this condition is equivalent to that the corresponding subgroup $G' := \mathrm{Gal}(E/F')$ of $G = \mathrm{Gal}(E/F)$ contains G_1. Let $\{G'_i\}_{i\in\mathbb{Z}_{\geq 0}}$ be the filtration of G' by the lower ramification subgroups of G'. By noting that $G' \supset G_1$ and $G'_i = G' \cap G_i$ for any $i \in \mathbb{Z}_{\geq 0}$ ([32, Chapter IV, Proposition 2]), we have $G'_i = G_i$ for any $i \in \mathbb{Z}_{\geq 1}$. This implies that

$$\mathrm{Sw}(\rho|_{G'}) = \frac{g_0}{g'_0} \cdot \mathrm{Sw}(\rho),$$

where g_0' denotes the cardinality of G_0'. In particular, by letting F' be the maximal tamely ramified extension of F in E so that $G' = G_1$, we have

$$\mathrm{Sw}(\rho|_{G_1}) = \frac{g_0}{g_1} \cdot \mathrm{Sw}(\rho) = e_{F'/F} \cdot \mathrm{Sw}(\rho),$$

where $e_{F'/F}$ denotes the ramification index of F'/F.

2.1.4. *Behavior under the induction.* Let F' be an extension of F contained in E. For any finite-dimensional representation σ of the Galois group $\mathrm{Gal}(E/F')$, we have

$$\mathrm{Sw}(\mathrm{Ind}_{F'/F}\sigma) = f_{F'/F} \cdot \mathrm{Sw}(\sigma) + (v_F(\mathfrak{d}_{F'/F}) - [F' : F] + f_{F'/F}) \cdot \dim(\sigma),$$

where $f_{F'/F}$ denotes the residue degree of F'/F and $\mathfrak{d}_{F'/F}$ is the discriminant of F'/F (see [32, Corollary of Proposition 4, Chapter VI], in which the formula is stated in terms of Artin exponents).

In particular, we have the following:

LEMMA 2.2. *Suppose that F'/F is a ramified quadratic extension of dyadic fields. Then we have*

$$\mathrm{Sw}(\mathrm{Ind}_{F'/F}\sigma) = \mathrm{Sw}(\sigma) + \mathrm{Sw}(\omega_{F'/F}) \cdot \dim(\sigma),$$

where $\omega_{F'/F}$ denotes the quadratic character of $F^\times$ corresponding to F'/F.

PROOF. By applying the above formula, we have

$$\mathrm{Sw}(\mathrm{Ind}_{F'/F}\sigma) = \mathrm{Sw}(\sigma) + (v_F(\mathfrak{d}_{F'/F}) - 1) \cdot \dim(\sigma).$$

We have $v_F(\mathfrak{d}_{F'/F}) = \mathrm{Sw}(\omega_{F'/F}) + 1$ by [32, Corollary 2 of Proposition 6, Chapter VI] (note that the symbol $f(-)$ in *loc. cit.* denotes the Artin exponent), hence we get the assertion. □

2.2. *Difference of* Sym^2 *and* $\wedge^2$ *Swan exponents: the case where* $p \neq 2$. In the rest of this section, we investigate the difference of the Swan exponents of the symmetric and exterior squares of a Galois representation. We first consider the case where the residue characteristic p of F is odd.

Let us start with the following observation. For any class function $f\colon G \to \mathbb{C}$, we define $\Psi^2 f\colon G \to \mathbb{C}$ by $\Psi^2 f(g) := f(g^2)$. Note that then $\Psi^2 f$ is again a class function on G. When ρ is a finite-dimensional representation of G whose dimension is d, for $g \in G$, we have

$$\mathrm{Tr}(\mathrm{Sym}^2\rho)(g) - \mathrm{Tr}(\wedge^2\rho)(g) = \sum_{i=1}^{d} \alpha_i^2 = \mathrm{Tr}(\rho)(g^2) = \Psi^2\,\mathrm{Tr}(\rho)(g),$$

where $\alpha_1, \ldots, \alpha_d \in \mathbb{C}^\times$ are the eigenvalues of $\rho(g)$. In other words, $\Psi^2\,\mathrm{Tr}(\rho)$ is the character of the virtual representation $\mathrm{Sym}^2\rho - \wedge^2\rho$ of G. Let us write $\Psi^2\rho := \mathrm{Sym}^2\rho - \wedge^2\rho$.

PROPOSITION 2.3. *Suppose that $p \neq 2$. For any Galois representation ρ, we have*

$$\mathrm{Sw}(\mathrm{Sym}^2 \rho) - \mathrm{Sw}(\wedge^2 \rho) = \mathrm{Sw}(\rho).$$

PROOF. If we replace F with the maximal tamely ramified extension F' of F in E, then each term in the equality in the assertion is multiplied by $e_{F'/F}$ (see Section 2.1.3). Thus, we may assume that $G = G_1$ from the beginning. Note that then G is a finite p-group. If we let p^r be the order of G, then ρ is defined over $\mathbb{Q}(\mu_{p^r})$, where μ_{p^r} denotes the subset of $\mathbb{C}$ consisting of p^r-th roots of unity (see [31, Proposition 33]).

Let $g \in G$ and $\alpha_1, \ldots, \alpha_d \in \mathbb{C}^\times$ be the eigenvalues of $\rho(g)$, where $d := \dim(\rho)$. Let $\tau \in \mathrm{Gal}(\mathbb{Q}(\mu_{p^r})/\mathbb{Q}) \cong (\mathbb{Z}/p^r\mathbb{Z})^\times$ be the element corresponding to $2 \in (\mathbb{Z}/p^r\mathbb{Z})^\times$, i.e., $\tau(\alpha) = \alpha^2$ for any $\alpha \in \mu_{p^r}$. As every eigenvalue α_i belongs to μ_{p^r}, the class function $\Psi^2 \mathrm{Tr}(\rho)$ is equal to the character $\mathrm{Tr}({}^\tau\rho)$ of the τ-twist of ρ. Hence we have $\Psi^2\rho = {}^\tau\rho$. Since the Galois twist does not change the Swan exponent, we get $\mathrm{Sw}(\mathrm{Sym}^2 \rho) - \mathrm{Sw}(\wedge^2\rho) = \mathrm{Sw}(\Psi^2\rho) = \mathrm{Sw}({}^\tau\rho) = \mathrm{Sw}(\rho)$. □

By considering the last non-trivial lower ramification subgroup, we can also prove the above theorem in the following way:

ANOTHER PROOF OF PROPOSITION 2.3. As in the above proof, let us assume that $G = G_1$ and ρ is a non-trivial irreducible representation of G. Let G_m be the last non-trivial lower ramification group of G, i.e., $G_{m+1} = \{1\}$. Then G_m is central in G by [32, Chapter IV, Proposition 10]. Hence G_m acts on ρ via a character χ. Then G_m acts on both $\mathrm{Sym}^2 \rho$ and $\wedge^2\rho$ via χ^2. As G_m is a p-group, where p is odd, χ^2 is non-trivial. This means that any irreducible constituent of $\mathrm{Sym}^2 \rho$ and $\wedge^2\rho$ has the same slope as ρ. Thus, by noting that $\dim(\mathrm{Sym}^2 \rho) - \dim(\wedge^2\rho) = \dim(\rho)$, we get $\mathrm{Sw}(\mathrm{Sym}^2 \rho) - \mathrm{Sw}(\wedge^2\rho) = \mathrm{Sw}(\rho)$ (see Section 2.1.2). □

COROLLARY 2.4. *Suppose that $p \neq 2$. Let ρ be a $2n$-dimensional irreducible self-dual Galois representation such that $(\mathrm{Sw}(\rho), 2n) = 1$. Then we have*

$$\mathrm{Sw}(\mathrm{Sym}^2 \rho) = n \cdot \mathrm{Sw}(\rho) \quad \textit{and} \quad \mathrm{Sw}(\wedge^2\rho) = (n-1) \cdot \mathrm{Sw}(\rho).$$

PROOF. As ρ is self-dual, we have $\rho \otimes \rho^\vee \cong \rho \otimes \rho \cong \mathrm{Sym}^2 \rho \oplus \wedge^2\rho$. By the explicit formula of Bushnell–Henniart–Kutzko ([13, 6.5, Theorem], see also [12, 3.5]), the assumption that $(\mathrm{Sw}(\rho), 2n) = 1$ implies that

$$\mathrm{Sw}(\rho \otimes \rho^\vee) = (2n-1)\,\mathrm{Sw}(\rho).$$

Thus, by combining this equality with Proposition 2.3, we get the assertion. □

REMARK 2.5. 1. It is known that there is no irreducible self-dual Galois representation whose dimension is odd and greater than 1 if the residue characteristic of F is odd (see, e.g., [30, page 84, Proposition 4]). Hence the assumption that the dimension of ρ is even in Corollary 2.4 automatically follows from the irreducibility and self-duality assumptions.
2. Proposition 2.3 is not new; it has been already obtained in the work of Anandavardhanan–Mondal ([2, Theorem 1.2]). Thus the point here is that our proof is different from theirs.
3. Since the explicit formula of Bushnell–Henniart–Kutzko works for general irreducible ρ, it is possible to get an explicit formula of $\mathrm{Sw}(\mathrm{Sym}^2\rho)$ and $\mathrm{Sw}(\wedge^2\rho)$ for any irreducible ρ as in the manner of the proof of Corollary 2.4. (We put various assumptions on ρ just because then the formula is simplified.) In fact, this is exactly how Anandavardhanan–Mondal established an explicit formula of $\mathrm{Sw}(\mathrm{Sym}^2\rho)$ and $\mathrm{Sw}(\wedge^2\rho)$.

2.3. *Difference of* Sym^2 *and* $\wedge^2$ *Swan exponents: the case where* $p = 2$. We next consider the case where the residue characteristic of F is $p = 2$.

THEOREM 2.6. *Suppose that* $p = 2$. *For any Galois representation* ρ *of* G, *we have*

$$0 \le \mathrm{Sw}(\mathrm{Sym}^2\rho) - \mathrm{Sw}(\wedge^2\rho) \le 2\,\mathrm{Sw}(\rho). \tag{2.1}$$

PROOF. By replacing G with G_1, we may assume that $G = G_1$ (the same argument as in the proof of the case where $p \neq 2$). We first note that the quantity $\mathrm{Sw}(\mathrm{Sym}^2\rho) - \mathrm{Sw}(\wedge^2\rho)$ is given by applying the operation Ψ^2 to $\mathrm{Tr}(\rho)$ and then taking the scalar product with $\mathcal{S}$ (see Section 2.1.1). In particular, $\mathrm{Sw}(\mathrm{Sym}^2\rho) - \mathrm{Sw}(\wedge^2\rho)$ is additive in ρ. Thus it is enough to prove the inequalities when ρ is irreducible. Since the assertion is obvious when ρ is trivial, we may also assume that ρ is non-trivial.

We put $d := \dim(\rho)$. We note that $\dim(\mathrm{Sym}^2\rho) - \dim(\wedge^2\rho) = \dim(\rho)$. By the definition of the Swan exponent, it suffices to show that, for any $i > 0$,

$$0 \le d - \dim((\mathrm{Sym}^2\rho)^{G_i}) + \dim((\wedge^2\rho)^{G_i}) \le 2d - 2\dim(\rho^{G_i}),$$

or equivalently

$$-d \le \dim((\wedge^2\rho)^{G_i}) - \dim((\mathrm{Sym}^2\rho)^{G_i}) \le d - 2\dim(\rho^{G_i}). \tag{2.2}$$

By noting that this is additive in ρ and depends only on G_i, we may assume that $G = G_i$ and ρ is irreducible non-trivial by the same argument as above. Then we have $\rho^G = 0$ and

$$\dim((\mathrm{Sym}^2\rho)^G) + \dim((\wedge^2\rho)^G) = \dim((\rho\otimes\rho)^G) = \begin{cases} 1 & \text{if } \rho \text{ is self-dual,} \\ 0 & \text{otherwise.} \end{cases}$$

Hence only $0, \pm 1$ are the possibilities of the value of

$$\dim((\wedge^2\rho)^G) - \dim((\mathrm{Sym}^2\,\rho)^G),$$

which gives the inequalities (2.2). □

Let us now discuss the cases where the equalities of (2.1) are attained. Note that all terms in (2.1) are 0 when ρ is tame, i.e., trivial on G_1.

PROPOSITION 2.7. *Suppose that $p = 2$. Let ρ be a Galois representation of G which is not tame. Then we have*

$$0 \leq \mathrm{Sw}(\mathrm{Sym}^2\,\rho) - \mathrm{Sw}(\wedge^2\rho) < 2\,\mathrm{Sw}(\rho).$$

The equality $\mathrm{Sw}(\mathrm{Sym}^2\,\rho) - \mathrm{Sw}(\wedge^2\rho) = 0$ holds if and only if the restriction of ρ on G_1 decomposes into the sum of quadratic characters.

PROOF. By the same argument as in the proof of Theorem 2.6, it suffices to show the inequalities

$$-d \leq \dim((\wedge^2\rho)^G) - \dim((\mathrm{Sym}^2\,\rho)^G) < d \tag{2.3}$$

and discuss the condition so that the left equality holds by assuming $G = G_1$ and ρ is a non-trivial irreducible representation of G whose dimension is d. The proof of Theorem 2.6 shows that the inequalities of (2.3) always hold and the equality on the left never holds when $d > 1$. When $d = 1$, i.e., ρ is a (non-trivial) character, we have $\dim((\wedge^2\rho)^G) = 0$ and

$$\dim((\mathrm{Sym}^2\,\rho)^G) = \begin{cases} 0 & \text{if } \rho^2 \text{ is non-trivial,} \\ 1 & \text{if } \rho^2 \text{ is trivial.} \end{cases}$$

This completes the proof. □

As an application of the above proposition, we have the following.

PROPOSITION 2.8. *Suppose that $p = 2$. Let ρ be a $(2n+1)$-dimensional irreducible self-dual Galois representation such that $(\mathrm{Sw}(\rho), 2n+1) = 1$. Then we have*

$$\mathrm{Sw}(\mathrm{Sym}^2\,\rho) - \mathrm{Sw}(\wedge^2\rho) = 0.$$

PROOF. Since p is prime to $\dim(\rho) = 2n+1$, the classification result of self-dual irreducible Galois representations due to Bushnell–Henniart implies that ρ is of the form $\mathrm{Ind}_{L/F}(\chi)$, where L/F is a tamely ramified extension of degree $2n+1$ and χ is a quadratic character of $L^\times$ ([10, Section 3]). In other words, there exist a subgroup H of G containing G_1 and a quadratic character χ of H such that $\rho \cong \mathrm{Ind}_H^G(\chi)$. Thus we have $\rho|_{G_1} \cong \bigoplus_{g \in G/H} {}^g\chi|_{G_1}$. Hence the assumption in the last sentence of Proposition 2.7 is satisfied and we get the assertion. □

REMARK 2.9. Note that the assumption that $\dim(\rho)$ is odd is not automatic when $p = 2$ and indispensable in the above proof so that the result of Bushnell–Henniart [10] is available.

By the same argument as in the case where $p \neq 2$ (i.e., using the Bushnell–Henniart–Kutzko formula), we obtain the following:

COROLLARY 2.10. *With the same assumptions as in Proposition 2.8, we have*

$$\mathrm{Sw}(\mathrm{Sym}^2 \rho) = \mathrm{Sw}(\wedge^2 \rho) = n \cdot \mathrm{Sw}(\rho).$$

3. A conjecture and some evidence

Let us keep the notation as in the previous section.

CONJECTURE 3.1. *Assume $p = 2$. For any Galois representation ρ, we have*

$$\mathrm{Sw}(\mathrm{Sym}^2 \rho) - \mathrm{Sw}(\wedge^2 \rho) \leq \mathrm{Sw}(\rho). \tag{3.1}$$

We remark that, by the same argument as in the proof of Theorem 2.6, the above conjecture is equivalent to the following:

CONJECTURE 3.2. *Assume $p = 2$ and $G = G_1$. For any irreducible faithful Galois representation ρ, we have*

$$\mathrm{Sw}(\mathrm{Sym}^2 \rho) - \mathrm{Sw}(\wedge^2 \rho) \leq \mathrm{Sw}(\rho).$$

In the following, let us suppose that $p = 2$ and $G = G_1$. In particular, $\dim(\rho)$ is a power of 2. Conjecture 3.2 is obvious when $\dim(\rho) = 1$, so let us investigate the case where $\dim(\rho) > 1$ in the following. Note that then G is necessarily non-abelian since any irreducible representation of an abelian group is 1-dimensional.

REMARK 3.3. Note that the proof of Theorem 2.6 used only a descending filtration by subgroups, but no particular property of that filtration. The stronger conjecture (Conjecture 3.1), if true, necessarily uses strong properties of the filtration by ramification subgroups, as can be seen in the examples in this section.

3.1. *The 2-dimensional case.* We first investigate the case where $\dim(\rho) = 2$. Since any irreducible representation of a p-group is monomial, i.e., induced from a 1-dimensional representation of a subgroup ([31, Theorems 14 and 16]), we may write $\rho \cong \mathrm{Ind}_{G'}^{G}(\chi)$, where $G' = \mathrm{Gal}(E/F')$ for a quadratic separable (ramified) extension F' of F and χ is a character of G'. We also see χ as a character of $F'^{\times}$ by class field theory. Let $\omega := \omega_{F'/F}$ be the quadratic character of $F^{\times}$ defining F'/F. Let $\chi^{\circ} := \chi|_{F^{\times}}$. We put $a := \mathrm{Sw}(\chi)$, $b := \mathrm{Sw}(\chi^2)$, $c := \mathrm{Sw}(\chi^{\circ})$, $d := \mathrm{Sw}(\omega\chi^{\circ})$, and $s := \mathrm{Sw}(\omega)$.

LEMMA 3.4. *We have the following relations:*

1. $d \leq \max\{c, s\}$*, where equality holds when* $c \neq s$*,*
2. $a \geq 2c$*,*
3. $0 < s \leq 2e$*, where* $e := \mathrm{val}_F(2)$*,*
4. $a \geq s$*.*

Proof. The inequality (1) is obvious.

Since F'/F is a ramified quadratic extension, we get the inequality (2).

As F'/F is wildly ramified, we have $s > 0$. On the other hand, as used in the proof of Lemma 2.2, we have $v_F(\mathfrak{d}_{F'/F}) = s + 1$. By the upper bound formula for $v_F(\mathfrak{d}_{F'/F})$ (see [32, Chapter III, Section 6, Remarks (1)]), we get $v_F(\mathfrak{d}_{F'/F}) \leq 1 + 2e$. Thus we obtain $s \leq 2e$, hence the inequalities (3).

Since $\rho \cong \mathrm{Ind}_{G'}^{G}(\chi)$ is irreducible, we necessarily have $\chi^\sigma \neq \chi$, where σ is the non-trivial element of $\mathrm{Gal}(F'/F)$. If $a < s$, then σ acts trivially on ${F'}^\times/1 + \mathfrak{p}_{F'}^{a+1}$, which implies that $\chi^\sigma \cdot \chi^{-1}$ is trivial, hence a contradiction. Thus we get the inequality (4). □

Lemma 3.5. *We have* $b \leq \max\{a/2, a - 2e\}\,(< a)$*. More precisely, we have*

- $b = a - 2e$ *when* $a > 4e$*,*
- $b = a/2$ *when* $a < 4e$ *and* a *is even,*
- $b \leq a/2$ *otherwise.*

Proof. The first assertion simply follows from that $(1 + \mathfrak{p}_{F'}^b)^2 \subset 1 + \mathfrak{p}_{F'}^{\min\{b+2e,2b\}}$.

To show the latter assertion, let us examine the behavior of the squaring map on $\mathcal{O}_{F'}^\times$. We have $(1+x)^2 = 1+2x+x^2$ for any $x \in F'$. If $v_{F'}(x) = i \geq 1$, then $v_{F'}(x^2) = 2i$ and $v_{F'}(2x) = i + 2e$ (recall that $e = v_F(2)$). If follows that $v_{F'}(2x + x^2) \geq \min\{2i, i + 2e\}$ with equality when $2i \neq i + 2e$. Recall that, by definition, $a \in \mathbb{Z}_{>0}$ is the integer such that χ is trivial on $1 + \mathfrak{p}_{F'}^{a+1}$, but not on $1 + \mathfrak{p}_{F'}^a$. (Note that we have $a > 0$ by Lemma 3.4 (3) and (4).)

Let us first assume $a > 4e$ and take $i = a - 2e$. Then we have $2i > i + 2e$, hence $\min\{2i, i + 2e\} = a$. Moreover, we have $(1 + x)^2 = 1 + 2x \pmod{\mathfrak{p}_{F'}^{a+1}}$. Consequently, there exists an element $x \in F'$ with valuation i such that $\chi(1 + x)^2 \neq 1$, thus $b\,(:= \mathrm{Sw}(\chi^2))$ is at least $a - 2e$. On the other hand, if we take $i = a - 2e + 1$, then we have $\min\{2i, i + 2e\} \geq a + 1$. Hence we have $\chi(1 + x)^2 = 1$ for any element $x \in F'$ with valuation i, which implies that $b = a - 2e$.

Let us then assume $a < 4e$ and a is even. We take $i = a/2$. Then we have $2i < i + 2e$ and $\min\{2i, i + 2e\} = 2i = a$. Hence we see that $(1 + x)^2 = 1 + x^2 \pmod{\mathfrak{p}_{F'}^{a+1}}$. By noting that the squaring map is bijective on $k_{F'}^\times$, we can choose $x \in F'$ with valuation i satisfying $\chi(1 + x)^2 \neq 1$. Similarly with $i = a/2 + 1$, we see that $\chi(1 + x)^2 = 1$ for any element $x \in F'$ with valuation i. Thus we get $b = a/2$.

When $a < 4e$ and a is odd or $a = 4e$, we can only assert that $b \leq a/2$. □

By Lemma 2.2, we have $\mathrm{Sw}(\rho) = a + s$. Note that we have

$$\wedge^2(\mathrm{Ind}_{F'/F}(\chi)) \cong \omega\chi^\circ \quad \text{and} \quad \mathrm{Sym}^2(\mathrm{Ind}_{F'/F}(\chi)) \cong \mathrm{Ind}_{F'/F}(\chi^2) \oplus \chi^\circ$$

(see Proposition A.1). Hence we get

$$\begin{aligned}\mathrm{Sw}(\mathrm{Sym}^2\,\rho) - \mathrm{Sw}(\wedge^2\rho) &= \mathrm{Sw}(\mathrm{Ind}_{F'/F}(\chi^2)) + \mathrm{Sw}(\chi^\circ) - \mathrm{Sw}(\omega\chi^\circ) \\ &= b + s + c - d,\end{aligned}$$

where we again used Lemma 2.2 in the second equality. We investigate the conjectural inequality (3.1) by a case-by-case argument:

1. If $c > s$, then $d = c$ by Lemma 3.4 (1). Thus, by using Lemma 3.5, we have

   $$\mathrm{Sw}(\mathrm{Sym}^2\,\rho) - \mathrm{Sw}(\wedge^2\rho) = b + s + c - c = b + s < a + s = \mathrm{Sw}(\rho).$$

   Note that this is the strict inequality.
2. If $c < s$, then $d = s$ by Lemma 3.4 (1). Thus, by using Lemma 3.5, we have

   $$\mathrm{Sw}(\mathrm{Sym}^2\,\rho) - \mathrm{Sw}(\wedge^2\rho) = b + s + c - s = b + c < a + s = \mathrm{Sw}(\rho).$$

   Note that this is the strict inequality.
3. If $c = s$, we have $d \leq c$ by Lemma 3.4 (1). Let us show that the weak inequality

   $$\mathrm{Sw}(\mathrm{Sym}^2\,\rho) - \mathrm{Sw}(\wedge^2\rho) = b + s + c - d \leq a + s = \mathrm{Sw}(\rho),$$

   or equivalently, $a - b - c + d \geq 0$ holds in this case.
   (a) Suppose that $a > 4e$, hence $b = a - 2e$ by Lemma 3.5. Since we have $s \leq 2e$ by Lemma 3.4 (3), we get $b + c = a - 2e + s \leq a$, which implies that $a - b - c + d \geq 0$. Note that we have the strict inequality unless $d = 0$ and $s = 2e$.
   (b) Suppose that $a < 4e$ and a is even, hence $b = a/2$ by Lemma 3.5. Since we have $a \geq 2c$ by Lemma 3.4 (2), we get $b + c \leq a$, which implies that $a - b - c + d \geq 0$. Note that we have the strict inequality unless $d = 0$ and $a = 2c$.
   (c) Suppose that $a \leq 4e$, hence $b \leq a/2$ by Lemma 3.5. Thus the same discussion as in the previous case works. Note that we have the strict inequality unless $d = 0$ and $a = 2b = 2c$.

   Note that $d = 0$ means that ρ has trivial determinant (recall that we are assuming $G = G_1$), i.e. is symplectic.

Thus we obtain the following:

THEOREM 3.6. *Conjecture 3.2 is true if* $\dim(\rho) = 2$. *Moreover, the inequality is strict unless* ρ *is symplectic.*

REMARK 3.7. Let us present an example where the equality $\mathrm{Sw}(\mathrm{Sym}^2\,\rho) - \mathrm{Sw}(\wedge^2\rho) = \mathrm{Sw}(\rho)$ holds. Take F'/F to have $s = 1$, and take χ such that $a = 2$ and $\chi^\circ = \omega$; then we have $c = 1, b = 1, d = 0$.

3.2. *The case where ρ is induced along a cyclic extension.*

PROPOSITION 3.8. *Suppose that ρ is an irreducible Galois representation of the form $\rho = \mathrm{Ind}_{F'/F}(\chi)$, where F'/F is cyclic and χ is a character of $F'^{\times}$. Then the inequality* (3.1) *holds.*

PROOF. Let $\rho = \mathrm{Ind}_{F'/F}(\chi)$, where F'/F is cyclic and χ is a character of $F'^{\times}$. In other words, F' is a subfield of E corresponding to a normal subgroup G' of G such that $G/G' \cong \mathrm{Gal}(F'/F)$ is cyclic, say order $2n$. Let c be a generator of G/G'. Let H be a subgroup of G which is the preimage of $\langle c^n \rangle \subset G/G'$. Let L be the subfield of F' corresponding to H.

By the Frobenius formula for induced representations, we have

$$\mathrm{Tr}(\Psi^2\rho)(g) = \mathrm{Tr}(\rho)(g^2) = \begin{cases} \sum_{\tau \in G/G'} \chi^{\tau}(g^2) & \text{if } g^2 \in G', \\ 0 & \text{otherwise.} \end{cases}$$

Note that, as G/G' is cyclic, we have $g^2 \in G'$ if and only if $g \in H$. Similarly, we have

$$\mathrm{Tr}(\mathrm{Ind}_{F'/F}(\chi^2))(g) = \begin{cases} \sum_{\tau \in G/G'} (\chi^2)^{\tau}(g) & \text{if } g \in G', \\ 0 & \text{otherwise.} \end{cases}$$

We let χ° denote the character of H corresponding to $\chi|_{L^{\times}}$ under local class field theory. By letting ω be the non-trivial character of H/G', we have

$$\mathrm{Tr}(\mathrm{Ind}_{L/F}(\chi^{\circ}) - \mathrm{Ind}_{L/F}(\chi^{\circ}\omega))(g) = \begin{cases} 0 & \text{if } g \in G', \\ 2\sum_{\tau \in G/H} (\chi^{\circ})^{\tau}(g) & \text{if } g \in H \smallsetminus G', \\ 0 & \text{otherwise.} \end{cases}$$

Therefore, by noting that $\chi(g^2) = \chi^{\circ}(g)$ for any $g \in H \smallsetminus G'$ (see [9, 29.1, Transfer theorem]), we get

$$\mathrm{Tr}(\Psi^2\rho) = \mathrm{Tr}(\mathrm{Ind}_{F'/F}(\chi^2) + \mathrm{Ind}_{L/F}(\chi^{\circ}) - \mathrm{Ind}_{L/F}(\chi^{\circ}\omega)).$$

Hence

$$\begin{aligned} \mathrm{Sym}^2\,\rho - \wedge^2\rho &\cong \mathrm{Ind}_{F'/F}(\chi^2) + \mathrm{Ind}_{L/F}(\chi^{\circ}) - \mathrm{Ind}_{L/F}(\chi^{\circ}\omega) \\ &\cong \mathrm{Ind}_{L/F}\big(\mathrm{Ind}_{F'/L}(\chi^2) + \chi^{\circ} - \chi^{\circ}\omega\big). \end{aligned}$$

On the other hand, we also have $\rho \cong \mathrm{Ind}_{L/F}(\mathrm{Ind}_{F'/L}(\chi))$. Hence, by Lemma 2.2, it suffices to show the inequality

$$\mathrm{Sw}(\mathrm{Ind}_{F'/L}(\chi^2)) + \mathrm{Sw}(\chi^{\circ}) - \mathrm{Sw}(\chi^{\circ}\omega) \le \mathrm{Sw}(\mathrm{Ind}_{F'/L}(\chi)) \tag{3.2}$$

(note that $\dim(\mathrm{Sym}^2\,\rho) - \dim(\wedge^2\rho) = \dim(\rho)$).

As observed in the proof of Theorem 3.6, this inequality (3.2) is nothing but the inequality (3.1) for $\mathrm{Ind}_{F'/L}(\chi)$, which we have already proved. ∎

3.3. *Approach based on the structure of ramification subgroups.* We next investigate the conjectural inequality by looking at the last two steps of the ramification filtration. Let us assume that $G = G_1 \neq \{1\}$ and ρ is an irreducible faithful representation of G. We let $n = \dim(\rho)$, a power of 2. Since the cases where $n = 1, 2$ are already treated, let us assume that $n > 2$ (most considerations also work when $n = 2$). Note that the center $Z(G)$ of G is cyclic by Lemma A.4.

Let $Z \subset G$ be the last non-trivial lower ramification subgroup. Since $G = G_1$, Z is contained in the center $Z(G)$ of G (this follows from [32, Chapter IV, Proposition 10]). By noting that Z has an $\mathbb{F}_2$-vector space structure ([32, Chapter IV, Section 2, Corollary 3]) and that $Z(G)$ is cyclic, the order of Z is 2 and $Z \neq G$ since $n > 1$.

Let us look at the smallest ramification subgroup H containing Z properly. The quotient $V = H/Z$ is a non-trivial $\mathbb{F}_2$-vector space, equipped with a quadratic form $q\colon V \to Z \cong \mathbb{F}_2$; $v \mapsto v^2$ and an alternating bilinear form $b\colon V \times V \to Z \cong \mathbb{F}_2$; $(v_1, v_2) \mapsto v_1 v_2 v_1^{-1} v_2^{-1}$. (See [32, Chapter IV, Proposition 10].) The center Y of H is the inverse image of

$$V^0 := \{v_0 \in V \mid b(v_0, v) = 0 \text{ for any } v \in V\}$$

in H. Note that $q|_{V^0}\colon V^0 \to Z$ is a group homomorphism. We have either that $q|_{V^0}$ is trivial (then Y has exponent 2) or that $q|_{V^0}$ is non-trivial, hence $\mathrm{Ker}(q|_{V^0})$ is a hyperplane in V^0 (then Y has elements of order 4).

The group G acts by conjugation on H and Y. As we have $G = G_1$, G acts trivially on $V = H/Z$ (again by [32, Chapter IV, Proposition 10]); this action preserves b and q. Similarly, the action of G on $V^0 = Y/Z$ is trivial, hence any $g \in G$ defines a homomorphism $\phi_g\colon V^0 \to Z$ given by $v \mapsto gvg^{-1}v^{-1}$. Since ϕ_g is multiplicative on g, we get a homomorphism

$$\phi\colon G \to \mathrm{Hom}_{\mathbb{F}_2}(V^0, Z); \quad g \mapsto \phi_g,$$

which is trivial on H. We define a subspace W of V^0 by $W := \bigcap_{g \in G} \mathrm{Ker}\, \phi_g$. If we let $I \subset Y$ be the inverse image of W in Y, then we have $I = H \cap Z(G)$. As $Z(G)$ is cyclic, we see that I is either Z or cyclic of order 4.

$$\begin{array}{ccccc}
H & \twoheadrightarrow & V := H/Z & \xrightarrow{q} & Z \\
\cup & & \cup & \nearrow_{q|_{V^0}} & \\
Y & \twoheadrightarrow & V^0 & & \\
\cup & & \cup & & \\
I & \twoheadrightarrow & W & & \\
\cup & & \cup & & \\
Z & \twoheadrightarrow & 0 & &
\end{array}$$

3.3.1. Let us first consider the case where I is cyclic of order 4.

PROPOSITION 3.9. *When I is of order 4, the strict inequality holds in Conjecture 3.2.*

PROOF. We write $Z = G^{\alpha}$ and $H = G^{\alpha'}$ via the upper numbering. As ρ is irreducible and faithful, we have $\mathrm{slope}(\rho) = \alpha$, hence $\mathrm{Sw}(\rho) = n\alpha$ (see Section 2.1.2). Since I acts on ρ as a faithful 1-dimensional character, any generator of I acts by -1 on $\rho \otimes \rho$. This implies that any irreducible constituent of $\rho \otimes \rho \cong \mathrm{Sym}^2 \rho \oplus \wedge^2 \rho$ has slope α'. Hence we have $\mathrm{Sw}(\mathrm{Sym}^2 \rho) = n(n+1)\alpha'/2$ and $\mathrm{Sw}(\wedge^2 \rho) = n(n-1)\alpha'/2$. Thus we get

$$\mathrm{Sw}(\mathrm{Sym}^2 \rho) - \mathrm{Sw}(\wedge^2 \rho) = n\alpha' < n\alpha = \mathrm{Sw}(\rho),$$

which is the strict inequality. □

3.3.2. We now assume that $I = Z$, which means that $W = 0$. Note that $\mathrm{Im}(\phi)$ is a subspace of the dual $(V^0)^\vee$ of V^0, and its orthogonal in V^0 is W by the definition of W. Hence we have $\mathrm{Im}(\phi) = \mathrm{Hom}_{\mathbb{F}_2}(V^0, Z)$. Now an irreducible representation of H non-trivial on Z is determined by its central character χ, which can be any character on Y which is non-trivial on Z (see Section A.3). The action of g in G on χ is obtained by multiplying χ by ϕ_g. An irreducible component of the restriction of ρ to H is thus labelled by such a character χ, and G acts transitively on (the classes of) such irreducible components.

PROPOSITION 3.10. *When $I = Z$ and ρ restricts irreducibly to H, the inequality holds. Moreover, the inequality is strict unless ρ is symplectic.*

In the rest of this subsection, we prove this proposition. Since $\rho|_H$ is irreducible, the center Y of H is equal to $I = Z$ by the same reasoning as in the beginning of this subsection. Hence we have $V^0 = 0$. In particular V is a symplectic vector space (meaning that the alternating form on it is non-degenerate). That representation is self-dual because the central character is the order 2 character of Z.

We write $Z = G^{\alpha}$ and $H = G^{\alpha'}$ as above (thus $\alpha' < \alpha$). Then we have $\mathrm{Sw}(\rho) = n\alpha$. Since $\rho|_H$ is irreducible and self-dual, $\rho \otimes \rho|_H$ contains the trivial representation exactly once. This implies that exactly one irreducible constituent of $\rho \otimes \rho$ has slope smaller than α'. Moreover, such a constituent must be a 1-dimensional character.

1. If ρ is self-dual, then $\rho \otimes \rho$ contains the trivial representation with multiplicity one.
   (a) If ρ is orthogonal (i.e., the trivial representation appears in $\mathrm{Sym}^2 \rho$), we have $\mathrm{Sw}(\mathrm{Sym}^2 \rho) = \alpha'(n(n+1)/2 - 1)$ and $\mathrm{Sw}(\wedge^2 \rho) = \alpha' n(n-1)/2$, hence
   $$\mathrm{Sw}(\mathrm{Sym}^2 \rho) - \mathrm{Sw}(\wedge^2 \rho) = (n-1)\alpha' < n\alpha = \mathrm{Sw}(\rho).$$
   (b) If ρ is symplectic (i.e., the trivial representation appears in $\wedge^2 \rho$), we have $\mathrm{Sw}(\mathrm{Sym}^2 \rho) = \alpha' n(n+1)/2$ and $\mathrm{Sw}(\wedge^2 \rho) = \alpha'(n(n -$

$1)/2-1)$, hence

$$\mathrm{Sw}(\mathrm{Sym}^2\rho)-\mathrm{Sw}(\wedge^2\rho)=(n+1)\alpha'.$$

2. If ρ is not self-dual, then the above observation on the slopes of the irreducible constituents of $\rho\otimes\rho$ implies that $\mathrm{Sw}(\mathrm{Sym}^2\rho)=\alpha'(n(n+1)/2-1)+\gamma$ and $\mathrm{Sw}(\wedge^2\rho)=\alpha'(n(n-1)/2-1)+\delta$ with $0\le\gamma\le\alpha'$ and $0\le\delta\le\alpha'$. Moreover, as $G=G_1$, δ cannot be 0 (if δ=0, then it means that $\wedge^2\rho$ contains the trivial character of G, hence ρ is self-dual). Thus we get

$$\mathrm{Sw}(\mathrm{Sym}^2\rho)-\mathrm{Sw}(\wedge^2\rho)=n\alpha'+\gamma-\delta<(n+1)\alpha'.$$

LEMMA 3.11. *We have $Z(G)H=G$.*

PROOF. For $g\in G$ and $v\in V=H/Z$ with a lift $h\in H$, the commutator $ghg^{-1}h^{-1}$ does not depend on the choice of the lift h and belongs to Z since $G=G_1$ acts trivially on V. Then $\Phi_g\colon V\to Z$; $v\mapsto ghg^{-1}h^{-1}$ is a linear homomorphism because we have, for $h,k\in H$, $ghkg^{-1}k^{-1}h^{-1}=(ghg^{-1}h^{-1})h(gkg^{-1}k^{-1})h^{-1}$ and h commutes with $gkg^{-1}k^{-1}$ which is in Z. Moreover, for $g,j\in G$, we have $gjhj^{-1}g^{-1}h^{-1}=g(jhj^{-1}h^{-1})g^{-1}(ghg^{-1}h^{-1})$, and g commutes with $jhj^{-1}h^{-1}$, hence $gjhj^{-1}g^{-1}h^{-1}=(jhj^{-1}h^{-1})(ghg^{-1}h^{-1})$. In other words, we have a group homomorphism

$$\Phi\colon G\to\mathrm{Hom}_{\mathbb{F}_2}(V,Z);\quad g\mapsto\Phi_g.$$

Note that since V is symplectic, the restriction of Φ to H is surjective. Let J be the kernel of Φ. The intersection of H and J is just Z, and $G=JH$. Moreover, J is the commutant of H in G. Thus, for any $j\in J$, $\rho(j)$ gives an H-automorphism of $\rho|_H$. Since $\rho|_H$ is irreducible, this implies that $\rho(j)$ is a scalar multiplication by Schur's lemma. Hence we get a homomorphism $\rho|_J\colon J\to\mathbb{C}^\times$. Noting that ρ is faithful, we see that J is abelian. Therefore, J is central in G, which implies that $J=Z(G)$. □

LEMMA 3.12. *We have $n\alpha\ge(n+1)\alpha'$*

PROOF. The same proof as that of [19, Théorème 1.8] works in the present setting. For the sake of completeness, let us reproduce it here.

By Proposition A.5, we have $\rho|_H\cong\mathrm{Ind}_X^H(\chi)$, where X is a subgroup of H such that X contains Z and X/Z is a maximal totally isotropic subspace of H/Z and χ is a character of X. Let us put $\tilde{X}:=Z(G)X$ and $\tilde{Y}:=Z(G)Y$. Then, since we have $G=Z(G)H$ by Lemma 3.11, there exists an extension of $\tilde{\chi}$ of χ to $\tilde{X}$ satisfying $\rho\cong\mathrm{Ind}_{\tilde{X}}^G(\tilde{\chi})$. By the induction formula for Swan exponents (Section 2.1.4; note that $[G\colon\tilde{X}]=n$), we have

$$\mathrm{Sw}(\rho)=\mathrm{Sw}(\tilde{\chi})+v_F(\mathfrak{d}_{E^{\tilde{X}}/F})-n+1, \tag{3.3}$$

where $E^{G'}$ denotes the fixed field of G' in E for any subgroup G' of G.

$$\begin{array}{ccc} G & \supset & H = G^{\alpha'} \\ \cup & & \cup \\ \tilde{X} & \supset & X \\ \cup & & \cup \\ \tilde{Y} & \supset & Y \\ \cup & & \cup \\ Z(G) & \supset & Z = G^{\alpha} \end{array}$$

To compute the right-hand side of (3.3), we introduce a few notations. For a finite Galois extension L/K of non-Archimedean local fields, we put

$$\alpha(L/K) := \inf\{u \mid \mathrm{Gal}(L/K)^u = \{1\}\},$$

$$\beta(L/K) := \inf\{v \mid \mathrm{Gal}(L/K)_v = \{1\}\}.$$

Note that we have

$$\varphi_{L/K}(\beta(L/K)) = \alpha(L/K) \quad \text{and} \quad \psi_{L/K}(\alpha(L/K)) = \beta(L/K),$$

where $\varphi_{L/K}$ and $\psi_{L/K}$ are the Herbrand functions. We remark that, in the case where L/K is ramified, we have $\alpha(L/K) = \sup\{u \mid \mathrm{Gal}(L/K)^u \neq \{1\}\}$ and $\beta(L/K) = \sup\{v \mid \mathrm{Gal}(L/K)_v \neq \{1\}\}$ and these numbers are non-negative.

We fix a non-trivial element $s \in G/\tilde{X} \cong \mathrm{Gal}(E^{\tilde{X}}/F)$ and let $M \subset G$ be the preimage of $\langle s \rangle \subset G/\tilde{X}$ in G and $N \subset \tilde{X}$ be the kernel of the character $\tilde{\chi}^{s-1}$. Thus we have the chain

$$G \supset M \supset \tilde{X} \supset N \supset \tilde{Y}$$

whose indices are $[G : M] = n/2$, $[M : \tilde{X}] = 2$, $[\tilde{X} : N] = 2$, and $[N : \tilde{Y}] = n/2$. Then, by a result of Buhler ([6, Proposition 3, page 31]), we have

$$\mathrm{Sw}(\tilde{\chi}) \geq \alpha(E^N/E^{\tilde{X}}) + \beta(E^{\tilde{X}}/E^M).$$

On the other hand, by [19, Lemme 4.4], we have

$$v_F(\mathfrak{d}_{E^{\tilde{X}}/F}) = n(\alpha(E^{\tilde{X}}/F) + 1) - \beta(E^{\tilde{X}}/F) - 1.$$

Hence, by (3.3), we have

$$\mathrm{Sw}(\rho) \geq \alpha(E^N/E^{\tilde{X}}) + \beta(E^{\tilde{X}}/E^M) + n\alpha(E^{\tilde{X}}/F) - \beta(E^{\tilde{X}}/F). \tag{3.4}$$

As the numbering of the lower ramification filtration is consistent with that for any subgroups ([32, Chapter IV, Proposition 2]), we have

$$\beta(E^{\tilde{X}}/E^M) = \beta(E^{\tilde{X}}/F)$$

(note that there is no jump between H and Z by definition). Also, we have

$$\begin{aligned}\alpha(E^N/E^{\tilde{X}}) &= \varphi_{E^N/E^{\tilde{X}}}(\beta(E^N/E^{\tilde{X}}))\\ &= \varphi_{E^N/E^{\tilde{X}}}(\beta(E^N/F))\\ &= \varphi_{E^N/E^{\tilde{X}}} \circ \psi_{E^N/F}(\alpha(E^N/F))\\ &= \varphi_{E^N/E^{\tilde{X}}} \circ \psi_{E^N/E^{\tilde{X}}} \circ \psi_{E^{\tilde{X}}/F}(\alpha(E^N/F)) = \psi_{E^{\tilde{X}}/F}(\alpha(E^N/F)).\end{aligned}$$

By noting that the slope of $\psi_{E^{\tilde{X}}/F}$ is greater than or equal to 1 and that $\alpha(E^N/F) = \alpha'$ (the upper numbering is consistent with taking a quotient of the Galois group; [32, Chapter IV, Proposition 14]), we get $\alpha(E^N/E^{\tilde{X}}) \geq \alpha'$. Thus, finally noting that $\alpha(E^{\tilde{X}}/F) = \alpha'$, the above inequality (3.4) implies that

$$\mathrm{Sw}(\rho) \geq (n+1)\alpha'.$$

Since we have $\mathrm{Sw}(\rho) = n\alpha$ (see Section 2.1.2), this is nothing but the claimed inequality. □

3.4. *Approach via induction on the order of G.* We next investigate the conjectural inequality from the viewpoint of the induction on the order of G.

PROPOSITION 3.13. *Suppose that Conjecture 3.1 is true. Then the inequality* (3.1) *is strict when ρ is irreducible orthogonal and non-trivial on G_1.*

PROOF. We prove the statement by induction on the order of G. Let ρ be an irreducible orthogonal representation of G on V and assume that $G = G_1$ as usual. We write $g := |G|$ and $g_i := |G_i|$. Let $m \in \mathbb{Z}_{>0}$ be the integer such that $G_m \supsetneq G_{m+1} = \{1\}$. By the definition of the Swan exponents, what we want to prove (3.1) is that

$$\sum_{i\geq 1} \frac{g_i}{g}\big(\dim(\mathrm{Sym}^2 V/(\mathrm{Sym}^2 V)^{G_i}) - \dim(\wedge^2 V/(\wedge^2 V)^{G_i})\big) < \sum_{i\geq 1} \frac{g_i}{g}\dim(V/V^{G_i}).$$

Since ρ is irreducible, hence $V^{G_i} = 0$ for any $i \leq m$, the above inequality is equivalent to

$$\sum_{i=1}^{m} \frac{g_i}{g}\big(\dim((\mathrm{Sym}^2 V)^{G_i}) - \dim((\wedge^2 V)^{G_i})\big) > 0. \tag{3.5}$$

Now let $a \in \mathbb{Z}_{>0}$ be the integer such that $G_1 = \cdots = G_a \supsetneq G_{a+1}$. Suppose that H is a subgroup of G containing G_{a+1}. Let $h := |H|$ and $h_i := |H_i|$. As the numbering of the lower ramification subgroups of G is consistent with any subgroup of G ([32, Chapter IV, Proposition 2]), we have

$$H = H_1 = \cdots = H_a \supseteq H_{a+1}\,(= G_{a+1}) \supseteq \cdots \supseteq H_m\,(= G_m) \supsetneq H_{m+1} = \{1\}.$$

Let us take H so that $[G : H] = 2$. In this case, there are three possibilities:

1. $\rho|_H$ is irreducible, hence orthogonal;
2. $\rho|_H$ has two irreducible constituents, both of which are orthogonal;

3. $\rho|_H$ has two irreducible constituents, both of which are not self-dual.

We first consider the cases (1) and (2). We apply the induction hypothesis to $\rho|_H$ in the case (1) and to each irreducible constituent of $\rho|_H$ and then summing up them in the case (2). Then, by the same reasoning as in the first paragraph, we obtain

$$\sum_{i=1}^{m} \frac{h_i}{h}\big(\dim((\mathrm{Sym}^2 V)^{H_i}) - \dim((\wedge^2 V)^{H_i})\big) > 0 \tag{3.6}$$

After multiplied by h/g, the summands of the left-hand side of (3.6) for $i > a$ are identical to those of (3.5). Thus, by noting that $G = G_1 = \cdots = G_a$ and $H = H_1 = \cdots = H_a$, it is enough to show that

(3.7)

$$\dim((\mathrm{Sym}^2 V)^G) - \dim((\wedge^2 V)^G) \geq \frac{h}{g}\big(\dim((\mathrm{Sym}^2 V)^H) - \dim((\wedge^2 V)^H)\big).$$

As ρ is irreducible orthogonal, we have $\dim((\mathrm{Sym}^2 V)^G) = 1$ and $\dim((\wedge^2 V)^G) = 0$. In the case (1), as $\rho|_H$ is irreducible orthogonal, we have $\dim((\mathrm{Sym}^2 V)^H) = 1$ and $\dim((\wedge^2 V)^H) = 0$. In the case (2), as $\rho|_H$ has two irreducible orthogonal constituents, we have $\dim((\mathrm{Sym}^2 V)^H) = 2$ and $\dim((\wedge^2 V)^H) = 0$. Since $h/g = 1/2$, we get the assertion in both cases.

We next consider the case (3). In this case, by applying Conjecture 3.1 to each irreducible constituent of $\rho|_H$ and then summing up them, we obtain

$$\sum_{i=1}^{m} \frac{h_i}{h}\big(\dim((\mathrm{Sym}^2 V)^{H_i}) - \dim((\wedge^2 V)^{H_i})\big) \geq 0$$

by the same reasoning as in the first paragraph. Thus, by the same discussion as in the cases (1) and (2), it suffices to show that the inequality (3.7) holds without equality. This follows from that $\dim((\mathrm{Sym}^2 V)^H) = 0$ and $\dim((\wedge^2 V)^H) = 0$ since two irreducible constituents of $\rho|_H$ are not self-dual. □

Thus it is also reasonable to expect the following.

Conjecture 3.14. *Assume $p = 2$. For any irreducible orthogonal Galois representation ρ of G which is not tame, we have*

$$\mathrm{Sw}(\mathrm{Sym}^2 \rho) - \mathrm{Sw}(\wedge^2 \rho) < \mathrm{Sw}(\rho).$$

The point here is that it could be possible to approach Conjecture 3.1 by induction on the order of G as performed in the proof of Proposition 3.13. At least, by a similar consideration to the above proof, we can conclude the following:

1. If ρ is orthogonal, then the inequality for H implies the inequality for G, and even a strict one unless ρ is induced from an orthogonal representation of H.

2. If ρ is not self-dual, then the inequality for H implies the inequality for G if $\rho|_H$ is not orthogonal.
3. If ρ is symplectic, then the inequality for H implies the inequality for G only if ρ is induced from a symplectic representation of H.

From this observation, we see that the obstacle for making the induction argument (on the order of G) work is the case where ρ is symplectic.

3.5. *Approach via induction on the dimension of ρ.* Let us finish this section by giving some comments on the approach via the induction on the dimension of ρ.

Suppose that ρ is irreducible, $G = G_1$, and $d := \dim(\rho) > 2$. Again by the fact that any irreducible representation of a p-group is monomial, we may write $\rho = \mathrm{Ind}_H^G(\sigma)$, where H is a subgroup of G of index 2 and σ is an irreducible representation of H. Let F' be the quadratic extension of F corresponding to H and ω be the quadratic character of $F^\times$ defining F'/F. By Lemma 2.2 and Section 2.1.2, we have

$$\mathrm{Sw}(\rho) = \mathrm{Sw}(\sigma) + sd/2,$$

where $s = \mathrm{Sw}(\omega)$. On the other hand, by Proposition A.1, we have

$$\wedge^2\rho \cong \mathrm{Ind}_H^G(\wedge^2\sigma) \oplus \tau \otimes \omega \quad \text{and} \quad \mathrm{Sym}^2\,\rho \cong \mathrm{Ind}_H^G(\mathrm{Sym}^2\,\sigma) \oplus \tau,$$

where τ is an extension of the representation $\sigma \otimes \sigma^\gamma$ of H ($\gamma \in G \smallsetminus H$) to G (see Proposition A.1). Hence, again by Lemma 2.2, we get

$$\mathrm{Sw}(\mathrm{Sym}^2\,\rho) - \mathrm{Sw}(\wedge^2\rho) = \mathrm{Sw}(\mathrm{Sym}^2\,\sigma) - \mathrm{Sw}(\wedge^2\sigma) + sd/2 + \mathrm{Sw}(\tau\otimes\omega) - \mathrm{Sw}(\tau).$$

Therefore, to get the conjectural inequality, it suffices to show that

$$\mathrm{Sw}(\mathrm{Sym}^2\,\sigma) - \mathrm{Sw}(\wedge^2\sigma) + \mathrm{Sw}(\tau \otimes \omega) - \mathrm{Sw}(\tau) \le \mathrm{Sw}(\sigma).$$

A favourable situation is when $\mathrm{Sw}(\tau \otimes \omega) = \mathrm{Sw}(\tau)$, because then the inequality for σ implies the inequality for ρ, and similarly for the strict inequality. This is the case if, for example, the slope of any irreducible constituent of τ is greater than s by Lemma 2.1. But we cannot insure this property in general. Moreover, when σ is not self-dual, hence σ^γ is the contragredient of σ, $\sigma \otimes \sigma^\gamma$ contains the trivial character of H. Thus τ contains at least one irreducible constituent whose slope is 0 (i.e., the trivial character of G), hence smaller than s. Therefore the equality $\mathrm{Sw}(\tau \otimes \omega) = \mathrm{Sw}(\tau)$ never holds in this case. This means that we should have some stronger inequality for σ to conclude the conjectural inequality for ρ if σ is not self-dual.

4. Application to the local Langlands correspondence

4.1. *Local Langlands correspondence.* From now on, we assume that the characteristic of a non-Archimedean local field F is zero. We write W_F for the Weil group of F. Let $\mathbf{G}$ be a split connected reductive group over F. Let $\hat{\mathbf{G}}$ denote the Langlands dual group of $\mathbf{G}$. We say that a homomorphism

$\phi\colon W_F \times \mathrm{SL}_2(\mathbb{C}) \to \hat{\mathbf{G}}$ is an *L-parameter* of $\mathbf{G}$ if ϕ is smooth on W_F and the restriction $\phi|_{\mathrm{SL}_2(\mathbb{C})}\colon \mathrm{SL}_2(\mathbb{C}) \to \hat{\mathbf{G}}$ is algebraic. We let $\Pi(\mathbf{G})$ be the set of equivalence classes of irreducible smooth representations of $\mathbf{G}(F)$ and $\Phi(\mathbf{G})$ the set of $\hat{\mathbf{G}}$-conjugacy classes of L-parameters of $\mathbf{G}$.

The conjectural *local Langlands correspondence* asserts that there exists a natural map

$$\mathrm{LLC}_{\mathbf{G}}\colon \Pi(\mathbf{G}) \to \Phi(\mathbf{G}),$$

with finite fibers. In other words, by letting $\Pi_\phi^{\mathbf{G}}$ be the fiber of the map $\mathrm{LLC}_{\mathbf{G}}$ at an L-parameter ϕ (called an *L-packet*), we have a natural partition

$$\Pi(\mathbf{G}) = \bigsqcup_{\phi \in \Phi(\mathbf{G})} \Pi_\phi^{\mathbf{G}},$$

where each $\Pi_\phi^{\mathbf{G}}$ is finite. Moreover, it is expected that each $\Pi_\phi^{\mathbf{G}}$ is equipped with a natural map $\Pi_\phi^{\mathbf{G}} \to \mathrm{Irr}(\mathcal{S}_\phi)$, where $\mathrm{Irr}(\mathcal{S}_\phi)$ is the set of irreducible characters of a certain finite group $\mathcal{S}_\phi$ associated to ϕ (see [24, Section 1] and also [3, Section 6] for the details).

The local Langlands correspondence has been established for several specific groups. Especially, when $\mathbf{G}$ is GL_N, the correspondence was constructed by Harris–Taylor [18] and the first author [20]. Also, for a certain class of classical groups, the correspondence has been established; for example, quasi-split symplectic and orthogonal groups by Arthur [4]. Our motivation is to seek an explicit description of the local Langlands correspondence for these groups.

4.2. *Hiraga–Ichino–Ikeda's formal degree conjecture.* We next recall the *formal degree conjecture* proposed by Hiraga–Ichino–Ikeda ([24]).

Conjecture 4.1 (Formal degree conjecture, [24, Conjecture 1.4]). *We assume the local Langlands correspondence for $\mathbf{G}$. Suppose that $\pi \in \Pi(\mathbf{G})$ is a discrete series representation whose L-parameter is ϕ. Then we have the following identity:*

$$\deg(\pi) = \frac{\langle 1, \pi \rangle}{|\mathcal{S}_\phi^\natural|} \cdot |\gamma(0, \mathrm{Ad} \circ \phi, \psi_F)|.$$

Here,

- $\deg(\pi)$ *is the formal degree of π (see [24] and also [23] for the normalization of the Haar measure used here),*
- $\langle -, \pi \rangle$ *denotes the irreducible character of $\mathcal{S}_\phi$ associated to π via the above-mentioned map $\Pi_\phi^{\mathbf{G}} \to \mathrm{Irr}(\mathcal{S}_\phi)$,*
- $\mathcal{S}_\phi^\natural$ *is a variant of the group $\mathcal{S}_\phi$ (see [24, Section 1] for the definition),*
- $\gamma(-, \mathrm{Ad} \circ \phi, \psi_F)|$ *denotes the γ-factor of the representation* $\mathrm{Ad} \circ \phi$ *of $W_F \times \mathrm{SL}_2(\mathbb{C})$ with respect to a non-trivial additive character ψ_F, where* Ad *is the adjoint representation of $\hat{\mathbf{G}}$ on* $\mathrm{Lie}(\hat{\mathbf{G}})/\mathrm{Lie}(Z(\hat{\mathbf{G}}))$.

4.3. *Relation to Swan exponents.* Now we explain why the above conjectures are related to the problem of our interest. For this, let us first review the γ-factors for L-parameters. For simplicity, we consider only the case where the $\mathrm{SL}_2(\mathbb{C})$-part is trivial. (See [16, Section 2] for the general case.)

We first consider the case of GL_n. In this case, an L-parameter with trivial $\mathrm{SL}_2(\mathbb{C})$-part is nothing but an n-dimensional smooth semisimple representation of W_F. Let ϕ be such a representation of W_F on a $\mathbb{C}$-vector space V. Then its L-factor is defined by

$$L(\phi, s) := \det(1 - q^{-s} \cdot \phi(\mathrm{Frob}) \,\big|\, V^{\phi(I_F)})^{-1},$$

where I_F denotes the inertia subgroup of W_F and Frob is any lift of the geometric Frobenius. Also, by fixing a non-trivial additive character ψ_F of F, the ε-factor $\varepsilon(\phi, s, \psi_F)$ is associated (Deligne [15] and Tate [33]). We do not recall the definition of the ε-factor, but note that it has the following relationship with the Artin exponent:

$$\varepsilon(\phi, s, \psi_F) = w \cdot q^{\mathrm{Art}(\phi)(\frac{1}{2} - s)},$$

where w is a complex number independent of s, which is a root of unity when ρ is self-dual (see [16, Section 2.3]), and ψ_F is taken to be of level zero, i.e., trivial on $\mathcal{O}_F$ but not on $\mathfrak{p}_F^{-1}$. Let us recall that the γ-factor is defined by using these local factors as follows:

$$\gamma(\phi, s, \psi_F) := \varepsilon(\phi, s, \psi_F) \cdot \frac{L(\phi^\vee, 1 - s)}{L(\phi, s)},$$

where $\phi^\vee$ is the contragredient representation of ϕ.

We next consider the case where $\mathbf{G}$ is general. In this case, by taking a finite-dimensional algebraic representation R of $\hat{\mathbf{G}}$, we obtain an L-parameter $R \circ \phi$ of a general linear group. Thus we can consider its L-factor, ε-factor, and γ-factor. In the formal degree conjecture, R is taken to be the adjoint representation of $\hat{\mathbf{G}}$. Note that Ad is self-dual (consider the Killing form), hence so is $\mathrm{Ad} \circ \phi$. For example, when $\mathbf{G}$ is one of GL_N, SO_N, and Sp_{2n}, $\mathrm{Ad} \circ \phi$ is described as follows. By composing ϕ with the standard representation of $\hat{\mathbf{G}}$, we may regard ϕ as a representation ρ of W_F (let us write ρ). Then, $\mathrm{Ad} \circ \phi$ is isomorphic to $R \circ \rho$ as representations of W_F, where

$$R = \begin{cases} \mathrm{Std} \otimes \mathrm{Std}^\vee - \mathbb{1} & \text{if } \mathbf{G} = \mathrm{GL}_N, \\ \mathrm{Sym}^2 & \text{if } \mathbf{G} = \mathrm{SO}_{2n+1}, \\ \wedge^2 & \text{if } \mathbf{G} = \mathrm{Sp}_{2n} \text{ or } \mathbf{G} = \mathrm{SO}_{2n}. \end{cases}$$

Now, by the above consideration, we can rewrite the identity predicted by the formal degree conjecture as follows:

$$\deg(\pi) = \frac{\langle 1, \pi \rangle}{|\mathcal{S}_\phi^\natural|} \cdot q^{\frac{1}{2}\,\mathrm{Art}(\mathrm{Ad} \circ \phi)} \cdot \frac{|L(\mathrm{Ad} \circ \phi, 1)|}{|L(\mathrm{Ad} \circ \phi, 0)|}. \tag{4.1}$$

Our fundamental expectation is that establishing this identity is related to investigating the explicit local Langlands correspondence. This is exactly the point where our motivation for computing the Swan exponent of $\mathrm{Sym}^2 \rho$ or $\wedge^2 \rho$ comes.

For example, let us consider the case where $\mathbf{G}$ is either SO_N or Sp_{2n}. In fact, Conjecture 4.1 in this case has been already solved ([25] for SO_{2n+1} and [5] for SO_{2n} and Sp_{2n}). Suppose that an L-parameter ϕ is given "explicitly" in the sense that we have a description of the associated representation $\rho = \mathrm{std} \circ \phi$ of W_F. Then, by computing the quantity on the right-hand side of (4.1), we can access the formal degree of $\pi \in \Pi_\phi^{\mathbf{G}}$. This enables us to narrow down the possibility of π. Of course, here the roles of ϕ and π can be swapped; we can also start from an explicitly given discrete series representation of $\mathbf{G}(F)$.

Conversely, we can also try to get the identity (4.1) by assuming the explicit local Langlands correspondence, i.e., assuming that we have an explicit description of an irreducible discrete series representation π of $\mathbf{G}(F)$ and its L-parameter ϕ.

4.4. *Some consequences for simple supercuspidal representations.* Now we explain that the above strategy indeed works for *simple supercuspidal representations*, in the sense of Gross–Reeder [16], of symplectic groups.

4.4.1. *From explicit LLC to FDC.*

Corollary 4.2. *Simple supercuspidal representations of symplectic groups satisfy the formal degree conjecture when $p \neq 2$.*

Proof. We utilize the result of [29] (see [29, Section 9] for the details of the arguments in this paragraph). Let π be a simple supercuspidal representation of $\mathrm{Sp}_{2n}(F)$ with L-parameter ϕ. By [29, Theorem 7.18], as a $(2n+1)$-dimensional representation of W_F, ϕ is the direct sum of a $2n$-dimensional representation ϕ_0 satisfying $\mathrm{Sw}(\phi_0) = 1$ and the 1-dimensional representation $\det \circ \phi_0$. Moreover, [29, Theorem 7.18] also says that the L-packet of ϕ consists of exactly two elements, which implies that $\langle \pi, 1 \rangle = 1$ and $|\mathcal{S}_\phi^\natural| = 2$. Since the adjoint L-factor $L(s, \mathrm{Ad} \circ \phi)$ is trivial ([29, Proposition 9.22]), the right-hand side of the equality (4.1) is given by $\frac{1}{2} \cdot q^{\frac{1}{2}\,\mathrm{Art}(\mathrm{Ad} \circ \phi)}$. By noting that $\mathrm{Ad} \circ \phi \cong \wedge^2 \phi_0 \oplus \phi_0 \otimes (\det \circ \phi_0)$ and again using that $L(s, \mathrm{Ad} \circ \phi)$ is trivial, we see that

$$\mathrm{Art}(\mathrm{Ad} \circ \phi) = \mathrm{Sw}(\mathrm{Ad} \circ \phi) + n(2n+1) = \mathrm{Sw}(\wedge^2 \phi_0) + 1 + n(2n+1).$$

On the other hand, by definition, the simple supercuspidal representation π is constructed by the compact induction of a character of an explicit open compact subgroup of $\mathrm{Sp}_{2n}(F)$ (see [29, Section 2]). Thus, by using a formula for the formal degrees of such compactly-induced supercuspidal representations (see, e.g., [8, Theorem A.14]), we can express $\deg(\pi)$ in terms of the volume of the open compact subgroup. As performed in [16] (see also the end

of [29, Section 9]), we can conclude that $\deg(\pi) = \frac{1}{2} \cdot q^{n^2+n}$. Therefore, in order to get the equality (4.1), it suffices to show that $\mathrm{Sw}(\wedge^2\phi_0) = n - 1$. This is a special case of Corollary 2.4. □

REMARK 4.3. In [29], the second author proved the equality $\mathrm{Sw}(\wedge^2\rho) = n - 1$, hence obtained Corollary 4.2, in the case where $p \nmid 2n$ or $p = p^e \cdot n'$ for $e \in \mathbb{Z}_{>0}$ and $n' \in \mathbb{Z}_{>0}$ satisfying $n' | (p-1)$. In [28], Mieda obtained Corollary 4.2 for any $p \neq 2$ via a completely different method. On the other hand, as mentioned above, it was announced by Beuzart-Plessis that the formal degree conjecture for Sp_{2n} has been solved (see [5]). Hence Corollary 4.2 is not new in any case. But we would like to emphasize that our proof presented above is new.

4.4.2. *From FDC to explicit LLC.* We next consider the case where $p = 2$. In this case, we determined explicitly the L-parameter of a simple supercuspidal representation of $\mathrm{Sp}_{2n}(F)$ in [22]. However, we cannot deduce the formal degree conjecture for simple supercuspidal representations of $\mathrm{Sp}_{2n}(F)$ from the description in *loc. cit.* as we did in Section 4.4.1. Rather, in contrast to the case where $p \neq 2$, we utilized the formal degree conjecture in order to determine the L-parameter. Let us just present the outline of the arguments of *loc. cit.* here.

The point is starting from an irreducible $(2n+1)$-dimensional orthogonal representation ρ of W_F whose Swan exponent is 1. Then it associates an irreducible supercuspidal representation π of $\mathrm{Sp}_{2n}(F)$. On the other hand, it also associates an irreducible self-dual supercuspidal representation Π of $\mathrm{GL}_{2n+1}(F)$, which is known to be simple supercuspidal. By utilizing the twisted endoscopic character relation between Π and π, we can prove that π is either depth-zero supercuspidal or simple supercuspidal ([22, Corollary 4.5]). Since we know that $\mathrm{Sw}(\wedge^2\rho) = n$ ([22, Proposition 4.12], or more generally, Corollary 2.10 of this paper), the formal degree conjecture tells us the value of the formal degree of π. In fact, this information is enough for concluding that π is not depth-zero, hence simple supercuspidal (see [21, A.4]). Once we see that π is simple supercuspidal, it is not difficult to determine it exactly again by using the twisted endoscopic character relation.

REMARK 4.4. Although we only mentioned the case of Sp_{2n}, it is also possible to establish the explicit local Langlands correspondence for simple supercuspidal representations of split special orthogonal groups by utilizing the formal degree conjecture effectively. That is the content of [1].

5. Simple supercuspidal L-parameters for $\mathrm{Sp}_6(\mathbb{Q}_2)$ have value in $G_2(\mathbb{C})$

This section, a remark really, is prompted by a question of Gordan Savin to the authors. After we had submitted our previous paper [22] mentioned

in Section 4.4.2, Savin asked us if the L-parameter of a simple supercuspidal representation of $\mathrm{Sp}_6(\mathbb{Q}_2)$, which takes values in $\mathrm{SO}_7(\mathbb{C})$, actually can be conjugated to take values in the subgroup $G_2(\mathbb{C})$ of $\mathrm{SO}_7(\mathbb{C})$.

That question is related to the analysis of the parameter of simple supercuspidal representations of $G_2(\mathbb{Q}_2)$ in [26, Section 4]. In *loc. cit.*, a subgroup I of $G_2(\mathbb{C})$ is introduced. The group I is a semi-direct product of a normal subgroup J, which is isomorphic to the additive 2-group $\mathbb{F}_8$ (where $\mathbb{F}_8$ is a field with 8 elements), with a subgroup which is itself a semi-direct product of $\mathbb{F}_8^\times$ and $\mathrm{Gal}(\mathbb{F}_8/\mathbb{F}_2)$ (acting naturally on $\mathbb{F}_8^\times$), with their natural actions on $\mathbb{F}_8$.

$$1 \longrightarrow J\,(\cong \mathbb{F}_8) \longrightarrow I \underset{\text{split}}{\longleftrightarrow} I/J\,(\cong \mathbb{F}_8^\times \rtimes \mathrm{Gal}(\mathbb{F}_8/\mathbb{F}_2)) \longrightarrow 1$$

It is shown that the inclusion of I into $G_2(\mathbb{C})$, itself inside $\mathrm{GL}_7(\mathbb{C})$, gives the unique irreducible faithful self-dual (hence orthogonal) representation of I of dimension 7. It is also explicited in *loc. cit.* how the group I is a quotient of $W_{\mathbb{Q}_2}$.

Now take a simple supercuspidal representation π of $\mathrm{Sp}_6(\mathbb{Q}_2)$, and let σ be the corresponding representation of $W_{\mathbb{Q}_2}$, which is an orthogonal irreducible representation of dimension 7.

PROPOSITION 5.1. *The representation σ is the same as the representation described after Proposition 4.2 in loc. cit.*

PROOF. By [22] (cf. [10]), the representation σ is given by $\mathrm{Ind}_{K/\mathbb{Q}_2}(\chi)$, where $K/\mathbb{Q}_2$ is the tame totally ramified extension of degree 7 generated by a 7th root ϖ of 2 (remark that K is unique up to isomorphism) and χ is a quadratic character of $K^\times$ of Swan exponent 1. Note that such χ must be as follows:

- $\chi(\varpi)$ is either 1 or -1,
- $\chi|_{U_K^2}$ is trivial, and
- $\chi|_{U_K^1}$ is the unique non-trivial character (say χ_1) of U_K^1.

Under the identification

$$U_K^1/U_K^2 \cong \mathbb{F}_2 \colon 1 + \varpi x \mapsto \overline{x} \quad (x \in \mathcal{O}_K),$$

where $\overline{x}$ denotes the modulo $\mathfrak{p}_K$ reduction, we transform χ_1 into the non-trivial character of $\mathbb{F}_2$. Moreover, since we have $\det(\sigma) \cong \delta_{K/\mathbb{Q}_2} \cdot (\chi|_{\mathbb{Q}_2^\times})$, where $\delta_{K/\mathbb{Q}_2} := \det(\mathrm{Ind}_{K/\mathbb{Q}_2}\,\mathbb{1})$, the triviality of $\det(\sigma)$ implies that $\chi|_{\mathbb{Q}_2^\times} = \delta_{K/\mathbb{Q}_2}$ (see [9, 29.2]). By [7, (10.1.6) Proposition], $\delta_{K/\mathbb{Q}_2}$ is unramified and takes value the Jacobi symbol $(\frac{2}{7})$ at 2. But $(\frac{2}{7}) = 1$ since $3^2 \equiv 2 \pmod 7$. Hence $\chi|_{\mathbb{Q}_2^\times}$ is trivial. In particular, $\chi(\varpi)$ must be 1. Conversely, $\chi|_{\mathbb{Q}_2^\times}$ is trivial when $\chi(\varpi) = 1$.

On the other hand, [26] introduces the Galois closure L of K, which is the splitting field of $K/\mathbb{Q}_2$. Then the 21-dimensional representation ρ of $W_{\mathbb{Q}_2}$ is introduced, which is given by $\mathrm{Ind}_{L/\mathbb{Q}_2}(\eta)$, where η is a quadratic character of $L^\times$ taking value 1 at the uniformizer ϖ and giving on restriction to U_L^1 any non-trivial character trivial on U_L^2 (there are 7 of them, any of which induces to ρ). Then ρ splits into the sum of three irreducible representations of dimension 7, only one of which is self-dual.

But we can take $\eta = \chi \circ N_{L/K}$, which shows that σ is the self-dual irreducible component of ρ. That proves what we claimed. □

The above arguments can be generalized to any 2-adic field F as a base field.

PROPOSITION 5.2. *Let π be a simple supercuspidal representation of $\mathrm{Sp}_6(F)$ and σ be the corresponding representation of W_F, which is an orthogonal irreducible representation of dimension 7. Then σ takes values (up to conjugation) in the subgroup I of $G_2(\mathbb{C})$, and its image is then either I or its subgroup of index 3.*

PROOF. Again by [22] (cf. [10]), σ is given by $\mathrm{Ind}_{K/F}(\chi)$, where K/F is a totally ramified extension of degree 7 and χ is a quadratic character of $K^\times$ with $\mathrm{Sw}(\chi) = 1$.

Let q_F be the cardinality of k_F. We first consider the case where $7 \nmid (q_F - 1)$. In this case, there is a unique such extension K up to isomorphism, generated by a 7th root Π of a uniformizer of F. Its Galois closure K'/F is KF' where F'/F is the unramified extension of degree 3 obtained by adjoining 7th roots of unity. Then we have

$$\mathrm{Gal}(K'/F) \cong \mathrm{Gal}(K'/F') \rtimes \mathrm{Gal}(K'/K),$$

where the inertia subgroup $\mathrm{Gal}(K'/F')$ is cyclic of order 7. The Frobenius element of $\mathrm{Gal}(K'/K)$ acts on $\mathrm{Gal}(K'/F')$ by taking q_F-th powers, an order 3 automorphism of $\mathrm{Gal}(K'/F')$.

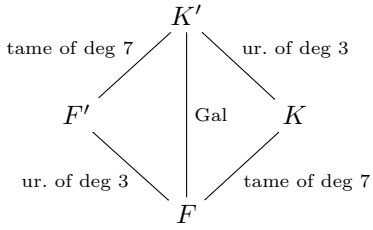

The possible inducing characters of $K^\times$, to get by induction to W_F an irreducible special orthogonal representation with Swan exponent 1, are the quadratic characters χ non-trivial on U_F^1 but trivial on U_F^2, and taking the value 1 on the uniformizer Π. There are $q_F - 1$ of them, as it should. Consider

the character $\chi' = \chi \circ \mathrm{Nr}_{K'/K}$ of $K'^{\times}$, which induces to $W_{F'}$ the restriction σ' of σ. We identify the residue field $k_{K'}$ of K' with $U^1_{K'}/U^2_{K'}$ by the map

$$U^1_{K'}/U^2_{K'} \cong k_{K'} : 1 + \Pi x \mapsto \overline{x} \quad (x \in \mathcal{O}_{K'}).$$

The action of $\mathrm{Gal}(K'/F')$ is given by multiplication by 7th roots of 1, reflecting the action on Π, and $\mathrm{Gal}(K'/K)$ acts by its natural action on $k_{K'} = k_{F'}$. The field $k_{F'}$ is an extension of $\mathbb{F}_8$, and the action of $\mathrm{Gal}(K'/F')$ by 7th roots of 1 is an action via a morphism into $\mathbb{F}_8^{\times}$. It follows that the restriction of σ to $W_{K'}$, which is the direct sum of all conjugates of χ', factors through the quotient of $k_{F'}$ by an $\mathbb{F}_8$ hyperplane, and in particular its image is a line over $\mathbb{F}_8$. It follows again that the image of σ is isomorphic to I.

We next consider the case where $7|(q_F - 1)$. In this case, the situation is simpler, as K/F is cyclic of degree 7. A similar, but simpler, analysis goes through to show that the image of σ is isomorphic to the index 3 subgroup of I. □

Remark 5.3. Proposition 5.2 guarantees only that the L-parameter of any simple supercuspidal representation of $\mathrm{Sp}_6(F)$ is obtained by lifting an L-parameter of G_2. Thus, a priori, it is possible that two inequivalent (i.e., not $G_2(\mathbb{C})$-conjugate) L-parameters of G_2 lift to the L-parameter of a simple supercuspidal representation of $\mathrm{Sp}_6(F)$. However, it does not happen since any two subgroups of $G_2(\mathbb{C})$ which are conjugate in $\mathrm{GL}_7(\mathbb{C})$ are conjugate also in $G_2(\mathbb{C})$ ([17, 1.2 Corollary 1]). We would like to thank the referee for pointing us to the reference [17].

Remark 5.4. In fact, when $p \neq 2$, at most the half of the L-parameters of Sp_6 corresponding to simple supercuspidal representations come from G_2. When $p > 3$, we can check that indeed exactly the half of them come from G_2. Moreover, any such L-parameter comes from G_2 if and only if the central character of a simple supercuspidal representation of Sp_6 contained in the corresponding L-packet is trivial. Some details will appear in an ongoing work of the second author with Yoichi Mieda.

Appendix A. Some basic facts on representations of finite groups

In this section, we collect some basic facts on representations of finite groups. The facts introduced in this section might be well-known, but we give proofs for the sake of completeness.

A.1. *Symmetric and Exterior squares of induced representations.* Let G be a finite group and H a subgroup of G of index 2. We fix an element γ of $G \setminus H$. Let σ be a representation of H. If we put

$$\begin{cases} \tau(h)(v_1 \otimes v_2) := (\sigma(h)v_1) \otimes (\sigma^{\gamma}(h)v_2) \\ \tau(\gamma h)(v_1 \otimes v_2) := (\sigma^{\gamma}(h)v_2) \otimes (\sigma(\gamma^2)\sigma(h)v_1) \end{cases}$$

for any $h \in H$, then it can be easily checked that τ is a representation of G which extends the representation $\sigma \otimes \sigma^\gamma$ of H.

PROPOSITION A.1. *We put $\rho := \mathrm{Ind}_H^G(\sigma)$. Let ω be the non-trivial character of G/H. Then we have*

1. $\wedge^2\rho \cong \mathrm{Ind}_H^G(\wedge^2\sigma) \oplus \tau \otimes \omega$.
2. $\mathrm{Sym}^2 \rho \cong \mathrm{Ind}_H^G(\mathrm{Sym}^2 \sigma) \oplus \tau$.

We first show some lemmas.

LEMMA A.2. *Let V_1 and V_2 be finite dimensional $\mathbb{C}$-vector spaces equipped with isomorphisms $I_1 \colon V_1 \to V_2$ and $I_2 \colon V_2 \to V_1$. If we define an automorphism $I_1 \otimes I_2$ of $V_1 \otimes V_2$ by $I_1 \otimes I_2(v_1 \otimes v_2) := I_2(v_2) \otimes I_1(v_1)$, then we have*

$$\mathrm{Tr}(I_1 \otimes I_2 \mid V_1 \otimes V_2) = \mathrm{Tr}(I_2 \circ I_1 \mid V_1).$$

PROOF. We take a $\mathbb{C}$-basis $\{e_1, \dots, e_n\}$ of V_1 and define a $\mathbb{C}$-basis $\{e'_1, \dots, e'_n\}$ of V_2 by $e'_i := I_1(e_i)$. Then $\{e_j \otimes e'_j\}_{1 \le i,j \le n}$ forms a $\mathbb{C}$-basis of $V_1 \otimes V_2$. Since we have

$$I_1 \otimes I_2(e_i \otimes e'_j) = I_2(e'_j) \otimes I_1(e_i) = (I_2 \circ I_1)(e_j) \otimes e'_i,$$

$e_i \otimes e'_j$ contributes to the trace of $I_1 \otimes I_2$ only when $i = j$ (see the matrix in the basis $\{e_j \otimes e'_j\}_{1 \le i,j \le n}$). Moreover, the contribution is exactly that of e_i to the trace of $I_2 \circ I_1$ (seen in the basis $\{e_i\}_{1 \le i \le n}$). ∎

LEMMA A.3. 1. *We have $\mathrm{Tr}(\sigma)(g^2) = \mathrm{Tr}(\sigma^\gamma)(g^2)$ for any $g \in G$, where γ is a(ny) element of $G \smallsetminus H$.*
2. *We have*

$$\mathrm{Tr}(\tau)(g) = \begin{cases} \mathrm{Tr}(\sigma)(g) \cdot \mathrm{Tr}(\sigma^\gamma)(g) & \text{if } g \in H, \\ \mathrm{Tr}(\sigma)(g^2) & \text{if } g \in G \smallsetminus H. \end{cases}$$

PROOF. We show (1). When $g \in G \smallsetminus H$, by writing $g = h\gamma$ with $h \in H$, we get $\gamma g^2 \gamma^{-1} = \gamma h \gamma h = h^{-1} g^2 h$. In particular, $\gamma g^2 \gamma^{-1}$ and g^2 are conjugate in H. Hence we have $\mathrm{Tr}(\sigma^\gamma)(g^2) = \mathrm{Tr}(\sigma)(g^2)$.

We next show (2). As τ is an extension of $\sigma \otimes \sigma^\gamma$, the equality $\mathrm{Tr}(\tau)(g) = \mathrm{Tr}(\sigma)(g) \cdot \mathrm{Tr}(\sigma^\gamma)(g)$ for $g \in H$ is obvious. For the case where $g = \gamma h \in G \smallsetminus H$, by Lemma A.2, we get

$$\mathrm{Tr}(\tau)(g) = \mathrm{Tr}(\sigma(\gamma^2)\sigma(h)\sigma^\gamma(h)) = \mathrm{Tr}(\sigma)(\gamma^2 h \gamma h \gamma^{-1}) = \mathrm{Tr}(\sigma^\gamma)(g^2) = \mathrm{Tr}(\sigma)(g^2),$$

where we used (1) in the last equality. ∎

PROOF OF PROPOSITION A.1. By noting that $\rho \otimes \rho \cong \mathrm{Sym}^2 \rho \oplus \wedge^2 \rho$ and $\Psi^2 \rho \cong \mathrm{Sym}^2 \rho - \wedge^2 \rho$ (and that the same is true for σ), it suffices to show that

(1') $\rho \otimes \rho \cong \mathrm{Ind}_H^G(\sigma \otimes \sigma) \oplus \tau \oplus \tau \otimes \omega$ and
(2') $\Psi^2 \rho \cong \mathrm{Ind}_H^G(\Psi^2 \sigma) \oplus \tau - \tau \otimes \omega$.

We first note that the Frobenius formula for induced representations implies that

$$\mathrm{Tr}(\rho)(g) = \begin{cases} \mathrm{Tr}(\sigma)(g) + \mathrm{Tr}(\sigma^\gamma)(g) & \text{if } g \in H, \\ 0 & \text{if } g \in G \smallsetminus H. \end{cases}$$

Thus, we have

$$\mathrm{Tr}(\rho \otimes \rho)(g) = \mathrm{Tr}(\rho)(g)^2 = \begin{cases} (\mathrm{Tr}(\sigma)(g) + \mathrm{Tr}(\sigma^\gamma)(g))^2 & \text{if } g \in H, \\ 0 & \text{if } g \in G \smallsetminus H, \end{cases}$$

and

$$\mathrm{Tr}(\Psi^2\rho)(g) = \mathrm{Tr}(\rho)(g^2) = \mathrm{Tr}(\sigma)(g^2) + \mathrm{Tr}(\sigma^\gamma)(g^2)$$

where we note that g^2 always belongs to H in the last equality. Similarly, we have

$$\begin{aligned} \mathrm{Tr}(\mathrm{Ind}_H^G(\sigma \otimes \sigma))(g) &= \begin{cases} \mathrm{Tr}(\sigma \otimes \sigma)(g) + \mathrm{Tr}((\sigma \otimes \sigma)^\gamma)(g) & \text{if } g \in H, \\ 0 & \text{if } g \in G \smallsetminus H, \end{cases} \\ &= \begin{cases} \mathrm{Tr}(\sigma)(g)^2 + \mathrm{Tr}(\sigma^\gamma)(g)^2 & \text{if } g \in H, \\ 0 & \text{if } g \in G \smallsetminus H, \end{cases} \end{aligned}$$

and

$$\begin{aligned} \mathrm{Tr}(\mathrm{Ind}_H^G(\Psi^2\sigma))(g) &= \begin{cases} \mathrm{Tr}(\Psi^2\sigma)(g) + \mathrm{Tr}(\Psi^2\sigma^\gamma)(g) & \text{if } g \in H, \\ 0 & \text{if } g \in G \smallsetminus H, \end{cases} \\ &= \begin{cases} \mathrm{Tr}(\sigma)(g^2) + \mathrm{Tr}(\sigma^\gamma)(g^2) & \text{if } g \in H, \\ 0 & \text{if } g \in G \smallsetminus H. \end{cases} \end{aligned}$$

Thus, the identities (1') and (2') follows by using Lemma A.3. □

A.2. *Faithful irreducible representation of a p-group.*

LEMMA A.4. *Let G be a p-group. If G has a faithful irreducible representation, then the center $Z(G)$ of G is a non-trivial cyclic group.*

PROOF. Suppose that ρ is a faithful irreducible representation of G. It is well-known that any p-group has a non-trivial center (see, e.g., [31, Theorem 14 in Chapter 8]). Thus $Z(G)$ is a non-trivial finite abelian p-group. If we let ω_ρ be the central character of ρ, then ω_ρ is also faithful. However, $Z(G)$ must be cyclic so that $Z(G)$ has a faithful 1-dimensional character. □

A.3. *Representations of a certain p-group.* Let p be a prime number. Let H be a finite p-group and $Z(H)$ its center. We assume that H is non-abelian and that there exists a subgroup $Z \subset Z(H)$ satisfying the following conditions:

1. Z is cyclic of order p, and
2. H/Z is an elementary abelian p-group.

We remark that G is said to be an *extra-special p-group* if Z can be taken to be $Z(H)$.

We note that, by the condition (2), the image of the commutator map $H \times H \to H\colon (x, y) \mapsto xyx^{-1}y^{-1}$ lies in Z. Thus, by fixing an identification $Z \cong \mathbb{F}_p$, we obtain a symplectic form (i.e., non-degenerate alternating bilinear form) on $H/Z(H)$

$$\langle -, - \rangle\colon H/Z(H) \times H/Z(H) \to \mathbb{F}_p.$$

We take a maximal totally isotropic subspace $U \subset H/Z(H)$ with respect to $\langle -, - \rangle$. We let H' be the preimage of U in H, which is abelian.

The following proposition is given in [9, 16.4 Lemma 2] in the case where $Z = Z(H)$ (in fact, it is allowed that $Z = Z(H)$ is any finite cyclic group in *loc. cit.*).

PROPOSITION A.5. *For any character χ of $Z(H)$ whose restriction to Z is non-trivial, there uniquely (up to isomorphism) exists an irreducible representation ρ_χ of H on which $Z(H)$ acts via χ. Moreover, ρ_χ is explicitly given by $\mathrm{Ind}_{H'}^{H}(\chi')$ for any character χ' of H' extending χ (note that such χ' can be always taken since H' is abelian).*

PROOF. We just reproduce the proof of [9, 16.4 Lemma 2] in our setting.

The center $Z(H)$ obviously acts on $\mathrm{Ind}_{H'}^{H}(\chi')$ via χ. Thus let us next check that $\mathrm{Ind}_{H'}^{H}(\chi')$ is irreducible. Since H' is normal in H, it suffices to show that any element $h \in H$ satisfying $(\chi')^h = \chi'$ lies in H'. If $h \in H$ is such an element, we have $\chi'(hh'h^{-1}h'^{-1}) = 1$ for any $h' \in H'$. Since χ' extends the character χ of Z, which is faithful, this implies that $hh'h^{-1}h'^{-1} = 1$ for any $h' \in H'$. As H' is the preimage of the maximal totally isotropic subspace U of $H/Z(H)$ with respect to $\langle -, - \rangle$, we see that h must belongs to H'.

Let us finally show the uniqueness of ρ_χ by a counting argument. For this, we let $|H/Z(H)| = p^{2d}$ and $|Z(H)/Z| = p^r$, hence $|H| = p^{2d+r+1}$. Note that

$$\begin{aligned} |H| &= \sum_{\rho\colon \text{ irr. rep. of } H} (\dim \rho)^2 \\ &= \sum_{\substack{\rho\colon \text{ irr. rep. of } H \\ \text{trivial on } Z}} (\dim \rho)^2 + \sum_{\substack{\rho\colon \text{ irr. rep. of } H \\ \text{non-trivial on } Z}} (\dim \rho)^2. \end{aligned}$$

Since H/Z is abelian, the first term is simply given by $|H/Z| = p^{2d+r}$. On the other hand, by noting that $\dim(\mathrm{Ind}_{H'}^{H}(\chi'))^2 = p^{2d}$ and that the number of characters of $Z(H)$ non-trivial on Z is given by $p^r(p-1)$, we see that the second term is bounded below by $p^{2d+r}(p-1)$. Thus we get $|H| \geq p^{2d+r+1}$. However, we already know that $|H| = p^{2d+r+1}$. Therefore, we conclude that the representations $\mathrm{Ind}_{H'}^{H}(\chi')$ exhausts all irreducible representations of H whose restrictions to Z are non-trivial. □

Acknowledgements.

The authors would like to thank Yoichi Mieda and Gordan Savin for helpful suggestions and discussions on the content of Section 5. The authors also would like to express their sincere gratitude to the anonymous referee for giving them constructive advices on this paper. This paper was written as the first author was enjoying the hospitality of the Graduate School of Mathematical Sciences of the University of Tokyo. He also thanks the Department of Mathematics of Kyoto University for an invitation. The second author was supported by JSPS KAKENHI Grant Number 20K14287.

References

[1] M. Adrian, G. Henniart, E. Kaplan and M. Oi, *Simple supercuspidal L-packets of split special orthogonal groups over dyadic fields*, preprint, `arXiv:2305.09076`, 2023.

[2] U. K. Anandavardhanan and A. K. Mondal, *On the conductor of certain local L-functions*, J. Ramanujan Math. Soc. **31** (2016), 137–156.

[3] J. Arthur, *Unipotent automorphic representations: conjectures*, Astérisque (1989), no. 171-172, 13–71.

[4] J. Arthur, The endoscopic classification of representations: Orthogonal and symplectic groups, American Mathematical Society Colloquium Publications, vol. **61**, American Mathematical Society, Providence, RI, 2013.

[5] R. Beuzart-Plessis, *On the formal degree conjecture for classical groups*, Oberwolfach Rep., Automorphic forms, geometry and arithmetic (hybrid meeting) **18** (2021), no. 3, 2096–2101.

[6] J. P. Buhler, Icosahedral Galois representations, Lecture Notes in Math., Vol. **654**, Springer-Verlag, Berlin-New York, 1978.

[7] C. J. Bushnell and A. Fröhlich, Gauss sums and p-adic division algebras, Lecture Notes in Math., Vol. **987**, Springer-Verlag, Berlin-New York, 1983.

[8] C. J. Bushnell and G. Henniart, *Local tame lifting for* $\mathrm{GL}(N)$*. I. Simple characters*, Inst. Hautes Études Sci. Publ. Math. (1996), no. 83, 105–233.

[9] C. J. Bushnell and G. Henniart, The local Langlands conjecture for GL(2), Grundlehren der Mathematischen Wissenschaften, vol. **335**, Springer-Verlag, Berlin, 2006.

[10] C. J. Bushnell and G. Henniart, *The essentially tame Jacquet-Langlands correspondence for inner forms of* $\mathrm{GL}(n)$, Pure Appl. Math. Q. **7** (2011), no. 3, Special Issue: In honor of Jacques Tits, 469–538.

[11] C. J. Bushnell and G. Henniart, *Strong exponent bounds for the local Rankin-Selberg convolution*, Bull. Iranian Math. Soc. **43** (2017), 143–167.

[12] C. J. Bushnell and G. Henniart, *Local Langlands correspondence and ramification for Carayol representations*, Compos. Math. **155** (2019), 1959–2038.

[13] C. J. Bushnell, G. M. Henniart and P. C. Kutzko, *Local Rankin-Selberg convolutions for* GL_n*: explicit conductor formula*, J. Amer. Math. Soc. **11** (1998), 703–730.

[14] C. J. Bushnell and P. C. Kutzko, The admissible dual of $\mathrm{GL}(N)$ via compact open subgroups, Ann. of Math. Stud., vol. **129**, Princeton University Press, Princeton, NJ, 1993.

[15] P. Deligne, *Les constantes des équations fonctionnelles des fonctions L*, in: Modular functions of one variable, II (Proc. Internat. Summer School, Univ. Antwerp, Antwerp, 1972), Lecture Notes in Math., Vol. **349**, Springer-Verlag, Berlin-New York, 1973, pp. 501–597.

[16] B. H. Gross and M. Reeder, *Arithmetic invariants of discrete Langlands parameters*, Duke Math. J. **154** (2010), 431–508.
[17] R. L. Griess, Jr., *Basic conjugacy theorems for G_2*, Invent. Math. **121** (1995), 257–277.
[18] M. Harris and R. Taylor, The geometry and cohomology of some simple Shimura varieties, With an appendix by Vladimir G. Berkovich, Annals of Mathematics Studies, vol. 151, Princeton University Press, Princeton, NJ, 2001.
[19] G. Henniart, *Représentations du groupe de Weil d'un corps local*, Enseign. Math. (2) **26** (1980), 155–172.
[20] G. Henniart, *Une preuve simple des conjectures de Langlands pour* $\mathrm{GL}(n)$ *sur un corps p-adique*, Invent. Math. **139** (2000), 439–455.
[21] G. Henniart, *Cuspidal representations of* $\mathrm{Sp}(2n, \mathbb{Q}_2)$ *with irreducible Galois parameter*, appendix to "Local transfer for quasi-split classical groups and congruences mod ℓ" by Mínguez and Sécherre, preprint, `arXiv:2302.04532`, 2023.
[22] G. Henniart and M. Oi, *Simple supercuspidal L-packets of symplectic groups over dyadic fields*, preprint, `arXiv:2207.12985`, 2022.
[23] K. Hiraga, A. Ichino and T. Ikeda, *Correction to: "Formal degrees and adjoint γ-factors"*, J. Amer. Math. Soc. **21** (2008), 1211–1213.
[24] K. Hiraga, A. Ichino and T. Ikeda, *Formal degrees and adjoint γ-factors*, J. Amer. Math. Soc. **21** (2008), 283–304.
[25] A. Ichino, E. Lapid, and Z. Mao, *On the formal degrees of square-integrable representations of odd special orthogonal and metaplectic groups*, Duke Math. J. **166** (2017), 1301–1348.
[26] C. Khare, M. Larsen, and G. Savin, *Functoriality and the inverse Galois problem. II. Groups of type B_n and G_2*, Ann. Fac. Sci. Toulouse Math. (6) **19** (2010), 37–70.
[27] Y. Kiliç, Inequalities on Swan conductors, Thesis, Laboratoire de Mathématiques d'Orsay, 2020, `https://theses.hal.science/tel-02612976/`.
[28] Y. Mieda, *On the formal degree conjecture for simple supercuspidal representations*, Math. Res. Lett. **28** (2021), 1227–1242.
[29] M. Oi, *Simple supercuspidal L-packets of quasi-split classical groups*, `arXiv:1805.01400`, to appear in Mem. Amer. Math. Soc.
[30] D. Prasad, *Some remarks on representations of a division algebra and of the Galois group of a local field*, J. Number Theory **74** (1999), 73–97.
[31] J.-P. Serre, Linear representations of finite groups, Translated from the second French edition by Leonard L. Scott, Graduate Texts in Mathematics, Vol. **42**, Springer-Verlag, New York-Heidelberg, 1977.
[32] J.-P. Serre, Local fields, Translated from the French by Marvin Jay Greenberg, Graduate Texts in Mathematics, vol. **67**, Springer-Verlag, New York-Berlin, 1979.
[33] J. Tate, *Number theoretic background*, in: Automorphic forms, representations and L-functions (Proc. Sympos. Pure Math., Oregon State Univ., Corvallis, Ore., 1977), Part 2, Proc. Sympos. Pure Math., XXXIII, American Mathematical Society, Providence, RI, 1979, pp. 3–26.

O Swanovim eksponentima simetričnih i anti-simetričnih kvadrata Galoisovih reprezentacija

Guy Henniart i Masao Oi

Sažetak. Neka je F lokalno nearhimedsko polje i E konačno Galoisovo proširenje polja F, čija je Galoisova grupa G. Ako je ρ reprezentacija grupe G na kompleksnom vektorskom prostoru V, onda možemo komponirati ρ s bilo kojom tenzorskom operacijom R na V. Na taj način dobijemo novu reprezentaciju $R \circ \rho$. U ovom radu proučavamo odnos između Swanovih eksponenata $\mathrm{Sw}(\rho)$ i $\mathrm{Sw}(R \circ \rho)$. Posebno diskutiramo slučaj kada je R simetrični ili antisimetrični kvadrat. Ovi slučajevi su od posebnog interesa u lokalnoj Langlandsovoj korespondenciji rascjepivih klasičnih grupa definiranih nad F, preko slutnje o formalnim stupnjevima. Vezano za to, dajemo eksplicitan opis Langlandsovog parametra jednostavnih kuspidalnih reprezentacija. Za ireducibilnu reprezentaciju ρ, glavni rezultati ovog rada određuju $\mathrm{Sw}(\mathrm{Sym}^2 \rho)$ i $\mathrm{Sw}(\wedge^2 \rho)$ iz $\mathrm{Sw}(\rho)$ kada je rezidualna karakteristika p polja F neparna, a u slučaju $p = 2$ ograničava ih u terminima of $\mathrm{Sw}(\rho)$. U posljednjem slučaju dajemo i slutnju koja sadrži bolju ogradu za koju dajemo neke argumente za istinitost.

Guy Henniart
Laboratoire de Mathématiques d'Orsay
Université Paris-Saclay, CNRS
91405, Orsay, France
E-mail: Guy.Henniart@math.u-psud.fr

Masao Oi
Department of Mathematics (Hakubi center)
Kyoto University
Kitashirakawa, Oiwake-cho, Sakyo-ku, Kyoto, Japan
E-mail: masaooi@math.kyoto-u.ac.jp

Received: 27.7.2023.
Revised: 15.10.2023.
Accepted: 14.11.2023.

RAD HAZU. MATEMATIČKE ZNANOSTI
Vol. 28 = 558 (2024): 185-192
DOI: https://doi.org/10.21857/y54jof4o2m

AN ELLIPTIC CURVE OVER $\mathbb{Q}(u)$ WITH TORSION $\mathbb{Z}/4\mathbb{Z}$ AND RANK 6

Andrej Dujella and Juan Carlos Peral

Dedicated to Marko Tadić on the occasion of his 70th birthday

Abstract. In this paper, we present the construction of an elliptic curve over $\mathbb{Q}(u)$ with torsion group $\mathbb{Z}/4\mathbb{Z}$ and rank 6. Previously only rank 5 examples for such curves were known.

1. Introduction

Let E be an elliptic curve over $\mathbb{Q}$. By the Mordell-Weil theorem, the group $E(\mathbb{Q})$ of rationals points on E is a finitely generated Abelian group. Hence, it has the form $E(\mathbb{Q}) \cong E(\mathbb{Q})_{\text{tors}} \times \mathbb{Z}^r$, where $E(\mathbb{Q})_{\text{tors}}$ is called the torsion group of E, and the non-negative integer r is called the rank of E.

In 1978, Mazur [18] proved that there are precisely 15 possible torsion groups for elliptic curves over $\mathbb{Q}$:

$$\begin{aligned} \mathbb{Z}/k\mathbb{Z}, &\qquad \text{for } k = 1, 2, 3, 4, 5, 6, 7, 8, 9, 10, 12, \\ \mathbb{Z}/2\mathbb{Z} \times \mathbb{Z}/k\mathbb{Z}, &\qquad \text{for } k = 2, 4, 6, 8. \end{aligned}$$

On the other hand, it is not known which values of rank r are possible for elliptic curves over $\mathbb{Q}$. It has been conjectured that there exist elliptic curves of arbitrarily high rank, even that for each of the torsion groups in Mazur's theorem, there exist curves with that torsion group and arbitrarily large rank. However, there are also recent heuristic arguments that suggest the boundedness of the rank of elliptic curves. According to this heuristic, only a finite number of curves would have rank higher than 21 (see [19]). The current record is an example of an elliptic curve over $\mathbb{Q}$ with rank ≥ 28, found by Elkies in 2006 (see [7] and also [16], where it is shown that, assuming the generalized Riemann hypothesis, Elkies's curve has rank equal to 28).

2020 *Mathematics Subject Classification.* 11G05.
Key words and phrases. Elliptic curves, rank, torsion group.

The first step in finding elliptic curves with large rank is usually constructing a parametric family of elliptic curves, i.e. an elliptic curve over the field of rational function $\mathbb{Q}(u)$, with the considered property (e.g. with a given torsion group). Thus, it is of interest to construct elliptic curves over $\mathbb{Q}(u)$ with a given torsion group and relatively large generic rank.

In this paper, we will present the construction of an elliptic curve over $\mathbb{Q}(u)$ with torsion group $\mathbb{Z}/4\mathbb{Z}$ and rank 6, which is the current record for the rank over $\mathbb{Q}(u)$ for this torsion group. Let us mention that the largest known rank for an elliptic curve with torsion group $\mathbb{Z}/4\mathbb{Z}$ over $\mathbb{Q}$ is 13 (see [8]). Information on current rank records for all 15 possible torsion groups can be found in [2]. For results on high-rank elliptic curves with given torsion group over quadratic fields, see, e.g. [1, 11].

2. General equation of curves with torsion group $\mathbb{Z}/4\mathbb{Z}$

The general model of an elliptic curve with torsion group $\mathbb{Z}/4\mathbb{Z}$ is given by

$$Y^2 + aXY + abY = X^3 + bX^2,$$

where $ab(a^2 - 16b) \neq 0$ (see, e.g. [7]). A torsion point of order 4 in this model is $(0, 0)$.

We will use the construction of Elkies [7] for curves with torsion group $\mathbb{Z}/4\mathbb{Z}$. Elkies noticed that this torsion and rank 4 can be obtained for some elliptic $K3$ surfaces. In this case, the maximum rank is obtained with the following types of reducible fibers for such a surface: four of type I_4, two of type I_2 and four of type I_1, so giving a contribution to the Néron-Severi group of $4(4-1) + 2(2-1)) = 14$. Hence, the rank over this surface is at most $20 - 2 - 14 = 4$ (since the Néron-Severi rank of a $K3$ surface is at most 20, see, e.g. [20]). So, in this sense, the Elkies example is optimal.

3. Elkies' model for rank 4

By the result of Inose [12], we know that the Néron-Severi rank can be 20 only if the corresponding discriminant is one of the thirteen discriminants of imaginary quadratic orders of class number 1. Elkies [7] has shown that the discriminant -163 surface does have an elliptic model that attains rank 4 with torsion group $\mathbb{Z}/4\mathbb{Z}$ for the following values of parameters a and b:

$$a = (8t - 1)(32t + 7),$$
$$b = 8(t + 1)(15t - 8)(31t - 7).$$

With a simple change of variables, the surface can be written as

$$Y^2 = X^3 + (a^2 - 8b)X^2 + 16b^2X.$$

Inserting the values of a and b given above, one gets the following elliptic $K3$ surface

$$E:\ Y^2 = X^3 + (65536t^4 - 17472t^3 - 10176t^2 + 18672t - 3535)X^2 + 1024(t+1)^2(15t-8)^2(31t-7)^2X.$$

It has torsion group $\mathbb{Z}/4\mathbb{Z}$ and rank 4. A torsion point of order 4 in this model is

$$(32(t+1)(15t-8)(31t-7),\ 32(t+1)(8t-1)(15t-8)(31t-7)(32t+7))$$

and the X-coordinates of four independent points of infinite order are

$$\begin{aligned} X_1 &= -361(t+1)(31t-7),\\ X_2 &= -4(t+1)(15t-8)(16t-7)^2,\\ X_3 &= -16(t+1)(8t+7)^2(15t-8),\\ X_4 &= 4(15t-8)(16t+1)^2(31t-7). \end{aligned}$$

In [8], it is quoted that for

$$\begin{aligned} a &= 4(80t+9),\\ b &= \frac{1}{2}(t-2)(2t-81)(2t-1)(18t-1). \end{aligned}$$

the resulting $K3$ surface also has rank 4.

Previous to the Elkies construction in 2007, in 2004, Kihara [14, 15] and Lecacheux [17] found curves with rank 4 and 5 over $\mathbb{Q}(u)$. The coefficients in the Kihara and Lecacheux constructions are much larger than those in Elkies examples, and so they are less suited for finding particular good examples of high-rank curves. In fact, the family with rank 4 in the Elkies paper is $y^2 = x^3 + A(t)x^2 + B(t)x$, where $A(t)$ is a polynomial of degree 4 and $B(t)$ is a polynomial of degree 6, and the examples with rank 5 have polynomial coefficients of degree 8 and 16, while the corresponding coefficients in the Kihara family have degrees 52 and 102, respectively. In 2016, Khoshnam and Moody [13] gave an example of rank 5 over $\mathbb{Q}(u)$ with a simpler version of the Kihara method. In fact, the coefficients A and B in this curve are polynomials of degrees 19 and 38, respectively.

The object of this note is to construct an example of an elliptic curve over $\mathbb{Q}(u)$ with torsion $\mathbb{Z}/4\mathbb{Z}$ and rank 6. It will be obtained as a specialization of the Elkies surface.

4. A curve over $\mathbb{Q}(u)$ with torsion $\mathbb{Z}/4\mathbb{Z}$ and rank 6

Elkies [7] mentions, without explicitly writing such examples, that there are several quadratic sections giving curves over $\mathbb{Q}(u)$ with rank 5 for this torsion and several combinations of pairs of quadratic sections leading to

infinite families of curves with rank 6 parametrized by the points of elliptic curves of positive rank.

In [6], we made explicit the ideas of Elkies, and presented 25 elliptic curves over $\mathbb{Q}(u)$ with rank 5 and several infinite families of curves with rank 6 parametrized by elliptic curves with positive rank.

Now we have many more examples of quadratic sections over $\mathbb{Q}(u)$ leading to rank 5 curves. In one of these curves, we found a further quadratic section leading to the curve over $\mathbb{Q}(u)$ having rank 6.

In fact, observe that imposing

$$\frac{-64(t+1)^2(7t-4)(17t+4)}{(4t+1)^2}$$

as the X-coordinate of a new point in the Elkies surface E is equivalent to the condition $-(7t-4)(17t+4) = \square$, which can be solved with

$$t \mapsto \frac{4(u^2-1)}{(7u^2+17)}.$$

The resulting curve has rank 5. (For a general strategy for imposing new points which might lead to conditions equivalent to genus 0 or 1 curves, see, e.g. [5].)

On the other hand, imposing

$$\frac{576(7t-4)(15t-8)^2(5551t-1324)}{49(28t-39)^2}$$

as the X-coordinate of a new point in the Elkies surface E is equivalent to the condition $(7t-4)(5551t-1324) = \square$, which can be solved with

$$t \mapsto \frac{4(u^2-331)}{7(u^2-793)}.$$

The corresponding specialization also has rank 5.

Now we observe that in both conditions

$$\begin{aligned} -(7t-4)(17t+4) &= \square \\ (7t-4)(5551t--1324) &= \square, \end{aligned}$$

the same factor $(7t-4)$ appears. This implies that both conditions can be satisfied simultaneously since when we apply the solution of the first condition to the second, we have to solve $-(539u^2-1863) = z^2$ in order to satisfy both conditions. This genus 0 curve has rational points, i.e. $(u,z) = (13/7, 2)$, so we can find the parametric solution

$$u \mapsto \frac{13r^2-28r-7007}{7(r^2+539)}.$$

So we can satisfy both conditions with

$$t \mapsto \frac{4\left(3r^2-14r-5390\right)\left(10r^2-14r-1617\right)}{7\left(72r^4-182r^3-13279r^2+98098r+20917512\right)}.$$

By inserting this into E, we get the curve over $\mathbb{Q}(r)$ given by

$$y^2 = x^3 + a_6(r)x^2 + b_6(r)x,$$

where

$$\begin{aligned}
a_6(r) = {} & 3(6637977907200r^{16} - 327957190299648r^{15} - 132939477324670464r^{14} + \\
& 1334557851651990784r^{13} + 7320520003754921924 8r^{12} - \\
& 1718125119359074284768r^{11} - 193538301177692188691736r^{10} + \\
& 190518955562616527788687 2r^9 + 96624855648992854220247819r^8 - \\
& 102689717048250308478102 4008r^7 - 56226940796444312350911834456r^6 + \\
& 269042619584910197333660344992r^5 + 617869834139793935422678253636 8r^4 - \\
& 607129353511324518060938011420 16r^3 - 325976699371446457995776649598 3104r^2 + \\
& 433449507015207722196845568379699 2r + 472874531616938964314617112005632 00),
\end{aligned}$$

$$\begin{aligned}
b_6(r) = {} & 7225344(r-224)^2(r+154)^2(2r-7)^2(32r+77)^2\left(18r^2+14r+16709\right)^2 \\
& \left(24r^2-1001r+14014\right)^2\left(26r^2+1001r+12936\right)^2\left(31r^2-14r+9702\right)^2 \\
& \left(72r^4-182r^3-13279r^2+98098r+20917512\right)^2.
\end{aligned}$$

The x-coordinates of six independent points of infinite order are

$$\begin{aligned}
x_1 = {} & -53067(r-224)(r+154)(2r-7)(32r+77)(24r^2-1001r+14014)\times \\
& (26r^2+1001r+12936)(72r^4-182r^3-13279r^2+98098r+20917512)^2, \\
x_2 = {} & -48(r-224)(r+154)(2r-7)(32r+77)(18r^2+14r+16709)\times \\
& (31r^2-14r+9702)(2424r^4-12922r^3-3840473r^2+6964958r+704222904)^2, \\
x_3 = {} & 144(16709+14r+18r^2)(14014-1001r+24r^2)(12936+1001r+26r^2)\times \\
& (9702-14r+31r^2)(155719256-490490r+1032283r^2+910r^3+536r^4)^2, \\
x_4 = {} & 576(16709+14r+18r^2)(14014-1001r+24r^2)(12936+1001r+26r^2)\times \\
& (9702-14r+31r^2)(434619416+2648646r-841477r^2-4914r^3+1496r^4)^2, \\
x_5 = {} & (12936+1001r+26r^2)^2(20917512+98098r-13279r^2-182r^3+72r^4)^2\times \\
& \frac{88510464(539+r^2)^2(-7007-28r+13r^2)^2(14014-1001r+24r^2)^2}{(285872664+2256254r-1029833r^2-4186r^3+984r^4)^2}, \\
x_6 = {} & (9702-14r+31r^2)^2(20917512+98098r-13279r^2-182r^3+72r^4)^2\times \\
& \frac{260112384(539+r^2)^2(-539+1001r+r^2)^2(16709+14r+18r^2)^2}{(676332888+2256254r+418999r^2-4186r^3+2328r^4)^2}.
\end{aligned}$$

Since the specification map is a homomorphism, to show that these six points are independent, it suffices to find a rational number r for which the points are specialized to six independent $\mathbb{Q}$-rational points. It is easy to check that we may take, e.g. $r = 1$.

Moreover, for $r = 13$, the conditions of the Gusić-Tadić algorithm for finding injective specializations (see [10, Theorem 1.3] and [9]) are satisfied, so the rank over $\mathbb{Q}(r)$ is exactly 6.

This specialization also indicates that the points $P_1, P_2, P_3, P_4, P_5, P_6$, where $x(P_i) = X_i$ for $i = 1, 2, \ldots, 6$, do not generate the full Mordell-Weil group over $\mathbb{Q}(r)$ modulo torsion, but a subgroup of order 4 (since the quotient of the corresponding regulators is 16). Indeed, it holds that $P_3+P_4+P_5 = 2R_5$ and $P_3 + P_4 + P_6 = 2R_6$, where

$$\begin{aligned}
x(R_5) &= 1344(72r^4 - 182r^3 - 13279r^2 + 98098r + 20917512)(2r - 7)^2(32r + 77)^2\times \\
&\quad (18r^2 + 14r + 16709)^2(11r^2 + 14r + 12936)^2, \\
x(R_6) &= 1344(18r^2 + 14r + 16709)(26r^2 + 1001r + 12936)(31r^2 - 14r + 9702)\times \\
&\quad (24r^2 - 1001r + 14014)(72r^4 - 182r^3 - 13279r^2 + 98098r + 20917512)\times \\
&\quad \frac{(r + 154)^2(32r + 77)^2(6r^2 - 91r + 3332)^2}{(30r^2 - 1001r + 17248)^2},
\end{aligned}$$

and now the points $P_1, P_2, P_3, P_4, R_5, R_6$ generate the full Mordell-Weil group over $\mathbb{Q}(r)$ modulo torsion.

5. Concluding remarks

Let us mention that the heuristic of Park, Poonen, Voight and Wood (see [19, Section 8.3]) predicts that there are only finitely many elliptic curves over $\mathbb{Q}$ with torsion group $\mathbb{Z}/4\mathbb{Z}$ and rank greater than 7, which indicates that our result might be close to the best possible.

However, the recent paper by Dujella, Kazalicki and Peral [4] might indicate that the heuristic in [19] needs some adjustments, at least in the case of curves with certain torsion groups. Namely, they examined families with rank 3 for torsion groups $\mathbb{Z}/8\mathbb{Z}$ and $\mathbb{Z}/2\mathbb{Z}\times\mathbb{Z}/6\mathbb{Z}$ and the experiments suggest that in these families, root numbers 1 and -1 (which conjecturally means even and odd ranks) are equidistributed, which would imply that there are infinitely many curves with rank ≥ 4 for these torsion groups, while the heuristic in [19] predicts that there are only finitely many elliptic curves over $\mathbb{Q}$ with torsion group $\mathbb{Z}/8\mathbb{Z}$ or $\mathbb{Z}/2\mathbb{Z} \times \mathbb{Z}/6\mathbb{Z}$ and rank greater than 3.

Acknowledgements. A. D. acknowledges support from the QuantiXLie Center of Excellence, a project co-financed by the Croatian Government and European Union through the European Regional Development Fund - the Competitiveness and Cohesion Operational Programme (Grant KK.01.1.1.01.0004).

References

[1] J. Aguirre, A. Dujella, M. Jukić Bokun and J. C. Peral, *High rank elliptic curves with prescribed torsion group over quadratic fields*, Period. Math. Hungar. **68** (2014), 222–230.

[2] A. Dujella, *High rank elliptic curves with prescribed torsion,* `https://web.math.pmf.unizg.hr/~duje/tors/tors.html`.

[3] A. Dujella, *Infinite families of elliptic curves with high rank and prescribed torsion,* `https://web.math.pmf.unizg.hr/~duje/tors/generic.html`.

[4] A. Dujella, M. Kazalicki and J. C. Peral, *Elliptic curves with torsion groups* $\mathbb{Z}/8\mathbb{Z}$ *and* $\mathbb{Z}/2\mathbb{Z} \times \mathbb{Z}/6\mathbb{Z}$, Rev. R. Acad. Cienc. Exactas Fis. Nat. Ser. A Math. RACSAM **115** (2021), Article 169, (24pp).

[5] A. Dujella and J. C. Peral, *Elliptic curves with torsion group* $\mathbb{Z}/8\mathbb{Z}$ *or* $\mathbb{Z}/2\mathbb{Z} \times \mathbb{Z}/6\mathbb{Z}$, in: Trends in Number Theory, Contemp. Math. **649** (2015), 47–62.

[6] A. Dujella and J. C. Peral, *Construction of high rank elliptic curves,* J. Geom. Analysis **31** (2021), 6698–6724.

[7] N. Elkies, *Three lectures on elliptic surfaces and curves of high rank,* `arXiv:0709.2908`, (2007).

[8] N. Elkies and Z. Klagsbrun, *New rank records for elliptic curves having rational torsion,* in: Proceedings of the Fourteenth Algorithmic Number Theory Symposium, Mathematical Sciences Publishers, Berkeley, 2020, pp. 233–250.

[9] I. Gusić and P. Tadić, *A remark on the injectivity of the specialization homomorphism*, Glas. Mat. Ser. III **47** (2012), 265–275.

[10] I. Gusić and P. Tadić, *Injectivity of the specialization homomorphism of elliptic curves*, J. Number Theory **148** (2015), 137–152.

[11] L. Halbeisen, N. Hungerbühler, A. Shamsi Zargar and M. Voznyy, *A geometric approach to elliptic curves with torsion groups* $\mathbb{Z}/10\mathbb{Z}$*,* $\mathbb{Z}/12\mathbb{Z}$*,* $\mathbb{Z}/14\mathbb{Z}$*, and* $\mathbb{Z}/16\mathbb{Z}$, Rad Hrvat. Akad. Znan. Umjet. Mat. Znan. **27** (2023), 87–109.

[12] H. Inose, *Defining equations of singular* $K3$ *surfaces and a notion of isogeny*, in: Proceedings of the International Symposium on Algebraic Geometry, Kinokuniya Book Store, Tokyo, 1978, pp. 495–502.

[13] F. Khoshnam and D. Moody, *High rank elliptic curves with torsion* $\mathbb{Z}/4\mathbb{Z}$ *induced by Kihara's elliptic curves,* Integers **16** (2016), Paper No. A70, 12 pp.

[14] S. Kihara, *On the rank of elliptic curves with a rational point of order* 4*,* Proc. Japan Acad. Ser A Math. Sci. **80** (2004), 26–27.

[15] S. Kihara, *On the rank of elliptic curves with a rational point of order* 4*. II,* Proc. Japan Acad. Ser A Math. Sci. **80** (2004), 158–159

[16] Z. Klagsbrun, T. Sherman and J. Weigandt, *The Elkies curve has rank* 28 *subject only to GRH*, Math. Comp. **88** (2019), 837–846

[17] O. Lecacheux, *Rang de courbes elliptiques dont le groupe de torsion est non trivial,* Ann. Sci. Math. Québec **28** (2004), 145–151

[18] B. Mazur, *Modular curves and the Eisenstein ideal*, Inst. Hautes Études Sci. Publ. Math. **47** (1977), 33–186.

[19] J. Park, B. Poonen, J. Voight and M. M. Wood, *A heuristic for boundedness of ranks of elliptic curves*, J. Eur. Math. Soc. (JEMS) **21** (2019), 2859–2903.

[20] M. Schütt and T. Shioda, Mordell-Weil Lattices, Springer, Singapore, 2019.

Eliptička krivulja nad $\mathbb{Q}(u)$ s torzijom $\mathbb{Z}/4\mathbb{Z}$ i rangom 6

Andrej Dujella i Juan Carlos Peral

Sažetak. U ovom radu prikazujemo konstrukciju eliptičke krivulje nad $\mathbb{Q}(u)$ s torzijskom grupom $\mathbb{Z}/4\mathbb{Z}$ i rangom 6. Prethodno su bili poznati samo primjeri ranga 5 za takve krivulje.

Andrej Dujella
Department of Mathematics
Faculty of Science
University of Zagreb
Bijenička cesta 30, 10000 Zagreb, Croatia
E-mail: duje@math.hr

Juan Carlos Peral
Departamento de Matemáticas
Universidad del País Vasco
Aptdo. 644, 48080 Bilbao, Spain
E-mail: juancarlos.peral@ehu.es

Received: 16.2.2023.
Revised: 6.6.2023.
Accepted: 13.6.2023.

RAD HAZU. MATEMATIČKE ZNANOSTI
Vol. 28 = 558 (2024): 193-222
DOI: https://doi.org/10.21857/mnlqgc3qqy

SIMILITUDE EXCEPTIONAL THETA CORRESPONDENCES

Petar Bakić, Wee Teck Gan and Gordan Savin

In honor of Marko Tadić
from whom we have learned so much

Abstract. We describe a systematic way of constructing dual pairs of similitude groups. We study the theta correspondences arising in this way and prove that Howe duality holds for the similitude dual pair if and only if it holds for the original reductive dual pair used in our construction. Several examples of exceptional correspondences are discussed.

1. Introduction

Let F be a local field and suppose (G, H) is a reductive dual pair in a simple linear algebraic group $\mathcal{E}$ over F. Hence, G and H are subgroups of $\mathcal{E}$ which are mutual centralizers of each other. We thus have a homomorphism of algebraic groups

$$i : G \times H \longrightarrow \mathcal{E}.$$

If Ω is a minimal representation of $\mathcal{E}(F)$, we may pull back Ω to the product group $G(F) \times H(F)$ and study the resulting branching problem: this is the usual setup of theta correspondence.

However, the map i is frequently not injective. Typically, one has (multiplicative type) central subgroups

$$Z \hookrightarrow G \quad \text{and} \quad Z \hookrightarrow H$$

which are identified under i. More precisely, one has

$$\mathrm{Ker}(i) = Z^{\nabla} = \{(z, z^{-1}) : z \in Z\},$$

so that one has an injecion

$$(G \times H)/Z^{\nabla} \hookrightarrow \mathcal{E}.$$

2020 *Mathematics Subject Classification.* 11S90, 17A75, 17C40.
Key words and phrases. theta correspondences, similitude groups.

This already occurs in the setting of the classical theta correspondence for the symplectic-orthogonal dual pair

$$i : \mathrm{O}(V) \times \mathrm{Sp}(W) \longrightarrow \mathrm{Sp}(V \otimes W)$$

whose kernel is the diagonally embedded $Z = \mu_2$.

In this short note, we explain how the non-injectivity of i can be exploited to extend the theta correspondence for $G(F) \times H(F)$ to the setting of similitude groups associated to G and H. Indeed, as we shall see, this non-injectivity is the reason for the existence of such a theory.

Here is a brief summary of the content of the paper. In §2, we associate to a dual pair $G \times H \longrightarrow \mathcal{E}$ as above, and some additional data, a similitude dual pair $\tilde{G} \times \tilde{H}$. After introducing the associated similitude version of theta correspondence in §3 and demonstrating some simple properties of this similitude theta correspondence in §4, we show in §5 that the Howe duality theorem holds for $G \times H$ if and only if the analogous theorem holds for $\tilde{G} \times \tilde{H}$; this is Theorem 5.1 and should be considered the main result of this paper. In §6, we illustrate our theory for a few families of dual pairs in exceptional groups. Just as classical dual pairs in symplectic groups can be associated to a pair of Hermitian and skew-Hermitian spaces (via the tensor product of the two spaces), we highlight three families of dual pairs in exceptional groups which can be obtained from pairs of exceptional algebraic structures. These are a pair of composition algebra and Jordan algebra, a pair of twisted composition algebras or a pair of Jordan pairs. For each of these, we discuss whether a theory of similitude theta correspondence exists and if so, what the relevant similitude groups are. In §7, we discuss how the useful notion of seesaw duality can be extended to the similitude setting, using the families of examples discussed in §6 as illustration. Finally, §8 discusses the similitude theta correspondences in the global setting and §9 collects together some basic results in Clifford theory that are used in the paper.

2. **Similitude Groups**

Let us first introduce the notion and construction of the relevant similitude groups. We will continue to work in the context of the introduction.

2.1. **Initial data.** The initial data needed for the construction of similitude groups is described in the following hypotheses:

(a) the commutative group Z can be embedded into an induced torus:

$$j : Z \hookrightarrow T := \mathrm{Res}_{K/F}\mathbb{G}_m$$

where K is an étale F-algebra of finite rank. Here, and elsewhere, Res denotes the standard Weil restriction functor.

(b) One has
$$S := T/j(Z) \hookrightarrow \mathrm{Res}_{E/F}(\mathbb{G}_m),$$
for some E/F.

We shall fix these data in what follows.

2.2. **Examples.** Let us give some examples:

(1) if $Z = \prod_{i=1}^r \mu_{n_i}$, one takes embeddings $\mu_{n_i} \hookrightarrow \mathbb{G}_m$, so that one has
$$1 \longrightarrow Z \longrightarrow T = \prod_{i=1}^r \mathbb{G}_m \longrightarrow T = \prod_{i=1}^r \mathbb{G}_m \longrightarrow 1$$
where the map $T \to T$ is $z \mapsto z^{n_i}$ on the i-th coordinate.

(2) if
$$Z = \mathrm{Res}^1_{K/F}(\mathbb{G}_m) := \mathrm{Ker}(N_{K/F} : \mathrm{Res}_{K/F}(\mathbb{G}_m) \to \mathbb{G}_m),$$
one takes $T = \mathrm{Res}_{K/F}\mathbb{G}_m$ and one has
$$1 \longrightarrow Z \longrightarrow T \xrightarrow{N_{K/F}} \mathbb{G}_m \longrightarrow 1$$

(3) if
$$Z = \mathrm{Res}^1_{K/F}(\mu_n) := \mathrm{Ker}(N_{K/F} : \mathrm{Res}_{K/F}(\mu_n) \to \mathbb{G}_m),$$
one takes $T = \mathrm{Res}_{K/F}\mathbb{G}_m$ and one has
$$1 \longrightarrow Z \longrightarrow T \xrightarrow{N_{K/F}\times[n]} \mathbb{G}_m \times \mathrm{Res}_{K/F}(\mathbb{G}_m).$$
Note that in this last example, the sequence above is not exact on the right, as the image of the last arrow is a codimension 1 torus. Consider however the special case when
$$|n - [K : F]| = 1.$$
In this case, it turns out that the composite
$$T/Z \xrightarrow{N_{K/F}\times[n]} \mathbb{G}_m \times \mathrm{Res}_{K/F}(\mathbb{G}_m) \xrightarrow{(t,x)\mapsto tx^{-1}} \mathrm{Res}_{K/F}(\mathbb{G}_m) = T$$
is an isomorphism of algebraic tori. Indeed, if $x \in \mathrm{Res}_{K/F}(\mathbb{G}_m)$ lies in the kernel of the above composite map, so that
$$N_{K/F}(x) = x^n,$$
then on taking norms on both sides, we conclude that
$$N_{K/F}(x)^{[K:F]} = N_{K/F}(x)^n,$$
and hence $x^n = N_{K/F}(x) = 1$, i.e. $x \in \mathrm{Res}^1_{K/F}(\mu_n)$. In the examples we shall consider later, the rather peculiar condition $|n - [K : F]| = 1$ will turn out to be satisfied.

2.3. **Similitude groups.** Now we make the following definition:

DEFINITION 2.1. *The similitude group $\tilde{G}$ associated to G and the data in (a) and (b) above is:*

$$\tilde{G} := (G \times T)/Z^{\nabla}.$$

The associated similitude homomorphism is the map

$$\mathrm{sim}_G : \tilde{G} \twoheadrightarrow T/j(Z) \hookrightarrow \mathrm{Res}_{E/F}\mathbb{G}_m.$$

given by the second projection and (b).

Then observe that one has:

$$1 \longrightarrow G \longrightarrow \tilde{G} \xrightarrow{\mathrm{sim}_G} \mathrm{Res}_{E/F}\mathbb{G}_m$$

and

$$1 \longrightarrow T \longrightarrow \tilde{G} \longrightarrow G/Z \longrightarrow 1$$

Likewise, we have the similitude group and similitude character

$$\mathrm{sim}_H : \tilde{H} := (H \times T)/Z^{\nabla} \longrightarrow \mathrm{Res}_{E/F}(\mathbb{G}_m)$$

associated to H and the data in (a) and (b), as well as analogs of the two exact sequences above.

2.4. **Surjectivity of similitude factor.** Recalling that $S = T/j(Z)$, we have a commutative diagram of short exact sequences of algebraic groups:

$$\begin{array}{ccccccccc} 1 & \longrightarrow & Z & \xrightarrow{j} & T & \longrightarrow & S & \longrightarrow & 1 \\ & & \downarrow & & \downarrow & & \| & & \\ 1 & \longrightarrow & G & \longrightarrow & \tilde{G} & \xrightarrow{\mathrm{sim}_G} & S & \longrightarrow & 1. \end{array}$$

On taking F-points, we obtain the following commutative diagram with exact rows:

$$\begin{array}{ccccc} T(F) & \longrightarrow & S(F) & \xrightarrow{\alpha} & H^1(F,Z) \\ \downarrow & & \| & & \downarrow{\scriptstyle \beta} \\ \tilde{G}(F) & \xrightarrow{\mathrm{sim}_G} & S(F) & \longrightarrow & H^1(F,G) \end{array}$$

From this, we see that the similitude map $\mathrm{sim}_G : \tilde{G}(F) \longrightarrow S(F)$ is surjective if and only if the map $S(F) \longrightarrow H^1(F,G)$ is 0. Since the latter map factors as:

$$S(F) \xrightarrow{\alpha} H^1(F,Z) \xrightarrow{\beta} H^1(F,G),$$

we obtain:

PROPOSITION 2.2. *The map $\mathrm{sim}_G : \tilde{G}(F) \longrightarrow S(F)$ is surjective if one of the following conditions holds:*

- *$\alpha : S(F) \longrightarrow H^1(F,Z)$ is 0;*
- *$\beta : H^1(F,Z) \longrightarrow H^1(F,G)$ is 0.*

Observe that the first condition in the proposition depends only on the initial data (a) and (b) in §2.1, whereas the second condition depends only on the pair $Z \subset G$.

2.5. **The group $\tilde{J}^{\mathrm{sim}}$.** Going back to dual pairs, let us set

$$\tilde{J}^{\mathrm{sim}} = (\tilde{G} \times \tilde{H})^{\mathrm{sim}} = \{(g,h) \in \tilde{G} \times \tilde{H} : \mathrm{sim}_G(g) \cdot \mathrm{sim}_H(h) = 1\}.$$

Note that one has exact sequences:

$$1 \longrightarrow G(F) \longrightarrow \tilde{J}^{\mathrm{sim}}(F) \longrightarrow \tilde{H}(F)$$

and

$$1 \longrightarrow H(F) \longrightarrow \tilde{J}^{\mathrm{sim}}(F) \longrightarrow \tilde{G}(F)$$

One denotes the image of the last arrow in each sequence above by $\tilde{H}(F)^+$ and $\tilde{G}(F)^+$ respectively. Then one has the following containments with finite index:

$$T(F) \cdot G(F) \subset \tilde{G}(F)^+ \quad \text{and} \quad T(F) \cdot H(F) \subset \tilde{H}(F)^+.$$

Observe moreover that

$$\tilde{G}(F)^+ = \tilde{G}(F) \quad \text{if and only if} \quad \mathrm{sim}_G(\tilde{G}(F)) \subseteq \mathrm{sim}_H(\tilde{H}(F))$$

and

$$\tilde{H}(F)^+ = \tilde{H}(F) \quad \text{if and only if} \quad \mathrm{sim}_H(\tilde{H}(F)) \subseteq \mathrm{sim}_G(\tilde{G}(F)).$$

In particular, $\tilde{G}(F)^+ = \tilde{G}(F)$ if $\mathrm{sim}_H : \tilde{H}(F) \longrightarrow S(F)$ is surjective.

Definition 2.3. *We shall call the pair of groups $(\tilde{G}(F)^+, \tilde{H}(F)^+)$ constructed above a similitude dual pair.*

3. **Similitude Theta Correspondence**

We now consider the theory of theta correspondence. Suppose that Ω is a minimal representation of $\mathcal{E}(F)$ [GS]. If $\pi \in \mathrm{Irr}(G(F))$, then the big theta lift of π to $H(F)$ is by definition

$$\Theta(\pi) = (\Omega \otimes \pi^\vee)_{G(F)},$$

i.e. the largest quotient of $\Omega \otimes \pi^\vee$ on which $G(F)$ acts trivially (here $\pi^\vee$ denotes the contragredient of π). This is a smooth representation of $H(F)$. As is customary, we let $\theta(\pi)$ denote the maximal semisimple quotient of $\Theta(\pi)$. Likewise, one has a smooth $G(F)$-representation $\Theta(\sigma)$ (and $\theta(\sigma)$) for any $\sigma \in \mathrm{Irr}(H(F))$.

Definition 3.1. *We say that the dual pair (G,H) satisfies the Howe duality property, or the Howe duality theorem holds for (G,H), if $\Theta(\pi)$ is of finite length with a unique irreducible quotient (if nonzero) for any $\pi \in \mathrm{Irr}(G(F))$ and likewise for $\Theta(\sigma)$ for any $\sigma \in \mathrm{Irr}(H(F))$.*

We would now like to extend the theta correspondence for $(G(F), H(F))$ to the setting of the similitude dual pair $(\tilde{G}(F)^+, \tilde{H}(F)^+)$. For this, we observe that

$$T^\nabla = \{(t, t^{-1}) : t \in T\} \subset \tilde{J}^{\mathrm{sim}}$$

is a central subgroup. Setting

$$J^{\mathrm{sim}} = \tilde{J}^{\mathrm{sim}}/T^\nabla = \left((\tilde{G} \times \tilde{H})^{\mathrm{sim}}\right)/T^\nabla,$$

one sees that the natural inclusion gives an isomorphism

$$(G \times H)/Z^\nabla \simeq J^{\mathrm{sim}} = \left((\tilde{G} \times \tilde{H})^{\mathrm{sim}}\right)/T^\nabla.$$

In particular, one has a natural homomorphism

$$\iota : \tilde{J}^{\mathrm{sim}} \twoheadrightarrow J^{\mathrm{sim}} \hookrightarrow \mathcal{E}.$$

On taking F-points and noting that T is an induced torus, so that $H^1(F, T)$ is trivial, we see that

$$((G \times H)/Z^\nabla)(F) = J^{\mathrm{sim}}(F) = (\tilde{G}(F) \times \tilde{H}(F))^{\mathrm{sim}}/T^\nabla(F),$$

so that one has

$$\iota : \tilde{J}^{\mathrm{sim}}(F) \twoheadrightarrow J^{\mathrm{sim}}(F) \hookrightarrow \mathcal{E}(F).$$

In particular, any representation of $\mathcal{E}(F)$ can be pulled back via ι to

$$\tilde{J}^{\mathrm{sim}}(F) = (\tilde{G}(F) \times \tilde{H}(F))^{\mathrm{sim}}.$$

Now one has the following short exact sequences:

$$1 \longrightarrow G(F) \longrightarrow \tilde{J}^{\mathrm{sim}}(F) \longrightarrow \tilde{H}(F)^+ \longrightarrow 1$$

and

$$1 \longrightarrow H(F) \longrightarrow \tilde{J}^{\mathrm{sim}}(F) \longrightarrow \tilde{G}(F)^+ \longrightarrow 1.$$

Given an irreducible representation $\tilde{\pi}$ of $\tilde{G}(F)^+$, we may regard $\tilde{\pi}^\vee$ as a representation of $\tilde{J}^{\mathrm{sim}}(F)$ via the natural surjection $\tilde{J}^{\mathrm{sim}}(F) \to \tilde{G}(F)^+$ given in the second short exact sequence above. Noting that $G(F)$ is a normal subgroup of $\tilde{J}^{\mathrm{sim}}(F)$ by the first short exact sequence above, we set

$$\Theta(\tilde{\pi}) := (\Omega \otimes \tilde{\pi}^\vee)_{G(F)},$$

so that $\Theta(\tilde{\pi})$ is a smooth representation of $\tilde{H}(F)^+$. Likewise for $\tilde{\sigma} \in \mathrm{Irr}(\tilde{H}(F)^+)$, one has

$$\Theta(\tilde{\sigma}) = (\Omega \otimes \tilde{\sigma}^\vee)_{H(F)}$$

which is a smooth representation of $\tilde{G}(F)^+$.

One can rephrase the above definitions slightly by introducing the similitude minimal representation. Set

$$\tilde{\Omega} = \mathrm{ind}_{\tilde{J}^{\mathrm{sim}}(F)}^{\tilde{J}(F)^+} \Omega$$

where

$$\tilde{J} = \tilde{G} \times \tilde{H}$$

and

$$\tilde{J}(F)^+ = \tilde{G}(F)^+ \times \tilde{H}(F)^+.$$

Then $\tilde{\Omega}$ is a representation of the similitude dual pair $\tilde{G}(F)^+ \times \tilde{H}(F)^+$ and we can define $\Theta(\tilde{\pi})$ and $\Theta(\tilde{\sigma})$ in the usual way. We leave it to the reader to verify that the two definitions are equivalent.

As in the "isometry" case, we can define the notion of the Howe duality property holding for $(\tilde{G}(F)^+, \tilde{H}(F)^+)$:

DEFINITION 3.2. *We say that the similitude dual pair $(\tilde{G}(F)^+, \tilde{H}(F)^+)$ satisfies the Howe duality property if $\Theta(\tilde{\pi})$ has finite length and unique irreducible quotient (if nonzero) for any $\tilde{\pi} \in \mathrm{Irr}(\tilde{G}(F)^+)$, and likewise for $\Theta(\tilde{\sigma})$ with $\tilde{\sigma} \in \mathrm{Irr}(\tilde{H}(F)^+)$.*

4. **Central Characters**

Let us record some simple properties of the similitude theta correspondence.

LEMMA 4.1 (Central characters). *Suppose that $\pi \in \mathrm{Irr}(\tilde{G}(F)^+)$ has $T(F)$-central character χ. Then the smooth $\tilde{H}(F)^+$-module $\Theta(\tilde{\pi})$ has $T(F)$-central character χ.*

PROOF. This is because $T^{\nabla}(F) \subset \tilde{J}^{\mathrm{sim}}(F)$ acts trivially on Ω and so $T(F) \subset \tilde{H}(F)^+$ acts on

$$\Theta(\tilde{\pi}) = (\Omega \otimes \tilde{\pi}^{\vee})_{G(F)}$$

in the same way as $T(F) \subset \tilde{G}(F)^+$ acts on $\tilde{\pi}$. ∎

One can also decompose the $\tilde{J}(F)^+$-module $\tilde{\Omega}$ according to characters of the central subgroup $T(F) \times T(F)/T^{\nabla}(F)$. Each character of $T(F) \times T(F)/T^{\nabla}(F)$ is of the form $\chi \otimes \chi$, where χ is a character of $T(F)$. We can consider the χ-isotypic quotient $\tilde{\Omega}_{T,\chi}$ of $\tilde{\Omega}$. which can be described as follows.

One has an intermediate group

$$\tilde{J}^{\mathrm{sim}}(F) \subset \tilde{J}^{\mathrm{sim}}(F) \cdot (T(F) \times T(F)) \subset \tilde{J}(F)^+.$$

We may extend the $\tilde{J}^{\mathrm{sim}}(F)$-module Ω to the intermediate group $\tilde{J}^{\mathrm{sim}}(F) \cdot (T(F) \times T(F))$ by letting $T(F) \times T(F)$ acts by $\chi \otimes \chi$. This extension is well-defined because $\chi \otimes \chi$ is trivial on the intersection

$$\tilde{J}^{\mathrm{sim}}(F) \cap (T(F) \times T(F)) = T^{\nabla}(F).$$

We denote this extended representation by Ω_{χ}. Then one has

$$\tilde{\Omega}_{T,\chi} \simeq \mathrm{ind}_{\tilde{J}^{\mathrm{sim}}(F) \cdot (T(F) \times T(F))}^{\tilde{J}(F)^+} \Omega_{\chi}.$$

It will sometimes be convenient to restrict to a fixed $T(F)$-central character χ, in which case one will be working with $\tilde{\Omega}_{T,\chi}$.

5. The Howe Duality Property

In this section, we shall show:

THEOREM 5.1. *The Howe duality property holds for the dual pair $(G(F), H(F))$ if and only if the Howe duality property holds for the similitude dual pair $(\tilde{G}(F)^+, \tilde{H}(F)^+)$.*

5.1. **Some lemmas.** We shall show this in a series of lemmas, beginning with the following observation:

LEMMA 5.2. *Let V be a not-necessarily-smooth representation of $\tilde{G}(F)^+$ on which the central subgroup $T(F)$ acts by a character χ. Then:*

(i) A vector $v \in V$ is smooth with respect to $\tilde{G}(F)^+$ if and only if it is smooth with respect to $G(F)$.

(ii) If V^∞ denotes the subspace of smooth vectors of V (with respect to $\tilde{G}(F)^+$ or $G(F)$), then V^∞ has finite length as a $\tilde{G}(F)^+$-module if and only if it has finite length as a $G(F)$-module.

(iii) If V^∞ is an irreducible smooth $\tilde{G}(F)^+$-module, then V^∞ is semisimple as a $G(F)$-module. Indeed,

$$V^\infty|_{G(F)} \simeq m \cdot \bigoplus_{i=1}^{k} V_i$$

where the V_i's are irreducible smooth $G(F)$-modules which are pairwise inequivalent. Moreover, $\tilde{G}(F)^+$ permutes the isomorphism classes of the V_i's transitively.

(iv) Suppose that $V = V^\infty$ is of finite length (as $\tilde{G}(F)^+$-module or $G(F)$-module). Let $co\check{s}oc(V)$ be the cosocle (or maximal semisimple quotient) of V as a $\tilde{G}(F)^+$-module and likewise let $cosoc(V)$ be the cosocle of V as a $G(F)$-module. Then the natural map

$$cosoc(V) \longrightarrow co\check{s}oc(V)$$

is an isomorphism of $G(F)$-modules.

PROOF. All these follow readily from the fact that $T(F) \cdot G(F)$ is an open subgroup of finite index in $\tilde{G}(F)^+$ and the Clifford theory recounted in Section 9 below. More precisely,

- (i) follows from the fact that an open compact subgroup of $G(F) \cdot T(F)$ is an open compact subgroup of $\tilde{G}(F)^+$;
- (ii) follows from Proposition 9.1(1);

- (iii) follows from Proposition 9.1(2) and Proposition 9.4;
- (iv) follows from Proposition 9.1(3).

□

Next we have:

LEMMA 5.3. *Let $\tilde{\pi} \in \mathrm{Irr}(\tilde{G}(F)^+)$ and suppose (as in Lemma 5.2(iii)) that*

$$\tilde{\pi}|_{G(F)} \simeq m \cdot \bigoplus_{i=1}^{k} \pi_i$$

for some $\pi_i \in \mathrm{Irr}(G(F))$. Then we have:

$$\Theta(\tilde{\pi})|_{H(F)} = m \cdot \bigoplus_i \Theta(\pi_i). \tag{5.1}$$

In particular, $\Theta(\tilde{\pi})$ is nonzero if and only if $\Theta(\pi_i) \neq 0$ for some (equivalently for all) i.

PROOF. We compute:

$$\begin{aligned}
\Theta(\tilde{\pi})|_{H(F)} &= (\Omega \otimes \tilde{\pi}^\vee)_{G(F)} \quad \text{(by definition)} \\
&= \left(\Omega \otimes (m \cdot \bigoplus_i \pi_i^\vee)\right)_{G(F)} \\
&= m \cdot \bigoplus_i (\Omega \otimes \pi_i^\vee)_{G(F)} \\
&= m \cdot \bigoplus_i \Theta(\pi_i).
\end{aligned}$$

Here, we have used Lemma 5.2(i) which ensures that the contragredient of $\tilde{\pi}$ as a representation of $\tilde{G}(F)$ is the same as its contragredient as a representation of $G(F)$, so that

$$\tilde{\pi}^\vee|_{G(F)} \simeq m \cdot \bigoplus_i \pi_i^\vee.$$

This completes the proof of the lemma.

□

By Lemma 5.3 and Lemma 5.2, we deduce:

COROLLARY 5.4.

$\Theta(\tilde{\pi})$ has finite length as an $\tilde{H}(F)^+$-module

if and only if

$\Theta(\pi_i)$ has finite length as an $H(F)$-module for all i.

Assuming this finiteness condition holds, one has:

$$\Theta(\tilde{\pi}) = m \cdot \bigoplus_i \Theta(\pi_i)$$

and

$$\theta(\tilde{\pi}) = m \cdot \bigoplus_{i \in I} \theta(\pi_i) \tag{5.2}$$

as $H(F)$-modules.

5.2. **Proof of Theorem 5.1.** We can now prove Theorem 5.1. Suppose first that the Howe duality property holds for the pair (G, H). By symmetry, for any $\tilde{\pi} \in \mathrm{Irr}(\tilde{G}(F)^+)$, we need to show that if $\Theta(\tilde{\pi})$ is nonzero, then it has finite length and $\theta(\tilde{\pi})$ is irreducible.

Suppose that

$$\tilde{\pi}|_{G(F)} \simeq m \cdot \bigoplus_{i \in I} \pi_i$$

for $\pi_i \in \mathrm{Irr}(G(F))$. Then by Corollary 5.4,

$$\Theta(\tilde{\pi})|_{H(F)} = m \cdot \bigoplus_i \Theta(\pi_i).$$

By hypothesis, $\Theta(\pi_i)$ has finite length for each i, and hence so does $\Theta(\tilde{\pi})$ as an $\tilde{H}(F)$-module by Corollary 5.4. Moreover, by Lemma 5.3, $\Theta(\pi_i)$ is nonzero for each i and $\sigma_i := \theta(\pi_i)$ is irreducible by hypothesis.

Let $\tilde{\sigma} \subset \theta(\tilde{\pi})$ be an irreducible summand. Since (by (5.2))

$$\theta(\tilde{\pi})|_{H(F)} = m \cdot \bigoplus_{i \in I} \theta(\pi_i) = m \cdot \bigoplus_{i \in I} \sigma_i,$$

we see that

$$\tilde{\sigma}|_{H(F)} \simeq n \cdot \bigoplus_i \sigma_i \quad \text{for some } 0 < n \leq m.$$

If $m = 1$, then $\theta(\tilde{\pi}) = \tilde{\sigma}$ and we would have been done already. For general m, we argue as follows. Switching the roles of G and H in the above argument, it follows by Corollary 5.4 that

$$\theta(\tilde{\sigma})|_{G(F)} = n \cdot \bigoplus_i \theta(\sigma_i).$$

By hypothesis, each $\theta(\sigma_i)$ is irreducible and hence $\theta(\sigma_i) = \pi_i$. But since $\tilde{\pi} \subset \theta(\tilde{\sigma})$, we deduce that $m \leq n$. Hence, we must have $m = n$, so that $\theta(\tilde{\pi}) = \tilde{\sigma}$ is irreducible.

Conversely, suppose now the that Howe duality property holds for the similitude pair $(\tilde{G}(F)^+, \tilde{H}(F)^+)$. By symmetry, take any $\pi \in \mathrm{Irr}(G(F))$ and choose $\tilde{\pi} \in \mathrm{Irr}(\tilde{G}(F)^+)$ such that $\pi \subset \tilde{\pi}$. Suppose

$$\tilde{\pi}|_{G(F)} \simeq m \bigoplus_{i \in I} \pi_i$$

with $\pi_i \in \mathrm{Irr}(G(F))$ for each i, and $\pi = \pi_{i_0}$ for some $i_0 \in I$.

By Cor. 5.4, we have

$$\Theta(\tilde{\pi})|_{H(F)} = m \cdot \bigoplus_i \Theta(\pi_i).$$

Since we are assuming that $\Theta(\pi) \neq 0$, it follows by Lemma 5.3 that $\Theta(\tilde{\pi})$ is nonzero. By hypothesis and Cor. 5.4, $\Theta(\tilde{\pi})$ has finite length as a $H(F)$-module, and hence so does $\Theta(\pi_i)$ for each i.

Consider $\tilde{\sigma} := \theta(\tilde{\pi})$, which is irreducible by hypothesis. By (5.2), we see that

$$\tilde{\sigma}|_{H(F)} \simeq m \cdot \bigoplus_{i \in I} \theta(\pi_i), \tag{5.3}$$

with each $\theta(\pi_i)$ semisimple of finite length. On writing each $\theta(\pi_i)$ as a sum of irreducible summands, we have:

$$\tilde{\sigma}|_{H(F)} \simeq n \bigoplus_{j \in J} \sigma_j \tag{5.4}$$

with

$$\text{non-isomorphic } \sigma_j \in \mathrm{Irr}(H(F)), \quad |I| \leq |J| \quad \text{and } n \geq m.$$

Then applying (5.2) with the roles of G and H exchanged, one has

$$m \cdot \bigoplus_{i \in I} \pi_i = \tilde{\pi}|_{G(F)} = \theta(\tilde{\sigma})|_{G(F)} = n \cdot \bigoplus_{j \in J} \theta(\sigma_j),$$

with $\theta(\sigma_j) \neq 0$. This implies that

$$m = n, \quad |I| = |J| \quad \text{and } \theta(\sigma_j) = \pi_j,$$

after fixing some bijection of I with J. In particular, going back to (5.3) and (5.4), we deduce that $\theta(\pi_i) = \sigma_i$ is irreducible for each $i \in I$.

This completes the proof of Theorem 5.1.

6. **Examples**

We give some interesting examples of similitude dual pairs and similitude theta correspondences.

6.1. **Classical dual pairs.** We begin by revisiting the case of classical dual pairs.

- (Symplectic-orthogonal) For a quadratic space V and a symplectic vector space W, we have
$$\iota : H \times G = \mathrm{O}(V) \times \mathrm{Sp}(W) \longrightarrow \mathrm{Sp}(V \otimes W).$$
Then
$$\mathrm{Ker}(\iota) = \mu_2^{\nabla}.$$
Hence, we have $Z = \mu_2$ and may take $T = \mathbb{G}_m$, so that
$$\tilde{H} = \mathrm{GO}(V) \quad \text{and} \quad \tilde{G} = \mathrm{GSp}(W)$$
are the usual similitude groups. Then one has
$$\iota : \tilde{J}^{\mathrm{sim}} = (\mathrm{GO}(V) \times \mathrm{GSp}(W))^{\mathrm{sim}} \longrightarrow \mathrm{Sp}(V \otimes W)$$
extending i.

  Recall however that the Weil representation Ω is not a representation of $\mathrm{Sp}(V \otimes W)$ but rather of its metaplectic cover $\mathrm{Mp}(V \otimes W)$. In the classical theta correspondence, one needs to first construct liftings of ι to $\mathrm{Mp}(V \otimes W)$:
$$\tilde{\iota} : \mathrm{O}(V) \times \mathrm{Sp}(W) \longrightarrow \mathrm{Mp}(V \otimes W),$$
before one can restrict the Weil representation to $\mathrm{O}(V) \times \mathrm{Sp}(W)$. Such splittings exist if $\dim V$ is even and have been systematically constructed by Kudla [Ku]. Likewise, to obtain a similitude theta correspondence, we would need to extend $\tilde{\iota}$ to:
$$\tilde{\iota} : (\mathrm{GO}(V) \times \mathrm{GSp}(W))^{\mathrm{sim}} \longrightarrow \mathrm{Mp}(V \otimes W).$$
Such extensions have been constructed by B. Roberts [R]. This accounts for the main complexity in the theory of similitude theta correspondences for symplectic-orthogonal dual pairs.

- (Unitary) If V is a Hermtitian space and W a skew-Hermitian space relative to a quadratic extension E/F, one has
$$\iota : \mathrm{U}(V) \times \mathrm{U}(W) \longrightarrow \mathrm{Sp}(\mathrm{Res}_{E/F}(V \otimes_E W))$$
with
$$\mathrm{Ker}(\iota) = (E^1)^{\nabla}$$
where we have written E^1 for $\mathrm{Res}^1_{E/F}(\mathbb{G}_m)$. In this case, we take $T = \mathrm{Res}_{E/F}\mathbb{G}_m$ to get the usual similitude groups
$$\tilde{G} = \mathrm{GU}(V) \quad \text{and} \quad \tilde{H} = \mathrm{GU}(W).$$
As in the symplectic-orthogonal case, one needs to construct a lifting
$$\tilde{\iota} : \tilde{J}^{\mathrm{sim}} = (\mathrm{GU}(V) \times \mathrm{GU}(W))^{\mathrm{sim}} \longrightarrow \mathrm{Mp}(\mathrm{Res}_{E/F}(V \otimes_E W))$$

before one can consider the similitude theta correspondence. However, the unitary case is somewhat better than the symplectic-orthogonal one.

More precisely, note that

$$\iota : \tilde{J}^{\mathrm{sim}} = (\mathrm{GU}(V) \times \mathrm{GU}(W))^{\mathrm{sim}} \longrightarrow \mathrm{Sp}(V \otimes W)$$

has image contained in $\mathrm{U}(V \otimes_E W)$. However, the metaplectic covering is split over $\mathrm{U}(V \otimes_E W)$! By fixing such a splitting, we thus obtain

$$\tilde{J}^{\mathrm{sim}} \longrightarrow \mathrm{U}(V \otimes_E W) \longrightarrow \mathrm{Mp}(V \otimes_E W).$$

Thus, there is no need to do extra work beyond that needed for splitting the isometry dual pairs.

6.2. **Exceptional dual pairs.** Given the somewhat sporadic nature of the geometry of exceptional groups, it is not surprising that it is harder to formulate a uniform theory of dual pairs in exceptional groups. Nonetheless, we shall attempt to do so for a few families of such dual pairs, by realizing the dual pairs as

$$G \times H = \mathrm{Aut}(A) \times \mathrm{Aut}(B)$$

for two algebraic structures A and B.

6.3. **Composition algebras and cubic norm structures.** We refer the reader to [KMRT, Chap. VIII, §33] for the notion of composition algebras and [KMRT, Chap. 9, §37 and §38] for the notion of cubic norm structures (also known as Freuthendal-Jordan algebras). Let C be a composition algebra over F, so that $\dim C = 1, 2, 4$ or 8. Let J be a nontrivial cubic norm structure over F, so that J has dimension 3, 6, 9, 15 or 27. Then one has an isometry dual pair [MS, Ru]

$$\mathrm{Aut}(C) \times \mathrm{Aut}(J) \hookrightarrow \mathcal{E}$$

where $\mathcal{E}$ is a certain ambient adjoint group. We enumerate the most interesting (split) cases, where C or J have the maximal dimensions.

- For $\dim C = 8$, one has $\mathrm{Aut}(C) = G_2$ and as J varies, one has the dual pairs

  $$G_2 \times \mathrm{Aut}(J) \subset \mathcal{E}$$

  with $\mathrm{Aut}(J)$ and $\mathcal{E}$ given in the following table.

$\dim J$	3	6	9	15	27
$\mathrm{Aut}(J)$	S_3	SO_3	$\mathrm{PGL}_3 \rtimes \mathbb{Z}/2\mathbb{Z}$	PGSp_6	F_4
$\mathcal{E}$	$\mathrm{PGSO}_8 \rtimes S_3$	F_4	$E_6 \rtimes \mathbb{Z}/2\mathbb{Z}$	E_7	E_8

- For $\dim J = 27$, one has $\mathrm{Aut}(J) = F_4$ and as C varies, one has the dual pairs

  $$F_4 \times \mathrm{Aut}(C) \subset \mathcal{E}$$

with $\mathrm{Aut}(C)$ and $\mathcal{E}$ given in the following table.

$\dim C$	2	4	8
$\mathrm{Aut}(C)$	$Z/2\mathbb{Z}$	PGL_2	G_2
$\mathcal{E}$	$E_6 \rtimes \mathbb{Z}/2\mathbb{Z}$	E_7	E_8

Observe that the map from $\mathrm{Aut}(C) \times \mathrm{Aut}(J)$ to $\mathcal{E}$ is injective. Thus, in such cases, we do not have a theory of similitude theta correspondence.

6.4. **Twisted composition algebras.** Let E be an étale cubic F-algebra. Then one has the notion of twisted composition algebras with respect to E/F; the reader can consult [KMRT, Chap. 8, §36] for this. One way such a twisted composition algebra arises is to start with a composition F-algebra C and consider $C^\flat = C \otimes_F E$. Then a construction in [KMRT, §36C, Pg 499] equips $C^\flat$ with the structure of a twisted composition algebra, built out of the composition algebra structure on C. In fact, if $C^\flat$ is any twisted composition algebra, then $\dim_E(C^\flat) = 1$, 2, 4 or 8 [KMRT, Cor. 36.4, Pg 492].

Let $C_1^\flat$ and $C_2^\flat$ be two twisted composition algebras relative to E/F. Then one has a dual pair [GS2]

$$i : \mathrm{Aut}_E(C_1^\flat) \times \mathrm{Aut}_E(C_2^\flat) \longrightarrow \mathcal{E}$$

where $\mathcal{E}$ is some ambient adjoint group. We enumerate the most interesting case with $\dim_E C_1^\flat$ maximal. Then one has $\mathrm{Aut}_E(C_1^\flat) = \mathrm{Spin}_8^E$, a simply-connected quasi-split group of type D_4 determined by E. As $C_2^\flat$ varies (we set $C^\flat = C_2^\flat$ to simplify notation), one obtains the dual pair

$$\mathrm{Spin}_8^E \times \mathrm{Aut}_E(C^\flat) \longrightarrow \mathcal{E}$$

with $\mathrm{Aut}(C^\flat)$ and $\mathcal{E}$ given in the following table (we assume $E = F^3$ so that the groups are split), where Res stands for $\mathrm{Res}_{E/F}$:

$\dim_E C^\flat$	1	2	4	8
$\mathrm{Aut}(C^\flat)$	$\mathrm{Res}(\mu_2)/\mu_2$	$\mathrm{Res}(\mathbb{G}_m)/\mathbb{G}_m \rtimes \mathbb{Z}/2\mathbb{Z}$	$\mathrm{Res}(\mathrm{SL}_2)/\mu_2$	Spin_8^E
$\mathcal{E}$	F_4	$E_6 \rtimes \mathbb{Z}/2\mathbb{Z}$	E_7	E_8

Observe that the group $\mathrm{Aut}_E(C^\flat)$ has center isomorphic to

$$Z = \mathrm{Res}_{E/F}(\mu_2)/\mu_2 \simeq \mathrm{Res}^1_{E/F}(\mu_2)$$

where the last isomorphism is given by

$$x \mapsto N_{E/F}(x)/x =: x^\#.$$

Moreover, the map

$$i : \mathrm{Spin}_8^E \times \mathrm{Aut}(C^\flat) \longrightarrow \mathcal{E}$$

has

$$\mathrm{Ker}(i) = Z^\nabla \simeq \mathrm{Res}^1_{E/F}(\mu_2).$$

Thus, in this case, we have a theory of similitude theta correspondence which we shall now explicate.

We first pick the data (a) and (b) in §2.1 as in Example (3) of §2.2. Namely, we take $T = \mathrm{Res}_{E/F}(\mathbb{G}_m)$ and consider the natural embedding

$$j : \mathrm{Res}^1_{E/F}(\mu_2) \hookrightarrow T = \mathrm{Res}_{E/F}(\mathbb{G}_m).$$

As in §2.2, we then have the embedding

$$T/j(Z) \xrightarrow{N_{E/F}\times[2]} \mathbb{G}_m \times \mathrm{Res}_{E/F}(\mathbb{G}_m)$$

whose cokernel has dimension 1. In this special case, since $3 - 2 = 1$, it turns out that

$$T/j(Z) \simeq \mathrm{Res}_{E/F}(\mathbb{G}_m) = T$$

via the map

$$x \mapsto N_{E/F}(x)/x^2 = x^{\#}/x.$$

Now let us consider the similitude groups

$$\tilde{G} = (\mathrm{Spin}^E_8 \times T)/Z^{\nabla} \xrightarrow{pr_2} T/j(Z) \xrightarrow{x\mapsto x^{\#}/x} T = \mathrm{Res}_{E/F}(\mathbb{G}_m)$$

and

$$\tilde{H} = (\mathrm{Aut}_E(C^\flat) \times T)/Z^{\nabla} \xrightarrow{pr_2} T/j(Z) \xrightarrow{x\mapsto x^{\#}/x} T = \mathrm{Res}_{E/F}(\mathbb{G}_m),$$

Hence, the similitude maps sim_G and sim_H on the group of F-rational points both take value in $T(F) = E^\times$.

We would like to know what the groups $\tilde{G}(F)^+$ and $\tilde{H}(F)^+$ are. If F is nonarchimedean, then $H^1(F, \mathrm{Spin}^E_8) = 0$ (because Spin^E_8 is simply connected semisimple; see [Kn]) and by Proposition 2.2, we see that the map $\mathrm{sim}_G : \tilde{G}(F) \longrightarrow E^\times$ is surjective. Hence $\tilde{H}(F)^+ = \tilde{H}(F)$ when F is nonarchimedean. The same is true for $\tilde{G}(F)^+$ if $\dim_E C^\flat = 8$. We shall now consider the question of whether $\mathrm{sim}_H : \tilde{H}(F) \longrightarrow E^\times$ is surjective when $\dim_E C^\flat = 2$ or 4, ignoring the somewhat degenerate case when $\dim_E C^\flat = 1$. For this, it is convenient to give an alternative description of $\tilde{H}$ for which it is easier to describe $\tilde{H}(F)$.

- When $\dim_E C^\flat = 4$, the natural inclusion

  $$\mathrm{Res}_{E/F}(\mathrm{SL}_2 \times \mathbb{G}_m) \hookrightarrow \mathrm{Res}_{E/F}(\mathrm{GL}_2 \times \mathbb{G}_m)$$

  descends to an isomorphism

  $$\tilde{H} \longrightarrow \mathrm{Res}_{E/F}(\mathrm{GL}_2 \times \mathbb{G}_m)/\iota(\mathrm{Res}(\mathbb{G}_m))$$

  where

  $$\iota(t) = (t, (t^{-1})^{\#}).$$

  Then the group $\tilde{H}(F)$ is given by

  $$\tilde{H}(F) = (\mathrm{GL}_2(E) \times E^\times)/\iota(E^\times)$$

and the similitude character is

$$\mathrm{sim}_H(h,x) = \det(h)\cdot\frac{x^{\#}}{x}.$$

From this, it is clear that sim_H is surjective, so that $\tilde{G}(F)^+ = \tilde{G}(F)$.

- When $\dim_E C^\flat = 2$ and recalling that $T = \mathrm{Res}_{E/F}(\mathbb{G}_m)$, we have an isomorphism:

$$\begin{aligned}\tilde{H}^0 = (T\times T)/(\mathbb{G}_m\times \mathrm{Res}_{E/F}(\mu_2)) \\ \simeq\Big\downarrow{\scriptstyle (t_1,t_2)\mapsto(t_1,t_1^{-1},t_2)} \\ (T\times T\times T)/(\mathbb{G}_m\times T)\end{aligned}$$

where

(i) the embedding

$$\mathbb{G}_m\times \mathrm{Res}_{E/F}(\mu_2)\longrightarrow T\times T$$

in the first line is given by

$$(a,z)\mapsto (az,(z^{-1})^{\#}),$$

(ii) the embedding

$$\mathbb{G}_m\times T\longrightarrow T\times T\times T$$

in the second line is given by

$$(a,t)\mapsto (at,a^{-1}t,(t^{-1})^{\#}).$$

With this alternative description of $\tilde{H}^0$, all tori involved are induced tori, so that

$$\tilde{H}^0(F)\simeq (E^\times\times E^\times\times E^\times)/(F^\times\times E^\times)$$

where $F^\times\times E^\times$ is embedded into $(E^\times)^3$ as in (ii) above. In this incarnation, the similitude character is given by

$$\mathrm{sim}_H(x,y,z) = x\cdot y\cdot\frac{z^{\#}}{z}\in E^\times.$$

In particular, sim_H is surjective onto $E^\times$, so that $\tilde{G}(F)^+ = \tilde{G}(F)$ in this case as well.

In particular, let us consider the case where the central character is trivial. Then we obtain for example the similitude dual pairs of adjoint type:

$$\mathrm{PGSO}_8^E(F)\times\begin{cases}\mathrm{PGSO}_8^E(F)\text{ in }E_8;\\ \mathrm{PGL}_2(E)\text{ in }E_7;\\ (E^\times/F^\times)\rtimes\mathbb{Z}/2\mathbb{Z}\text{ in }E_6\rtimes\mathbb{Z}/2\mathbb{Z}.\end{cases}$$

6.5. **Jordan pairs.** We refer the reader to [L, Introduction and Chap. 1] for the notion of Jordan pairs. Since this notion is perhaps less familiar to the reader than the notion of Jordan algebras, let us give some motivation and a brief introduction.

A Freuthendal-Jordan algebra or a cubic norm structure J comes equipped with a norm form, which is a cubic form $N_J : J \longrightarrow F$. The similitude group of this cubic form

$$\mathrm{sim}(J, N_J) = \{(g, t) \in \mathrm{GL}(J) \times \mathbb{G}_m : N_J \circ g = t \cdot N_J\}$$

is called the structure group of J, and we will call the isometry group $\mathrm{iso}(J, N_J)$ of N_J the reduced or special structure group (this consists of those pairs (g, t) with $t = 1$). If J is the 27-dimensional Jordan algebra, for example, $\mathrm{sim}(J, N_J)$ is the group GE_6 and $\mathrm{iso}(J, N_J)$ is the simply-connected E_6.

Now the group $\mathrm{sim}(J, N_J)$ acts irreducibly on J and its linear dual J^*, but these two representations are not isomorphic (as their central characters are different) and there is no reason to favour one of these representation over the other (a more familiar example is: a group isomorphic to $\mathrm{GL}(V)$ has two standard representations). Indeed, the trace bilinear form on J allows us to identify J with J^*, and this defines an outer automorphism of $\mathrm{sim}(J, N_J)$ which is the inverse map on the center of $\mathrm{sim}(J, N_J)$ and which interchanges the two representations. In addition, in the context of E_6, when one considers a quasi-split E_6 associated to a quadratic field extension K/F, the two 27-dimensional representations are fused together to give a single rational representation over F. Hence, such a quasi-split E_6 cannot be realized as the isometry group of a cubic form over F, unlike the split form.

The theory of Jordan pairs, introduced by Loos [L], treats both these representations J and J^* on equal footing and realizes $\mathrm{sim}(J, N_J)$ as the automorphism group of an algebraic structure on the pair $\{J, J^*\}$. More formally, a Jordan pair over F consists of the data:

- a pair (J^+, J^-) of F-vector spaces;
- a pair of quadratic maps defined over F:

$$Q^+ : J^+ \longrightarrow \mathrm{Hom}_F(J^-, J^+) \quad \text{and} \quad Q^- : J^- \longrightarrow \mathrm{Hom}_F(J^+, J^-),$$

satisfying the following axioms [L, Pg. 1, Def. 1.2] for $\epsilon = \pm$ and any F-algebra K:

(JP1)

$$\{x, y, Q^\epsilon(x)(z)\}^\epsilon = Q^\epsilon(x)\left(\{y, x, z\}^{-\epsilon}\right) \text{ for any } x \in J^\epsilon(K) \text{ and } y, z \in J^{-\epsilon}(K);$$

(JP2)

$$\{Q^\epsilon(x)(y), y, z\}^\epsilon = \{x, Q^{-\epsilon}(y)(x), z\}^\epsilon \text{ for any } x, z \in J^\epsilon(K) \text{ and } y \in J^{-\epsilon}(K);$$

(JP3)

$$Q^\epsilon(Q^\epsilon(x)(y)) = Q^\epsilon(x) \circ Q^{-\epsilon}(y) \circ Q^\epsilon(x) \text{ for any } x \in J^\epsilon(K) \text{ and } y \in J^{-\epsilon}(K),$$

where we have set

$$\{x, y, z\}^\epsilon = Q^\epsilon(x+z)(y) - Q^\epsilon(x)(y) - Q^\epsilon(z)(y) \in J^\epsilon$$

for the linearization of the map $(x, y) \mapsto Q^\epsilon(x)(y)$. These axioms may look a bit unwieldy for the uninitiated (including ourselves), but we will not seriously make use of them in this paper.

A homomorphism from one Jordan pair (J^+, J^-) to another (V^+, V^-) is a pair of linear maps

$$\phi^\epsilon : J^\epsilon \longrightarrow V^\epsilon \quad (\text{with } \epsilon = \pm)$$

such that

$$\phi^\epsilon(Q^\epsilon_J(x)(y)) = Q^\epsilon_V(\phi^\epsilon(x))(\phi^{-\epsilon}(y)) \quad \text{for } x \in J^\epsilon \text{ and } y \in J^{-\epsilon}.$$

Hence, one has a notion of the automorphism group of a Jordan pair (J^+, J^-), which is a subgroup of $\mathrm{GL}(J^+) \times \mathrm{GL}(J^-)$. Via the projection onto each of the factors, $\mathrm{Aut}(J^+, J^-)$ has two natural representations.

6.6. **Examples.** We give two pertinent examples here:

- For a vector space V, set
$$(V^+, V^-) = (V, V^*),$$
and define:
$$Q^+(v)(v^*) = \langle v, v^* \rangle \cdot v, \qquad Q^-(v^*)(v) = \langle v^*, v \rangle \cdot v^*.$$
This defines a Jordan pair whose automorphism group is the subgroup
$$\mathrm{GL}(V) \hookrightarrow \mathrm{GL}(V^+) \times \mathrm{GL}(V^-).$$
Thus, this gives a description of the general linear group without favouring one of its two standard representations.

- For a cubic norm structure J, the pair
$$(J^+, J^-) = (J, J^*)$$
inherits the structure of a Jordan pair from its Jordan algebra structure and the automorphism group of (J^+, J^-) is precisely the structure group of J. More precisely, recall that in addition to the cubic norm form N_J and an identity element 1_J, a cubic norm structure J comes equipped with
  - a nondegenerate symmetric bilinear trace form $T : J \times J \to F$;
  - a quadratic map $x \mapsto x^\#$ from J to itself, with linearization
$$x \times y = (x+y)^\# - x^\# - y^\#.$$

Given these, one sets

$$U_x(y) = T(x,y)x - x^{\#} \times y \quad \text{for } x, y \in J$$

and observes that U is quadratic in x and linear in y. The reader familiar with the notion of quadratic Jordan algebras will recognize that this is the U-operator in that theory. One then has a Jordan pair defined by setting:

$$(J^+, J^-) = (J, J) \quad \text{and} \quad (Q^+, Q^-) = (U, U).$$

Since T gives an identification of J with J^*, we may also describe this Jordan pair as (J, J^*).

6.7. **Dual pairs.** After this brief sidetrack, we can now introduce a family of dual pairs in exceptional group of the form [MS, Ru]

$$i : \mathrm{SL}_3 \times \mathrm{iso}(J, N) \longrightarrow \mathcal{E}$$

where J is a Freudenthal Jordan algebra. For split groups, this dual pair is obtained by removing from the extended Dynkin diagram of $\mathcal{E}$ (of type F_4 or E_n) the simple vertex joined to the unique vertex attached to the extra vertex. One sees that the extended Dynkin diagram breaks into two pieces, with one of them of type A_2.

By the notion of Jordan pairs introduced above, we recognize that this dual pair is of the form

$$\mathrm{Aut}(V^+, V^-)^{der} \times \mathrm{Aut}(J^+, J^-)^{der} = \mathrm{SL}(V) \times \mathrm{iso}(J, N_J),$$

where $\dim V = 3$ and the superscript *der* signifies the derived group.

The following summarizes the algebras and groups which occur, where $J(C)$ the space of 3 by 3 hermitian symmetric matrices with coefficients in a composition algebra C (F, quadratic K, quaternion B, or octonion $\mathbb{O}$).

$\mathcal{E}$	F_4	$E_6 \rtimes \mathrm{Gal}(K/F)$	E_7	E_8
C	F	K	B	$\mathbb{O}$
$\dim J(C)$	6	9	15	27
$\mathrm{iso}(J, \det)$	$\mathrm{SL}_3(F)$	$\mathrm{SL}_3(K)/\mathrm{Res}^1_{K/F}(\mu_3) \rtimes \mathrm{Gal}(K/F)$	$\mathrm{SL}_3(B)/\mu_2$	E_6^{sc}

Observe that the centers of $\mathrm{SL}(V)$ and $\mathrm{iso}(J, \det)$ are isomorphic to μ_3 in all cases and

$$\mathrm{Ker}(i) = \mu_3^{\nabla}.$$

Hence, we take $T = \mathbb{G}_m$, so that

$$\tilde{J}^{\mathrm{sim}} = (\mathrm{GL}(V) \times \mathrm{sim}(J, N_J))^{\mathrm{sim}}.$$

PROPOSITION 6.1. *If $J = J(C)$ is the space of 3 by 3 hermitian symmetric matrices with coefficients in a composition algebra C, and $N_J = \det$, then the similitude character* $\mathrm{sim} : \mathrm{sim}(J, N_J)(F) \to F^\times$ *is surjective.*

PROOF. Let $t \in F^\times$. Let $g : J \to J$ be the linear transformation such that for any $x \in J$, $y = g(x)$ is obtained from x by rescaling the entries in the following way. The entries in the upper-left 2×2 block are multiplied by t, the remaining diagonal entry is divided by t and the other entries are left unchanged. Then $\det(y) = t \det(x)$. □

Thus in this case $\tilde{G}(F) = \tilde{G}(F)^+$ and $\tilde{H}(F) = \tilde{H}(F)^+$ and the resulting similitude dual pair is

$$\mathrm{Aut}(V^+, V^-) \times \mathrm{Aut}(J^+, J^-) = \mathrm{GL}(V) \times \mathrm{sim}(J, N_J).$$

Moreover, the group $\mathrm{sim}(J, N_J)(F)$ is given as follows:

$$\mathrm{sim}(J, N_J)(F) =$$

$$\begin{cases} \mathrm{GL}_3(F), & \text{if } C = F; \\ (\mathrm{GL}_3(K) \times F^\times)/\{(t, N_{K/F}(t)^{-1}) : t \in K^\times\} \rtimes \mathrm{Gal}(K/F), & \text{if } C = K; \\ (\mathrm{GL}_3(B) \times F^\times)/\{(t, t^{-2}) : t \in F^\times\}, & \text{if } C = B; \\ \mathrm{GE}_6(F), & \text{if } C = \mathbb{O}. \end{cases}$$

6.8. **Twisted Jordan pairs.** It is in fact better to slightly repackage the definition of Jordan pairs introduced above, by setting

$$J^\square = J^+ \times J^- \quad \text{regarded as an } F \times F\text{-module}$$

and

$$Q^\square = Q^+ \times Q^- : J^\square \longrightarrow \mathrm{Hom}_{F \times F}((J^\square)^\sigma, J^\square)$$

where σ is the nontrivial automorphism of the F-algebra $F \times F$ given by switching the two components. The axioms (JP1-3) for a Jordan pair can be accordingly reformulated in terms of $(J^\square, Q^\square)$. A homomorphism $\phi : (J^\square, Q_J^\square) \longrightarrow (V^\square, Q_V^\square)$ is then a $F \times F$-module homomorphism $J^\square \longrightarrow V^\square$ such that

$$\phi(Q_J^\square(x)(y)) = Q_V^\square(\phi(x))(\phi(y)) \quad \text{for } x, y \in J^\square.$$

The advantage of such a repackaging is that it allows one to introduce a twisted version (or F-rational forms) of Jordan pairs, where one replaces $F \times F$ by a separable quadratic field extension K/F.

Moreover, in the definition of an automorphism of $(J^\square, Q^\square)$, we may consider those ϕ's which are $(F \times F, \sigma)$-linear instead of $(F \times F)$-linear. This gives rise to a larger F-automorphism group $\mathrm{Aut}_F(J^\square, Q^\square)$ containing the subgroup $\mathrm{Aut}_{F \times F}(J^\square, Q^\square)$ as a normal subgroup of index 2; these extra F-automorphisms are outer automorphisms of $\mathrm{Aut}_{F \times F}(J^\square, Q^\square)$ and their action on $J^\square$ exchanges the two factors J^+ and J^-.

Now let K be a separable étale F-algebra with nontrivial automorphism $\sigma \in \mathrm{Aut}(K/F)$. We shall define a notion of Jordan pair (J, Q) with respect to K/F, following a paper of de Medts [dM] where it was introduced under the guise of *Hermitian cubic norm structure* [dM, §4]. Such a Jordan pair consists of:

- a K-vector space J;
- a K-quadratic map $Q : J \longrightarrow \mathrm{Hom}_K(J^\sigma, J)$

satisfying the reformulated analog of (JP1-3) (we will not elaborate further here). Let us give two examples:

- Suppose (V, h) is a K-vector space equipped with a Hermitian form $h : V \times V^\sigma \to K$. Then defining Q by
$$Q(v)(w) = h(v, w) \cdot v \quad \text{for } v, w \in V$$
gives a Jordan pair relative to K/F. The automorphism group of (V, Q) is precisely the unitary group $\mathrm{U}(V, h)$.
- In [dM, Thm. 4.6], it was explained how a cubic norm structure J over K and a "σ-linear self adjoint autotopy" of J give rise to a Hermitian cubic norm structure on J, from which one can deduce a Jordan pair (J, Q) over K/F with Q given by the U-operator for the Hermitian cubic norm structure. If J is the exceptional Jordan algebra, then $\mathrm{Aut}_K(J, Q)^{\mathrm{der}}$ is the quasi-split simply connected E_6^K associated to K/F and
$$\mathrm{Aut}_K(J, Q)/\mathrm{Aut}_K(J, Q)^{\mathrm{der}} \simeq \mathrm{Res}^1_{K/F}(\mathbb{G}_m)$$
is the anisotropic 1-dimensional torus associated to K.

Associated to these two examples and as a twisted version of the dual pair $\mathrm{SL}_3 \times \mathrm{iso}(J, N_J)$ introduced in the previous subsection, one has the quasi-split but non-split dual pair
$$\mathrm{SU}(V, h) \times \mathrm{Aut}_K(J, Q)^{\mathrm{der}} \longrightarrow \mathcal{E},$$
where we assume for simplicity that $\mathcal{E}$ is split. The centers of these groups are isomorphic to
$$Z = \mathrm{Res}^1_{K/F}(\mu_3).$$
Following Example (3) in §2, we choose $T = \mathrm{Res}_{K/F}(\mathbb{G}_m)$ and note that there is a short exact sequence
$$1 \longrightarrow Z \longrightarrow T \longrightarrow T \longrightarrow 1$$
defined by the map
$$x \mapsto x^3/N_{K/F}(x) \quad \text{ on } T.$$
The associated similitude dual pair is:
$$\mathrm{GU}(V, h) \times \mathrm{GAut}_K(J, Q)$$

where

$$\mathrm{GAut}_K(V,Q) = (\mathrm{Res}_{K/F}(\mathbb{G}_m) \times \mathrm{Aut}_K(J,Q)^{der})/Z^{\nabla} = (\mathbb{G}_m \times \mathrm{Aut}_K(J,Q))/\mu_2^{\Delta}.$$

We note here that the similitude character on $\mathrm{GU}(V,h)$ is not the usual similitude character $\mathrm{sim} : \mathrm{GU}(V,h) \longrightarrow \mathbb{G}_m$. Rather, by construction, it is the homomorphism

$$\mathrm{GU}(V,h) \longrightarrow \mathrm{Res}_{K/F}(\mathbb{G}_m)$$

given by

$$g \mapsto \det(g)/\mathrm{sim}(g).$$

This is surjective onto $K^\times$, as one can see by restricting it to a maximal torus in a Borel subgroup (or by observing that $\mathrm{SU}(V,h)$ is simply-connected when F is nonarchimedean). Hence $\mathrm{GAut}_K(J,Q)(F)^+ = \mathrm{GAut}_K(J,Q)(F)$. We will leave it to the reader to work out what $\mathrm{GU}(V,h)(F)^+$ is in the various cases.

7. **Seesaw Duality**

In the theory of theta correspondence, seesaw dual pairs and the associated seesaw dualities serve as useful tools. In this section, we examine how this seesaw duality is impacted by the extension to similitude dual pairs. Hence, suppose one has a seesaw diagram of dual pairs in $\mathcal{E}$:

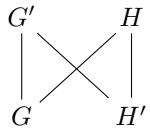

For $\pi \in \mathrm{Irr}(G(F))$ and $\sigma \in \mathrm{Irr}(H'(F))$, the associated seesaw identity reads:

$$\mathrm{Hom}_{H'}(\Theta(\pi),\sigma) \simeq \mathrm{Hom}_{G\times H'}(\Omega, \pi\otimes\sigma) \simeq \mathrm{Hom}_G(\Theta(\sigma),\pi).$$

Now let us make the following hypotheses:

- The pair (G,H) gives rise to a corresponding similitude dual pair $(\tilde{G},\tilde{H})$, as we explained earlier in this paper;
- for the other dual pair (G',H'), $G'\times H'$ maps injectively into $\mathcal{E}$ (so that there is no associated similitude pair).

Observe also that

$$G\times H' \subset \tilde{J}^{\mathrm{sim}} = (\tilde{G}\times\tilde{H})^{\mathrm{sim}}(F).$$

Then we have:

Proposition 7.1. *Assume the above hypotheses. Then for $\tilde{\pi} \in \mathrm{Irr}(\tilde{G}(F))$ and $\sigma \in \mathrm{Irr}(H'(F))$, one has the similitude seesaw identity:*

$$\mathrm{Hom}_G(\Theta(\sigma),\tilde{\pi}) \simeq \mathrm{Hom}_{H'}(\Theta(\tilde{\pi}),\sigma).$$

PROOF. For $\tilde{\pi} \in \mathrm{Irr}(\tilde{G}(F))$ and $\sigma \in \mathrm{Irr}(H'(F))$, we consider

$$\mathrm{Hom}_{G \times H'}(\Omega, \tilde{\pi} \otimes \sigma).$$

On the one hand, this is isomorphic to

$$\mathrm{Hom}_{G \times H'}(\Omega \otimes \sigma^\vee, \tilde{\pi}) = \mathrm{Hom}_G((\Omega \otimes \sigma^\vee)_{H'}, \tilde{\pi}) \simeq \mathrm{Hom}_G(\Theta(\sigma), \tilde{\pi}).$$

On the other hand, by Lemma 5.2(i), we also get

$$\mathrm{Hom}_{G \times H'}(\Omega \otimes \tilde{\pi}^\vee, \sigma) = \mathrm{Hom}_{H'}((\Omega \otimes \tilde{\pi}^\vee)_G, \sigma) = \mathrm{Hom}_{H'}(\Theta(\tilde{\pi}), \sigma).$$

Hence, one deduces that

$$\mathrm{Hom}_G(\Theta(\sigma), \tilde{\pi}) \simeq \mathrm{Hom}_{H'}(\Theta(\tilde{\pi}), \sigma),$$

as desired. □

In other words, there is no significant problem in extending the seesaw identity to the similitude setting, at least under the hypotheses in the proposition.

Let us give some examples of the above situation, using the exceptional dual pairs we discussed above. A first example is the seesaw diagram:

$$\begin{array}{ccc} \mathrm{Aut}(\mathbb{O}) = G_2 & & \mathrm{iso}(J, N) \\ | & \diagdown\diagup & | \\ \mathrm{Aut}(V^\square, Q^\square)^{der} = \mathrm{SL}_3 & & \mathrm{Aut}(J) \end{array}$$

where

- J is a cubic norm structure over F with norm form N;
- V is a 3-dimensional vector space over F, giving rise to a Jordan pair $(V^\square, Q^\square)$;
- $\mathbb{O}$ is the octonion F-algebra constructed as $\mathbb{O} = F^2 \times V^\square$ (as a structurable algebra [dM, §4], a notion we did not introduce).

We have explained that the dual pair $\mathrm{Aut}(J) \times \mathrm{Aut}(\mathbb{O})$ does not have a similitude version, whereas the other pair $\mathrm{SL}(V) \times \mathrm{iso}(J, N)$ does.

As another example, we have:

$$\begin{array}{ccc} \mathrm{Aut}(E \oplus C^\flat) & & \mathrm{Aut}_E(\mathbb{O}^\flat) = \mathrm{Spin}_8^E \\ | & \diagdown\diagup & | \\ \mathrm{Aut}_E(C^\flat) & & \mathrm{Aut}(\mathbb{O}) = G_2 \end{array}$$

where

- $\mathbb{O}$ is the octonion F-algebra giving rise to the twisted octonion algebra $\mathbb{O}^\flat = \mathbb{O} \otimes_F E$ over E/F;

- $C^\flat$ is a twisted composition algebra relative to E/F giving rise to a a cubic norm structure (or Freudenthal-Jordan algebra) $J = E \oplus C^\flat$ via the Springer decomposition [KMRT, §38A, Pg. 522].

As above, the dual pair $\mathrm{Aut}(\mathbb{O}) \times \mathrm{Aut}(J)$ does not have a similitude version whereas the pair $\mathrm{Aut}(\mathbb{O}^\flat) \times \mathrm{Aut}_E(C^\flat)$ does.

Observe that in forming both these seesaw diagrams, the initial data consists of giving two algebraic structures on the bottom row of the diagram, which then induces the algebraic structures in the top row. Moreover, observe that the two seesaw diagrams can be combined into a single one involving 3 dual pairs.

8. **Global Theta Correspondence**

In this section, we consider the global theta correspondence. Hence, let k be a number field with adele ring $\mathbb{A}$. Suppose that we have a dual pair

$$i : G \times H \longrightarrow \mathcal{E}$$

as in the introduction, with $\mathrm{Ker}(i) = Z^\nabla$.

Let Ω be the global minimal representation of $\mathcal{E}$ and suppose one has an automorphic realization

$$\theta : \Omega \longrightarrow \mathcal{A}(\mathcal{E}),$$

where $\mathcal{A}(\mathcal{E})$ denotes the space of smooth (but not necessarily K_∞-finite) automorphic forms (see [W] or [GZ]). For an irreducible cuspidal representation $\pi \subset \mathcal{A}_{cusp}(G)$ of G, one has the usual notion of global theta lifting. More precisely, for $\phi \in \Omega$ and $f \in \pi$, one sets

$$\theta(\phi, f)(h) = \int_{[G]} \theta(\phi)(gh) \cdot \overline{f(g)}\, dg$$

for $h \in H(\mathbb{A})$. Then the global theta lift of π is the $H(\mathbb{A})$-submodule

$$\Theta(\pi) = \langle \theta(\phi, f) : \phi \in \Omega,\ f \in \pi \rangle \subset \mathcal{A}(H).$$

Moreover the map $(\phi, f) \mapsto \theta(\phi, f)$ is a $G(\mathbb{A})$-invariant and $H(\mathbb{A})$-equivariant map

$$\theta : \Omega \otimes \overline{\pi} \longrightarrow \Theta(\pi).$$

Now suppose we have chosen data (a) and (b) as in §2 and hence have the similitude groups $\tilde{G}$ and $\tilde{H}$. On taking points, we have the groups

$$\tilde{G}(k)^+ \subset \tilde{G}(\mathbb{A})^+ = \prod_v \tilde{G}(k_v)^+$$

and likewise for $\tilde{H}(k)^+ \subset \tilde{H}(\mathbb{A})^+$. Moreover, by construction, one has a group homomorphism

$$\iota : \tilde{J}^{\mathrm{sim}} = (\tilde{G} \times \tilde{H})^{\mathrm{sim}} \longrightarrow \mathcal{E}.$$

Let $\tilde{\pi}$ be an irreducible cuspidal representation of $\tilde{G}(\mathbb{A})^+ = \prod_v \tilde{G}(F_v)^+$ with a realization

$$\tilde{\pi} \subset \mathcal{A}_{cusp}(\tilde{G}(k)^+ \backslash \tilde{G}(\mathbb{A})^+).$$

We would like to define its similitude global theta lift to the space $\mathcal{A}(\tilde{H}^+)$ of automorphic forms on $\tilde{H}(\mathbb{A})^+$. For $f \in \tilde{\pi}$, $\phi \in \Omega$ and $y \in \tilde{J}^{\mathrm{sim}}(\mathbb{A})$, we set

$$\theta(\phi, f)(y) = \int_{[G]} \theta(\phi)(g \cdot \iota(y)) \cdot \overline{f(g)}\, dg.$$

Here (and elsewhere), $[G]$ is used to denote the quotient $G(F)\backslash G(\mathbb{A})$. This function of $\tilde{J}^{\mathrm{sim}}(\mathbb{A})$ descends to a function on $\tilde{H}(\mathbb{A})^+$ which is left invariant under $\tilde{H}(k)^+$, thus giving an element of $\mathcal{A}(\tilde{H}^+)$.

A more concrete way of defining the function $\theta(\phi, f)$ as a function on $\tilde{H}(\mathbb{A})^+$ is as follows. Given $h \in \tilde{H}(\mathbb{A})^+$, one can find an element $t(h) \in \tilde{G}(\mathbb{A})^+$ such that

$$\mathrm{sim}_{\tilde{G}}(t(h)) = \mathrm{sim}_{\tilde{H}}(h).$$

Then one has an element

$$(t(h), h) \in \tilde{J}(\mathbb{A})^{\mathrm{sim}} = (\tilde{G} \times \tilde{H})^{\mathrm{sim}}(\mathbb{A}).$$

Then

$$\theta(\phi, f)(h) = \int_{[G]} \theta(\phi)(\iota(gt(h), h)) \cdot \overline{f(g)}\, dg.$$

Since this is merely an explication of the more natural definition of $\theta(\phi, f)$ given initially, the choice of the element $t(h)$ is immaterial.

The span of the functions $\theta(\phi, f)$, as $\phi \in \Omega$ and $f \in \tilde{\pi}$ vary, is the global similitude theta lift $\Theta(\tilde{\pi})$ of $\tilde{\pi}$. We note:

PROPOSITION 8.1. *Let $\tilde{\pi} \subset \mathcal{A}(\tilde{G}^+)$ be an irreducible cuspidal representation of $\tilde{G}(\mathbb{A})^+$. Assume that*

- *$\Theta(\tilde{\pi}) \subset \mathcal{A}_2(\tilde{H}^+)$ is nonzero and contained in the space of square-integrable automorphic forms (with a fixed central character);*
- *the local Howe duality property holds at all places v of k for $G(k_v) \times H(k_v)$ or equivalently $\tilde{G}(k_v)^+ \times \tilde{H}(k_v)^+$;*

Then

$$\Theta(\tilde{\pi}) \simeq \bigotimes_v \theta(\tilde{\pi}_v).$$

In particular, $\Theta(\tilde{\pi})$ is irreducible and one has the compatibility of the local and global similitude theta correspondences.

9. Appendix: Clifford theory for p-adic groups

Let G be a locally compact group and N be a normal open subgroup of G of finite index. Let $A = G/N$, and $m = |A|$. We assume that the topology on N (and hence on G) is defined by a sequence of open compact groups. We assume that G/K is countable for some open compact subgroup K, and hence for all open compact groups of G. This condition assures that Schur's lemma holds for smooth irreducible representations of G and N. The following elementary result is based on [BH, §2.7].

PROPOSITION 9.1. *Let (π, V) be a smooth finite length representation of G. Then*

1. *V is a finite length N-module.*
2. *V is semisimple G-module if and only if it is a semisimple N-module.*
3. *The N-socle of V is equal to the G-socle of V.*

PROOF. (1) We can assume that V is irreducible. Since V is finitely generated over N, it admits an irreducible N-quotient U. Then, by Frobenius reciprocity, V is a submodule of $\mathrm{Ind}_N^G U$. The latter is a semisimple N-module of finite length. Thus V is not only finite length but also a semisimple N-module. This completes (1) and gives one direction of (2). Now assume that V is N-semisimple. Let $W \subset V$ be a G-submodule. Since V is N-semisimple, there exists an N-invariant projection P of V onto W. Then

$$\frac{1}{m} \sum_{g \in G/N} \pi(g) P \pi(g)^{-1}$$

is a G-invariant projection of V onto W. Let $U \subset V$ be the kernel of this projection. Then $V = W \oplus U$ and V is G-semisimple. (3) The G-socle of V is H-semisimple by (2) hence it is contained in the H-socle. On the other hand, the H-socle is G-stable, and G-semisimple by (2). Hence it is contained in the G-socle. ∎

Next we want to describe smooth irreducible representations of G in terms of those of N. Let V be an irreducible representation of G and U an irreducible N-quotient. By Frobenius reciprocity, V is an irreducible submodule of $\mathrm{Ind}_N^G(U)$. Thus we need to analyze the induction from N to G. For every $g \in G$, let U^g be the g-conjugate of (π, U), that is, the representation of N on U where every $n \in N$ acts by $\pi(gng^{-1})$. Let G_U be the stabilizer of U in G, that is, the subgroup of G consisting of all $g \in G$ such that U is isomorphic to U^g, as N-modules.

LEMMA 9.2. *Let V be an irreducible representation of G_U containing U. Then*

$$\mathrm{Ind}_{G_U}^G V$$

is an irreducible representation of G.

PROOF. Observe that the restriction of V to N is a multiple of U. Let $U_1, \ldots, U_l$ be all non-isomorphic G-conjugates of U. We have a decomposition, as an N-module,

$$\mathrm{Ind}_{G_U}^{G} V = \bigoplus_{i=1}^{l} V_i$$

where V_i is a multiple of U_i. Observe that G permutes these summands, and that each V_i is an irreducible G_{U_i}-module. Furthermore, for each i,

$$V_i' = \bigoplus_{j \neq i} V_j$$

is a G_{U_i}-module. Now let W be a G-submodule of $\mathrm{Ind}_{G_U}^{G} V$. Fix an i. It is easy to see that any G_i-submodule of $\mathrm{Ind}_{G_U}^{G} V$, in particular W, either contains V_i or is contained in V_i'. Since W is a G-module, it follows that $W = \mathrm{Ind}_{G_U}^{G} V$ or 0. □

Next we need to understand irreducible representation of G_U containing U. To simplify notation assume that $G = G_U$. Then, for every $g \in G$, there exists $A_g : U \to U$ that intertwines U and U^g. By Schur's lemma A_g is unique up to an element in $\mathbb{C}^\times$. Thus U is naturally a module for a central extension

$$1 \to \mathbb{C}^\times \to \tilde{G} \to G \to 1.$$

This extension splits over N, indeed, we have a canonical choice $A_n = \pi(n)$ for all $n \in N$. After taking the quotient by N we get a central extension

$$1 \to \mathbb{C}^\times \to \tilde{A} \to A \to 1.$$

Next, we have

$$U \otimes \mathrm{Ind}_{\mathbb{C}^\times}^{\tilde{A}}(\epsilon) \simeq \mathrm{Ind}_{N}^{G}(U)$$

where U is viewed as $\tilde{G}$-module and $\epsilon : \mathbb{C} \to \mathbb{C}$ is the inverse character. This isomorphism is realized by

$$u \otimes f \mapsto (g \mapsto f(g)\pi(g)(u)).$$

Thus in order to decompose $\mathrm{Ind}_{N}^{G}(U)$ it suffices to decompose $\mathrm{Ind}_{\mathbb{C}^\times}^{\tilde{A}}(\epsilon)$.

Claim: The extension $\tilde{A}$ is defined by a co-cycle with values in μ_m. To see this, define a section $s : A \to \tilde{A}$ such that $s(a)$, for every $a \in A$, acts on $\mathrm{Ind}_{\mathbb{C}^\times}^{\tilde{A}}(\epsilon)$ as a linear transformation of determinant 1. Then the extension $\tilde{A}$ is determined by the co-cycle $c(a, b)$ defined by

$$s(a)s(b) = c(a, b)s(ab).$$

After taking determinant of both sides, we get $c(a, b)^m = 1$, as claimed.

Using well known facts from representations of finite groups, we can now write

$$\mathrm{Ind}_{\mathbb{C}^\times}^{\tilde{A}}(\epsilon) \simeq \oplus_E \dim(E) \cdot E$$

where the sum runs over all irreducible representations E of $\tilde{A}$ such that $\mathbb{C}^\times \subset \tilde{A}$ acts by ϵ. Call such representations genuine.

LEMMA 9.3. *Let U be an irreducible representation of N such that $G_U = G$. With notation as above*

$$\mathrm{Ind}_N^G U = \bigoplus_E \dim(E) \cdot U \otimes E$$

where the sum is over all irreducible genuine representations E of $\tilde{A}$. Representations $U \otimes E$ are irreducible and mutually non-isomorphic.

PROOF. It remains to prove the last sentence. Let E_1 and E_2 be any two genuine $\tilde{A}$-modules. Since U is irreducible N-module,

$$\mathrm{Hom}_N(U \otimes E_1, U \otimes E_2) \simeq \mathrm{Hom}_{\mathbb{C}}(E_1, E_2).$$

Thus

$$\mathrm{Hom}_G(U \otimes E_1, U \otimes E_2) \simeq \mathrm{Hom}_{\tilde{A}}(E_1, E_2).$$

The lemma follows. □

We now briefly discuss the lemma when A is abelian. Then $\tilde{A}$ is a two-step nilpotent group. The commutator of elements in $\tilde{A}$ defines a skew-linear form on $A \times A$

$$\langle a, b \rangle = [s(a), s(b)].$$

Since the order of A is m, the skew form, and therefore the commutator, takes values in μ_m. The dimension of any genuine irreducible representation E is equal to $\sqrt{|\bar{A}|}$ where $\bar{A}$ is the quotient of A by the kernel of the skew form $\langle a, b \rangle$. Furthermore, any two irreducible representations of G containing U are A-character twists of one another. Moreover, two character twists are isomorphic if and only if the characters coincide on the kernel of the skew form.

Finally we combine the two lemmas to obtain the general case.

PROPOSITION 9.4. *Let U be an irreducible N-module, and G_U its stabilizer in G. Let $A_U = G_U/N$. Let $\tilde{A}_U$ be the central extension of A_U arising from the projective action of G_U on U. Then*

$$\mathrm{Ind}_N^G U = \bigoplus_E \dim(E) \cdot \mathrm{Ind}_{G_U}^G (U \otimes E)$$

where the sum is over all irreducible genuine representations E of $\tilde{A}_U$. This is a decomposition of $\mathrm{Ind}_N^G U$ into isotypic summands.

We remark that a study of the type of problems considered in this appendix can be found in the paper [T] of M. Tadić, where it was shown that the restriction of an irreducible representation of $\mathrm{GL}_n(F)$ to $\mathrm{SL}_n(F)$ is multiplicity-free.

Acknowledgements.

This paper is dedicated to Marko Tadić on the occasion of his 70th birthday. W.T.G. is partially supported by a Singapore government MOE Tier 1 grant R-146-000-320-114 and the Tan Chin Tuan Centennial Professorship at NUS. G. Savin is partially supported by a National Science Foundation grant DMS-1901745 and by a Simons Foundation gift 946504. The authors would like to thank Skip Garibaldi for pointing them to the notion of Jordan pairs developed in Loos' book [L].

References

[BH] C. J. Bushnell and G. Henniart, Local Langlands conjecture for GL(2), Springer-Verlag, Berlin-Heidelberg, 2006.

[dM] T. De Medts, *Structurable algebras of skew-dimension one and Hermitian cubic norm structures*, Comm. Algebra **47** (2019), 154–172.

[GS] W. T. Gan and G. Savin, *On minimal representations definitions and properties*, Represent. Theory **9** (2005), 46–93.

[GS2] W. T. Gan and G. Savin, *Twisted composition algebras and Arthur packets of triality* Spin(8), Pure and Applied Math. Q. **18** (2022), 1951–2130.

[GZ] H. Grobner and S. Žunar, *On the notion of the parabolic and the cuspidal support of smooth-automorphic forms and smooth-automorphic representations*, Preprint, `arXiv:2108.06369`.

[Kn] M. Kneser, *Galois-Kohomologie halbeinfacher algebraischer Gruppen über* $\mathfrak{p}$*-adischen Körpern II*, Math. Z. **89** (1965), 250–272.

[KMRT] M. Knus, A. Merkurjev, M. Rost and J.-P. Tignol, The Book of Involutions, AMS Colloquium Publications, Vol. **44**, American Mathematical Society, Providence, RI, 1998.

[Ku] S. Kudla, *On the local theta-correspondence*, Invent. Math. **83** (1986), 229–255.

[L] O. Loos, Jordan pairs, Lecture Notes in Math., Vol. **460**, Springer-Verlag, Berlin-New York, 1975.

[MS] K. Magaard and G. Savin, *Exceptional* Θ*-correspondences I*, Compositio Math. **107** (1997), 89–123.

[R] B. Roberts, *The theta correspondence for similitudes*, Israel J. Math. **94** (1996), 285–317.

[Ru] K. Rummelhart, *Minimal representations of exceptional p-adic groups*, Represent. Theory **1** (1997), 133–181.

[T] M. Tadić, *Notes on representations of non-archimedean* SL(n), Pacific J. Math. **152** (1992), 375–396.

[W] N. Wallach, C^∞ *vectors*, in: Representations of Lie groups and quantum groups (Trento, 1993), Pitman Res. Notes Math. Ser., **311**, Longman Sci. Tech., Harlow, 1994, pp. 205–270.

Iznimne theta korespondencije za grupe sličnosti

Petar Bakić, Wee Teck Gan i Gordan Savin

Sažetak. U ovom radu opisujemo sistematičan način konstrukcije dualnih parova grupa sličnosti. Proučavamo theta korespondencije do kojih dolazi na ovaj način, te dokazujemo da Howeova dualnost vrijedi za dualni par grupa sličnosti ako i samo ako vrijedi za reduktivni dualni par koji koristimo u našoj konstrukciji. Posebnu pažnju posvećujemo primjerima iznimnih theta korespondencija.

Petar Bakić
Department of Mathematics
University of Utah
Salt Lake City, UT, USA
E-mail: bakic@math.utah.edu

Wee Teck Gan
Department of Mathematics
National University of Singapore
10 Lower Kent Ridge Road, Singapore 119076
E-mail: matgwt@nus.edu.sg

Gordan Savin
Department of Mathematics
University of Utah
Salt Lake City, UT, USA
E-mail: savin@math.utah.edu

Received: 22.6.2023.
Revised: 17.10.2023.
Accepted: 14.11.2023.

RAD HAZU. MATEMATIČKE ZNANOSTI
Vol. 28 = 558 (2024): 223-243
DOI: https://doi.org/10.21857/ygjwrc21ly

ON PRIME ELEMENTS IN COMMUTATIVE DOMAINS

Boris Širola

To Marko, with respect and admiration

Abstract. We present some results concerning prime elements in integral domains. In particular we deal with the following question: Does every order in an algebraic number field has infinitely many prime elements? Then we show that for real quadratic fields the answer to that question is positive. We also give certain partial results and examples about prime polynomials in two or more variables with coefficients from arbitrary integral domain.

Introduction

Recall that a commutative ring with identity is called an integral domain if the product of any two nonzero elements is nonzero. Given an integral domain A it is interesting to understand the set $\operatorname{Irr} A$ of all irreducible elements in A, and in particular its subset $\operatorname{Pr} A$ of all prime elements in A. (Note here that if A is moreover a UFD, then $\operatorname{Pr} A = \operatorname{Irr} A$; see Proposition 1.6.) In general it might be considerably more difficult, and in fact more interesting, to see if a given element of A is prime than if it is irreducible.

There are not many statements about prime elements, and there are not many examples of prime elements in rings that are not UFDs, in the existing literature. Also those results and examples that are known are scattered throughout various books and papers. The purpose of this work is to present a contribution to the current knowledge. In particular suppose $\mathbb{K}$ is an algebraic number field and let $\mathcal{O}_{\mathbb{K}}$ be its ring of integers. Recall that a subring $R \leq \mathcal{O}_{\mathbb{K}}$ is called an *order* in $\mathbb{K}$ if the index $(\mathcal{O}_{\mathbb{K}} : R)$ is finite, for R considered as a subgroup of the additive group $(\mathcal{O}_{\mathbb{K}}, +)$. In particular, $\mathcal{O}_{\mathbb{K}}$ is called the maximal order. As a well known fact we have that an order is a Noetherian integral domain in which every nonzero prime ideal is moreover maximal; see, e.g., [11, Ch. I, (12.2) Prop.]. Further, an order $R \neq \mathcal{O}_{\mathbb{K}}$ is not integrally

2020 *Mathematics Subject Classification.* Primary 13G05; Secondary 11R04, 11R09.
Key words and phrases. Prime element, irreducible element, integral domain, unique factorization domain, quadratic field, ring of integers, order.

closed in $\mathbb{K}$, and thus such R is not a UFD; see, e.g., [7, Ex. 6 for Ch. II, p. 337]. Therefore the orders are good candidates for exploring the sets of their prime elements.

The theorem given below illustrates one of the principal aims of our paper. In order to state it first recall the following. Assume $\mathbb{K}|\mathbb{F}$ is a finite field extension. For any $x \in \mathbb{K}$ define an ($\mathbb{F}$-linear) map $f_x : \mathbb{K} \to \mathbb{K}$, $f_x(y) = xy$. Then define a norm map

$$N_{\mathbb{K}|\mathbb{F}} : \mathbb{K} \to \mathbb{F}, \quad N_{\mathbb{K}|\mathbb{F}}(x) = \det f_x.$$

Clearly, the map $N = N_{\mathbb{K}|\mathbb{F}}$ is totally multiplicative; i.e., for $x, y \in \mathbb{K}$ we have $N(xy) = N(x)N(y)$. Now we are ready to state our result.

THEOREM 0.1. *Let $\mathbb{K}$ be an algebraic number field. Suppose R is an order in $\mathbb{K}$ and $\pi \in R$ is an element such that $|N_{\mathbb{K}|\mathbb{Q}}(\pi)| = p$, for some prime number $p \in \mathbb{N}$. Then π is a prime element of R. Also if $\rho \in R$ is such that $|N_{\mathbb{K}|\mathbb{Q}}(\rho)| = m$, where m is a composite number which is not of the form $m = p^k$ for some prime number $p \in \mathbb{N}$ and $k \geq 1$, then ρ is not a prime element of R.*

For a quadratic field $\mathbb{K}$ and $R = \mathcal{O}_{\mathbb{K}}$, the conclusion that under the given assumptions the element π is irreducible is well known, and easy to show; see [12, Thm. 9.24], and Lemma 2.1(iii) below. Thus our result strengthen the later one.

The paper is organized as follows. Section 1 is preparatory. There we first introduce our notation and recall some terminology and certain well known results that will be needed in what follows. Also we prove some results that might be essentially known, but we are not aware of any appropriate reference; see Lemma 1.4, Proposition 1.6 and Corollary 1.7. In Section 2 we prove the above theorem. There we also deal with the question asking whether any order R in an algebraic number field $\mathbb{K}$ has infinitely many prime elements. As one might expect, this question is closely related to the problem of solvability for certain special Diophantine equations; and so it is likely that it would not be easy to answer the posed question in general. At the same time as a relatively simple fact we note that for real quadratic fields the answer to the later question is positive; see Corollary 2.6. As one more interesting observation in Proposition 2.10 we show that there are infinitely many numbers $d = pq$, where $p, q \in \mathbb{N}$ are different primes satisfying $p \equiv 5 \pmod 8$ and $q \equiv 1, 3 \pmod 4$, so that the ring of integers $\mathcal{O}_{\mathbb{K}}$ of the quadratic field $\mathbb{K} = \mathbb{Q}(\sqrt{d})$ is not a UFD; i.e., it is not a PID. Given some interesting integral domain A it is a standard problem to understand whether particular polynomials in two or more variables, with coefficients from A, are irreducible or not. A number of the corresponding results are known, in particular when A is moreover a field; see, e.g., [10]. In Section 3 we present some basic results and examples where for arbitrary integral domain A we deduce that certain A-polynomials

are prime elements of the corresponding polynomial ring. As the central result there we have Proposition 3.4.

1. Some basic results

In what follows every ring we consider is commutative and with identity. Given a ring A, by $A^\times$ we denote the set of its nonzero elements and by A^* the group of its invertible elements (i.e., units). For any positive integer n by $A[X] = A[X_1, \ldots, X_n]$ we denote the ring of A-polynomials in variables $X_1, \ldots, X_n$. Recall that a nonzero polynomial $f \in A[X]$ is reducible if $f \notin A[X]^*$ and f can be written as a product $f = gh$, for some non-invertible polynomials $g, h \in A[X]$. Otherwise we say that f is irreducible. As it is customary, a unique factorization domain will be abbreviated as UFD and a principal ideal domain as PID.

It is well known that the above notions of polynomial (ir)reducibility can be generalized. For the convenience of the reader we recall some terminology, and introduce the corresponding notation. For all the unexplained terminology and notation, or proofs of some known results, see for example [8], [9] or [13]. Given a ring A, elements $x, y \in A$ are associates if there is some $u \in A^*$ such that $x = uy$. We write $x \sim y$ if x and y are associates. Then $\sim$ is an equivalence relation on A. For any $x \in A$ define $[x]$ to be the corresponding class in the quotient set $A/\sim$. An element $c \in A^\times$ is irreducible in A if $c \notin A^*$ and the following holds: *If $c = ab$ for some $a, b \in A$, then either $a \in A^*$ or $b \in A^*$.* By $\operatorname{Irr} A$ we denote the set of all irreducible elements in A. Further for two elements $x, y \in A$, by $x|y$ we denote the fact that x divides y. An element $p \in A^\times$ is prime in A if $p \notin A^*$ and the following holds: *If $p|ab$ for some $a, b \in A$, then $p|a$ or $p|b$.* By $\operatorname{Pr} A$ we denote the set of all prime elements in A.

Observe that the notions of an irreducible element and prime element are strictly related to the ring under consideration. More precisely, we can have two rings $A \subseteq B$ and an element $c \in A$ which is irreducible (resp. prime) in A, but the same does not hold in B. On the other hand we can have $c \in A$ such that c is irreducible (resp. prime) as an element of B, but it is not the same true for A. Related to this observation it might be convenient to state the following simple result; cf. Corollary 1.7 given below.

Proposition 1.1. *Let A be an integral domain and $m < n$ positive integers. Define $R_0 = A$, the ring of polynomials $R_m = A[X_1, \ldots, X_m]$ and analogously R_n. Also define $R_\infty = A[X_1, X_2, \ldots]$, the ring of A-polynomials in infinitely many variables. We consider the chain of subrings $A \leq R_m \leq R_n \leq R_\infty$, in the obvious way. If $c \in R_m$ is irreducible in R_m, then it is irreducible both as an element of R_n and as an element of R_∞. That is we have the inclusions*

$$\operatorname{Irr} A \subseteq \operatorname{Irr} R_m \subseteq \operatorname{Irr} R_n \subseteq \operatorname{Irr} R_\infty.$$

PROOF. First note that $R_m^* = R_n^* = R_\infty^* = A^*$. It is sufficient to treat the case of the ring R_∞. Thus assume that for an element $0 \neq c \notin R_\infty^*$ there are some $a, b \in R_\infty$ satisfying $c = ab$. Then it is clear there is a positive integer N so that $c, a, b \in A[X_1, \ldots, X_N]$. Here recall that given any integer $\ell \geq 2$ and any $1 \leq k < \ell$ we have an isomorphism

$$A[X_1, \ldots, X_\ell] \cong A[X_1, \ldots, X_k]\big[X_{k+1}, \ldots, X_\ell\big].$$

Hence it is immediate that in fact we can take $N = m$. So, if c is irreducible in R_m, we conclude that $a \in R_\infty^*$ or $b \in R_\infty^*$; i.e., that c is irreducible as an element of R_∞. □

For later use recall also the following well known facts.

LEMMA 1.2. *Let A be a ring.*

(i) An element $x \in A^\times$ is irreducible (resp. prime) if and only if every $y \in [x]$ is irreducible (resp. prime).

(ii) Assume that A is an integral domain. If an element $p \in A$ is prime, then it is irreducible as well; i.e., we have the inclusion $\Pr A \subseteq \operatorname{Irr} A$.

(iii) Assume that A is a PID. An element $p \in A$ is prime if and only if it is irreducible; i.e., we have the equality $\Pr A = \operatorname{Irr} A$.

Recall also one more well known fact emphasizing the role of prime elements in the ideal theory.

LEMMA 1.3. *Given a ring A, $p \in A^\times$ is a prime element if and only if the principal ideal Ap of A is prime.*

Related to the last two claims of Lemma 1.2 we should note some further facts. As we already mentioned, for a particular element of a given ring it is always more demanding to see whether it is prime than if it is irreducible. Here we want to state an interesting characterization of UFDs within the class of Noetherian integral domains; see Proposition 1.6 below. As the referee pointed out to us, a proof of the following auxiliary lemma can be found in [1, Theorems 3.2.1 and 3.2.2]; and so we omitted our proof given in the first version of the paper.

LEMMA 1.4. *Let A be a Noetherian integral domain. Then A is a factorization domain; i.e. every nonzero non-invertible element $x \in A$ can be written as a finite product of irreducible elements (perhaps in a non-unique way). In particular, in every Noetherian integral domain which is not a field there is at least one irreducible element.*

REMARK 1.5. Here it is instructive to note that there are UFDs that are not Noetherian rings. For example if A is a UFD, then the ring of polynomials $R_\infty = A[X_1, X_2, \ldots]$ is a UFD as well; which is easy to show having in mind Proposition 1.1. Obviously, R_∞ is not Noetherian.

Now we are ready for the announced proposition, which is a stronger statement than the one of Lemma 1.2(iii).

PROPOSITION 1.6. *Let A be a factorization domain; e.g., A is a Noetherian domain. Then the following are equivalent.*

(a) The ring A is a UFD.
(b) $\Pr A = \operatorname{Irr} A$.

PROOF. As it was again pointed out to us by the referee, a proof that (a) implies (b) can be found in [1, Thm. 3.3.2].

Now suppose that (b) holds. In order to see that A is a UFD it must be shown the uniqueness condition in the definition of a UFD. But this is an easy inductive argument; the same one as for the basic fact that every PID is a UFD as well. □

The next observation is an analogue of Proposition 1.1, where now instead of irreducible elements we consider prime elements.

COROLLARY 1.7. *Let A be a UFD and $m < n$ positive integers. Let R_m, R_n and R_∞ be the same polynomial rings as in Proposition* 1.1. *If $p \in R_m$ is prime in R_m, then it is prime both as an element of R_n and as an element of R_∞. That is we have the inclusions*

$$\Pr R_m \subseteq \Pr R_n \subseteq \Pr R_\infty.$$

PROOF. The rings R_m, R_n and R_∞ are UFDs; see Remark 1.5. Now one just has to combine Propositions 1.6 and 1.1. □

REMARK 1.8. As a concrete and very useful consequence of the above corollary we have the following nontrivial fact. Suppose A is a UFD. Within the ring of polynomials $R = A[X_1, \ldots, X_m, T_1, \ldots, T_n]$ we consider $S = A[X_1, \ldots, X_m]$ as a subring in the standard way. Suppose $p \in S$ is an irreducible polynomial and that $g, h \in R$ are some polynomials such that p divides the polynomial product gh. Then p divides g or h; i.e., p is a prime as an element of R.

2. Examples of prime elements

Suppose $\mathbb{K}$ is an algebraic number field; i.e., we have a finite field extension $\mathbb{K}|\mathbb{Q}$. Let $\mathcal{O}_\mathbb{K}$ be the corresponding ring of integers. For the convenience of the reader here we include one more lemma which gives three well known claims. A proof of the first one is an easy consequence of the fact that $\mathcal{O}_\mathbb{K}$ has a free $\mathbb{Z}$-basis with $[\mathbb{K} : \mathbb{Q}]$ elements; see [7, Ch. II]. For a proof of the second claim (ii) see [7, Ch. IV, (4.2)]. Using that the norm $N = N_{\mathbb{K}|\mathbb{Q}}$ is totally multiplicative and taking into account (ii), a proof of (iii) is in fact the same as in [12, Thm. 9.24] where $\mathbb{K}$ is a quadratic field; see, e.g., [1, Thm. 9.2.3].

LEMMA 2.1. *Let $\mathbb{K}$ be an algebraic number field, $\mathcal{O}_{\mathbb{K}}$ its ring of integers and $N = N_{\mathbb{K}|\mathbb{Q}}$ the corresponding norm map.*

(i) The restriction of N to $\mathcal{O}_{\mathbb{K}}$ have values in $\mathbb{Z}$; i.e., we have the restricted norm map $N : \mathcal{O}_{\mathbb{K}} \to \mathbb{Z}$.

(ii) An element $\alpha \in \mathcal{O}_{\mathbb{K}}$ is a unit if and only if $|N(\alpha)| = 1$.

(iii) If $c \in \mathcal{O}_{\mathbb{K}}$ is such that $|N(c)| = p$, for some prime number $p \in \mathbb{N}$, then c is an irreducible element.

For later use we also state the following known observation about finitely generated abelian groups, which is interesting in itself. Although we are not aware of any suitable reference, its (somewhat involved) proof will be omitted as it is not crucial for the understanding of what follows.

LEMMA 2.2. *Let A be an $n \times n$ matrix with entries from $\mathbb{Z}$. Then define an endomorphism $z \mapsto Az$ of the additive group $\mathbb{Z}^n$ and consider its image $A\mathbb{Z}^n$.*

(i) If A is a regular matrix, then the quotient group $\mathbb{Z}^n/A\mathbb{Z}^n$ is finite of order $|\det A|$.

(ii) If A is not regular and so its rank $\operatorname{rk}(A) < n$, then the rank of the quotient group $\mathbb{Z}^n/A\mathbb{Z}^n$ is equal to $n - \operatorname{rk}(A)$.

Now we are prepared for the following.

PROOF OF Theorem 0.1.
As R is a free abelian additive group of rank $[\mathbb{K} : \mathbb{Q}] = n$, we can choose some basis $\mathcal{B} = (v_1, \dots, v_n)$ of R. For arbitrary $\rho \in R$ consider the map $f_\rho : R \to R$ defined as before by $f_\rho(r) = \rho r$. And let then $A = (a_{ij})$ be an $n \times n$ matrix with entries from $\mathbb{Z}$ defined by

$$f_\rho(v_j) = \sum_{j=1}^{n} a_{ij} v_j, \quad \text{for } j = 1, \dots, n.$$

Next define a map $\phi : R \to \mathbb{Z}^n$ so that for $v = z_1 v_1 + \cdots + z_n v_n$, where $z_i \in \mathbb{Z}$, we put $\phi(v) = (z_1, \dots, z_n)$. Clearly, ϕ is an isomorphism of additive groups. Further define a map

$$\vartheta : R/R\rho \to \phi(R)/\phi(R\rho)$$

so that for $v \in R$ we put $\vartheta(v + R\rho) = \phi(v) + \phi(R\rho)$. It is easy to check that ϑ is a well defined isomorphism of groups. Here also note that

$$\phi(R)/\phi(R\rho) = \mathbb{Z}^n/A\mathbb{Z}^n.$$

Taking into account the claim (i) of Lemma 2.2 we conclude that

$$\operatorname{card}(R/R\rho) = |\det A|.$$

It remains to observe that $\det A = \det f_\rho = N_{\mathbb{K}|\mathbb{Q}}(\rho)$.

Now let $\rho = \pi \in R$ be as in the statement of our theorem. As we have that $|N_{\mathbb{K}|\mathbb{Q}}(\pi)| = p$ is a prime number in $\mathbb{N}$, it is immediate that the quotient

ring $R/R\pi$ is isomorphic to the field $\mathbb{Z}/p\mathbb{Z}$. And so the principal ideal $R\pi$ is maximal and therefore prime as well. By Lemma 1.3, π is prime as an element of R.

On the other hand suppose ρ is such that $|N_{\mathbb{K}|\mathbb{Q}}(\rho)| = m$, for m as in the statement of the theorem. Now we get that $R/R\rho$ is a ring with m elements. But such a ring cannot be an integral domain, and consequently ρ cannot be a prime element. Namely otherwise it would follow that this ring is moreover a field; i.e., a Galois field. This is clearly impossible. □

Suppose we have algebraic number fields $\mathbb{F}$ and $\mathbb{K}$ so that $\mathbb{K}|\mathbb{F}|\mathbb{Q}$ and an order $R \leq \mathcal{O}_{\mathbb{K}}$. What we would like to find out are some prime elements of R. A helpful idea is to have some prime elements $\mathfrak{p} \in \operatorname{Pr}\mathcal{O}_{\mathbb{F}}$ such that the norm $N_{\mathbb{F}|\mathbb{Q}}(\mathfrak{p}) \in \operatorname{Pr}\mathbb{Z}$. And then we can try to find some elements $\pi \in R$ satisfying $N_{\mathbb{K}|\mathbb{F}}(\pi) = \mathfrak{p}$. Clearly every such π will be a prime element of R. It might be instructive to see how that "search in stages" works at one interesting example.

EXAMPLE 2.3. Consider the quadratic field $\mathbb{F} = \mathbb{Q}(i)$ and the biquadratic field $\mathbb{K} = \mathbb{Q}(i, \sqrt{2})$. Then $\mathcal{O}_{\mathbb{F}} = \mathbb{Z}[i]$, the ring of Gaussian integers. Also with a little work one can show that the ring of integers $\mathcal{O}_{\mathbb{K}}$ consists of all elements of the form

$$w = a + bi + c\sqrt{2} + di\sqrt{2}, \qquad \text{for } a, b, c, d \in \mathbb{Z}. \tag{2.1}$$

It is a standard fact that the norm $N_{\mathbb{F}|\mathbb{Q}}(a + bi) = a^2 + b^2$. At the same time for w as above we have that

$$N_{\mathbb{K}|\mathbb{F}}(w) = (a + bi)^2 - 2(c + di)^2,$$

and also

$$N_{\mathbb{K}|\mathbb{Q}}(w) = N_{\mathbb{F}|\mathbb{Q}}(N_{\mathbb{K}|\mathbb{F}}(w)) = (a^2 - b^2 - 2c^2 + 2d^2)^2 + 4(ab - 2cd)^2. \tag{2.2}$$

As the first useful observation we have the following claim.

CLAIM. *The ring of integers $\mathcal{O}_{\mathbb{K}}$ is not a UFD.*

In order to prove this we begin by showing that there is no $w \in \mathcal{O}_{\mathbb{K}}$ such that $|N_{\mathbb{K}|\mathbb{Q}}(w)| = 2$. Namely suppose to the contrary, that $N_{\mathbb{K}|\mathbb{Q}}(w) = \pm 2$ for some w. If we write w as in (2.1) then by the above expression (2.2) it is clear that $a^2 - b^2$ is even, and therefore $N_{\mathbb{K}|\mathbb{Q}}(w)$ must be divisible by 4; which is impossible. Now as an immediate consequence we deduce that $\sqrt{2} \in \operatorname{Irr}\mathcal{O}_{\mathbb{K}}$. But we claim that $\sqrt{2}$ is not a prime element. Namely $\sqrt{2}$ divides $(1+i)(1-i)$, but does not divide neither of the two factors. Namely suppose that we have some $w \in \mathcal{O}_{\mathbb{K}}$ satisfying $1 \pm i = \sqrt{2}w$. If we write w as in (2.1) it follows that in particular $1 = x\sqrt{2} + 2z$ for some integers x and z. But this is impossible. Thus, as $\mathcal{O}_{\mathbb{K}}$ is a Noetherian domain and $\operatorname{Pr}\mathcal{O}_{\mathbb{K}} \neq \operatorname{Irr}\mathcal{O}_{\mathbb{K}}$, by Proposition 1.6 our Claim follows.

Further recall the description of the set $\Pr \mathbb{Z}[i]$; see, e.g., [11, Ch. I, (1.4) Thm.]. Every prime $\mathfrak{p}$ of $\mathbb{Z}[i]$, up to multiplication by an invertible element, has one of the following three forms:

(**1**) $\mathfrak{p} = 1 + i$;
(**2**) $\mathfrak{p} = \alpha + \beta i$, where $\alpha^2 + \beta^2 = p$ with $\alpha > |\beta| > 0$ and $p \equiv 1 \pmod 4$;
(**3**) $\mathfrak{p} = p$, where $p \equiv 3 \pmod 4$.

(In (**2**) and (**3**) the symbol p denotes a prime in $\mathbb{N}$.) First observe that $\mathfrak{p} = 1 + i$ is not suitable for our approach as there is no $w \in \mathcal{O}_{\mathbb{K}}$ satisfying $N_{\mathbb{K}|\mathbb{F}}(w) = 1 + i$. Also for $\mathfrak{p}$ of type (**3**) we can have some $\rho \in \mathcal{O}_{\mathbb{K}}$ such that $N_{\mathbb{K}|\mathbb{F}}(\rho) = \mathfrak{p}$, but at the same time we have $N_{\mathbb{F}|\mathbb{Q}}(\mathfrak{p}) = p^2$ and therefore it is not clear whether such ρ is prime or not. (Note that for the above considered non-prime element $w = \sqrt{2}$ the quotient ring $\mathcal{O}_{\mathbb{K}}/\mathcal{O}_{\mathbb{K}}\sqrt{2}$ is isomorphic to $\mathbb{Z}/2\mathbb{Z} \times \mathbb{Z}/2\mathbb{Z}$.) But the primes of type (**2**) are good for our approach. Namely now the equality $N_{\mathbb{K}|\mathbb{F}}(w) = \mathfrak{p}$, where w is as in (2.1), is equivalent to the system of Diophantine equations

$$\begin{cases} a^2 - b^2 - 2c^2 + 2d^2 &= \alpha \\ 2ab + 4cd &= \beta \end{cases} \tag{2.3}$$

As an easy exercise we have to check that the smallest prime $p \in \mathbb{N}$ satisfying both $p \equiv 1 \pmod 4$ and $\alpha^2 + \beta^2 = p$, and such that the above system (2.3) has a solution, is $p = 41$. For example for $p = 29$ the only two possibilities for (α, β) as in (**2**) are $(5, \pm 2)$. But then by the second equation in (2.3) we have that ab is necessarily odd. And then the left-hand side of the first equation is even; which cannot be. Similarly we rule out every $p \in \{5, 13, 17, 37\}$. On the other hand for $p = 41$ we have that (α, β) is either $(5, 4)$ or $(5, -4)$. Thus the system (2.3) becomes

$$\begin{cases} a^2 - b^2 - 2c^2 + 2d^2 &= 5 \\ ab + 2cd &= \pm 2 \end{cases}$$

By inspection we obtain as a conclusion that for example every π from the set

$$\mathcal{S}(41) = \{2 + i + i\sqrt{2}, 3 - 2i + 2\sqrt{2} + 2i\sqrt{2}, 6 + i - 4\sqrt{2} + i\sqrt{2}, \ldots\}$$

is prime in $\mathcal{O}_{\mathbb{K}}$. It is easy to see that the next smallest p of the form as in (**2**) is 97, when for (α, β) we again have just two possibilities; either $(9, 4)$ or $(9, -4)$. For this $p = 97$ we have for example as primes from $\mathcal{O}_{\mathbb{K}}$ the four elements $3 \pm \sqrt{2} \pm i\sqrt{2}$.

Perhaps it might be interesting to observe here one more thing which is motivated by the above two examples of p. Namely suppose there is an odd number $x > 1$ such that $p = x^4 + 16$ is a prime number. Then for $(\alpha, \beta) \in \{(x^2, \pm 4)\}$ the system (2.3) becomes

$$\begin{cases} a^2 - b^2 - 2c^2 + 2d^2 &= x^2 \\ ab + 2cd &= \pm 2 \end{cases}$$

Clearly, $(a,b,c,d) = (\pm x, 0, \pm 1, \pm 1)$ are solutions of the later system. As an interesting fact we have that $3^4 + 16 = 97$, $5^4 + 16 = 641$, $7^4 + 16 = 2417$, $9^4 + 16 = 6577$ and $11^4 + 16 = 14567$ are primes. On the other hand for $x = 13$ or 15 we obtain composite numbers $13^4 + 16 = 28577 = 17 \cdot 1681$ and $15^4 + 16 = 50641 = 89 \cdot 569$. But $17^4 + 16 = 83537$ is again a prime. It would be nice to know if there is infinitely many primes of the form $x^4 + 16$ for $x > 1$ odd number.

It is likely that for the field $\mathbb{K} = \mathbb{Q}(i, \sqrt{2})$ the set $\operatorname{Pr} \mathcal{O}_{\mathbb{K}}$ is infinite, but we do not know if this is the case. In general it would be interesting to answer the following question.

QUESTION. *Given an algebraic number field $\mathbb{K}$ and an order R in $\mathbb{K}$, is the set of primes $\operatorname{Pr} R$ necessarily infinite?*

To the end of this section we focus on real quadratic fields. Our first goal is to show that for these fields the answer to the above question is positive. For that purpose let $d \neq 1$ be a square-free positive integer and define $\omega = (1 + \sqrt{d})/2 \in \mathbb{C}$. Define the following subrings of the quadratic field $\mathbb{K} = \mathbb{Q}(\sqrt{d})$:

$$A_d = \mathbb{Z}[\sqrt{d}] = \{x + y\sqrt{d} \mid x, y \in \mathbb{Z}\},$$
$$B_d = \mathbb{Z}[\omega] = \{x + y\omega \mid x, y \in \mathbb{Z}\} \quad \text{if } d \equiv 1 \pmod 4.$$

The statement (i) of the next lemma is clear, while the other two are well known facts; cf. Lemma 2.1(ii).

LEMMA 2.4. *For the field $\mathbb{K}$ and the rings A_d and B_d the following hold.*

(i) We have $\mathcal{O}_{\mathbb{K}} = A_d$ for $d \equiv 2, 3 \pmod 4$, and $\mathcal{O}_{\mathbb{K}} = B_d$ for $d \equiv 1 \pmod 4$. Further for $d \equiv 1 \pmod 4$ the ring A_d is an order in $\mathbb{K}$ with the index of additive groups $(\mathcal{O}_{\mathbb{K}} : A_d) = 2$.

(ii) The corresponding norm map $N : \mathbb{K} \to \mathbb{Q}$ is given by $N(x + y\sqrt{d}) = x^2 - dy^2$.

(iii) Let C be either some ring A_d or B_d for $d \equiv 1 \pmod 4$. Then an element $u \in C$ is invertible if and only if $|N(u)| = 1$.

REMARK 2.5. As the first basic observation related to the above Question we have that for the rings A_d we have the following:

> For each square-free positive integer $d \neq 1$ the ring A_d has infinitely many irreducible elements.

(In particular again by Proposition 1.6 we have that for $d \equiv 2, 3 \pmod 4$, such that $\mathcal{O}_{\mathbb{K}} = A_d$ is a PID, the set of primes $\operatorname{Pr} \mathcal{O}_{\mathbb{K}}$ is infinite.) Namely choose $k \in \mathbb{Z} \setminus \{0, \pm 1\}$ such that the generalized Pell equation $x^2 - dy^2 = k$ has infinitely many solutions in integers and the absolute value $|k|$ is the minimal possible. Now if $(a, b) \in \mathbb{Z}^2$ is any solution, then the elements $a \pm b\sqrt{d} \in A_d$ are irreducible. For more details about the generalized Pell equations see e.g. [6, 8.3 and 10.3-10.5].

Now recall a well known fact that for $d \equiv 2,3 \pmod 4$ every order in $\mathbb{K} = \mathbb{Q}(\sqrt{d})$ is of the form

$$R_m = \{x + my\sqrt{d} \mid x, y \in \mathbb{Z}\}, \tag{2.4}$$

for some positive integer m; where in particular $R_1 = \mathcal{O}_{\mathbb{K}}$. Also for $d \equiv 1 \pmod 4$ every order in $\mathbb{K}$ is of the form

$$R_m = \{x + my\omega \mid x, y \in \mathbb{Z}\}, \tag{2.5}$$

for some positive integer m; and again $R_1 = \mathcal{O}_{\mathbb{K}}$. The following corollary presents the mentioned positive answer to the above posed Question. Here we recall one classical but nontrivial theorem, due to Dirichlet, in a form suitable for our purposes; see [5, p. 417] and [2, Abschn. 10]. Namely suppose $q(x, y) = ax^2 + bxy + cy^2$ is an integral primitive quadratic form whose discriminant $b^2 - 4ac$ is not a square. Then q represents infinitely many primes in $\mathbb{N}$.

Corollary 2.6. *Let $d \neq 1$ be a square-free positive integer and R be an order in $\mathbb{K} = \mathbb{Q}(\sqrt{d})$. Then the set of prime elements* $\Pr R$ *is infinite.*

Proof. For any positive integer m define a quadratic form

$$q_m(x, y) = \begin{cases} x^2 - dm^2y^2, & \text{if } d \equiv 2,3 \pmod 4, \\ x^2 + mxy + \frac{1-d}{4}m^2y^2, & \text{if } d \equiv 1 \pmod 4; \end{cases}$$

i.e., $q_m(x, y) = N(x+my\sqrt{d})$ if $d \equiv 2,3 \pmod 4$ and $q_m(x, y) = N(x+my\omega)$ if $d \equiv 1 \pmod 4$. Clearly every q_m is primitive and its discriminant is not a square. Thus by the above stated Dirichlet's theorem there are infinitely many primes $p \in \mathbb{N}$ such that the equation

$$q_m(x, y) = p \tag{2.6}$$

is solvable in integers. In particular for $d \equiv 2,3 \pmod 4$ we obtain a generalized Pell equation $x^2 - dm^2y^2 = p$. And each of these equations has infinitely many solutions $(x, y) \in \mathbb{Z}^2$. By Theorem 0.1 for every such solution (x, y) the element $x + my\sqrt{d}$ belongs to $\Pr R$. Similarly for $d \equiv 1 \pmod 4$ and some solution (x, y) of (2.6) we have that the element $x + my\omega$ belongs to $\Pr R$. Thus we have the corollary proved. □

Note that in the proof of the latter corollary in fact we needed a weaker result than the mentioned Dirichlet's theorem is. More precisely it would suffice to know that for each form q_m there is at least one prime $p \in \mathbb{N}$ so that at least one of the two Diophantine equations $q_m(x, y) = \pm p$ has a solution in integers. Then we can conclude that the corresponding set $\Pr R$ is infinite. For $d \equiv 2,3 \pmod 4$ we saw that in the given proof of the corollary. And for $d \equiv 1 \pmod 4$ this follows by the next easy lemma.

LEMMA 2.7. *Suppose* $d \equiv 1 \pmod 4$ *and define* $\delta = (d-1)/4$. *If for some nonzero* $k \in \mathbb{Z}$ *the Diophantine equation*

$$x^2 + mxy - \delta m^2 y^2 = k \tag{2.7}$$

has a solution in integers, then it has infinitely many solutions in integers.

PROOF. As we in fact already noted, the equation (2.7) can be written in an equivalent form as $N(x + my\omega) = k$. Suppose $(x_0, y_0) \in \mathbb{Z}^2$ is its solution. Also let $(u, v) \in \mathbb{Z}^2$ be any solution of the Pell equation $U^2 - dm^2V^2 = 1$; i.e., that $N(u + mv\sqrt{d}) = 1$. As the norm N is totally multiplicative, for

$$z = (x_0 + my_0\omega)(u + mv\sqrt{d})$$

we have that $N(z) = k$. It is straightforward to see that $z = \widetilde{x} + m\widetilde{y}\omega$, where

$$\widetilde{x} = x_0(u - mv) + 2\delta m^2 v y_0 \quad \text{and} \quad \widetilde{y} = y_0(u + mv) + 2x_0 v.$$

In other words, every $(\widetilde{x}, \widetilde{y}) \in \mathbb{Z}^2$ is a solution of (2.7). □

EXAMPLE 2.8. (I) Take $d = 2$ and consider $\mathbb{K} = \mathbb{Q}(\sqrt{2})$. By a little work one can check the following interesting fact. For every integer $2 \le m \le 100$ we can find a positive integer x such that $x^2 - 2m^2 = -p$ for some prime number $p \in \mathbb{N}$; i.e., we can always take $y = 1$ in order to represent $-p$ by the corresponding form q_m. This in particular gives a direct computational argument that every set of primes $\operatorname{Pr} R_m$, where R_m is as in (2.4), is infinite for $2 \le m \le 100$. More precisely, define $\mathcal{M}(x)$ as the set of all $m \in \{2, \dots, 100\}$ such that $x^2 - 2m^2 \in \operatorname{Pr}\mathbb{Z}$ and there is no positive integer $x_0 < x$ so that for $m \in \mathcal{M}(x)$ we also have $m \in \mathcal{M}(x_0)$. (That is, for $m \in \mathcal{M}(x)$ this x is "minimal possible".) Then we have $\mathcal{M}(23) = \{90\}$, $\mathcal{M}(19) = \{75, 93\}$, $\mathcal{M}(17) = \{30\}$, $\mathcal{M}(15) = \{71\}$, $\mathcal{M}(13) = \{55\}$, $\mathcal{M}(11) = \{96\}$, $\mathcal{M}(9) = \{65\}$ and also

$$\mathcal{M}(7) = \{19, 20, 51, 53, 60, 66, 74, 82, 83, 88, 94\},$$
$$\mathcal{M}(5) = \{9, 12, 26, 27, 29, 33, 48, 54, 57, 72, 77, 78, 84, 89, 97, 99\},$$
$$\mathcal{M}(3) = \{5, 14, 16, 23, 31, 32, 35, 37, 40, 44, 47, 58, 61, 67, 68, 70, 79, 86, 100\}.$$

The other 45 values of m belong to the set $\mathcal{M}(1)$.

(II) Now take $d = 5$ and consider $\mathbb{K} = \mathbb{Q}(\sqrt{5})$. Here we have $q_m(x, y) = x^2 + mxy - m^2y^2$ and therefore $q_m(x, 2) = (x + m)^2 - 5m^2$. We claim that for every integer $2 \le m \le 100$ we can find a positive integer x such that $x^2 - 5m^2 = -p$ for some prime number $p \in \mathbb{N}$. Note that for every m we can take $x \le 23$, where in particular for $m = 60$ we get $23^2 - 5 \cdot 60^2 = -17471$. We leave to the reader to compute the nonzero sets $\mathcal{M}(x)$, for $1 \le x \le 9$ and $x \in \{11, 13, 14, 16, 19\}$; where $\mathcal{M}(x)$ have the same meaning as in (I). In particular, we have that $\mathcal{M}(1)$ contains 28 values. As a conclusion, again we have a direct argument showing that every set of primes $\operatorname{Pr} R_m$, where R_m is as in (2.5), is infinite for $2 \le m \le 100$.

REMARK 2.9. For the above given two examples note the following. As one might expect the stated Question is closely related to the question of solvability of certain Diophantine equations. In particular for quadratic fields we had the question of representability of certain prime integers via particular quadratic forms in two variables. As one special case of that we can expect that for every square-free positive integer d the set $\Sigma_d = \{dm^2 - 1 | m \in \mathbb{N}\}$ will contain infinitely many prime integers. Of course we have no idea how to deal with this. But as one more heuristic fact for example note the following. Let $\mathcal{S}$ be the set of all numbers m satisfying both $200 \leq m \leq 300$ and $6m^2 - 1$ is a prime number. Clearly, for the 40 values of m satisfying $m \equiv 1, 4, 6, 9 \pmod{10}$, the number $6m^2 - 1$ is divisible by 5. For the remaining 61 values of m, 33 of them belong to the set $\mathcal{S}$. More precisely, we have

$$\begin{aligned}\mathcal{S} = \{&200, 207, 208, 210, 212, 220, 222, 223, 225, 227, 230, 235, 237, 238,\\ &240, 242, 247, 248, 257, 260, 263, 265, 267, 273, 277, 280, 283, 285,\\ &287, 288, 290, 292, 298\}.\end{aligned}$$

We conclude this section with one more result about real quadratic fields. First recall some well known facts; see, e.g., [4, Ch. VII, §§2 and 3]. The ring of integers $\mathcal{O}_{\mathbb{K}}$ of an algebraic number field $\mathbb{K}$ is a Dedekind domain. Further, a Dedekind domain is a UFD if and only if it is a PID. Consequently, we have the equivalences

$$h_{\mathbb{K}} = 1 \iff \mathcal{O}_{\mathbb{K}} \text{ is a UFD} \iff \mathcal{O}_{\mathbb{K}} \text{ is a PID},$$

where $h_{\mathbb{K}}$ is the class number of the algebraic number field $\mathbb{K}$; see, e.g., [1, Thm. 12.1.1]. Related to that a still unsolved problem asks whether we have infinitely many algebraic number fields $\mathbb{K}$ for which $\mathcal{O}_{\mathbb{K}}$ is a PID. Moreover a famous conjecture due to Gauss states that there are infinitely many real quadratic fields $\mathbb{K}$ so that the corresponding $\mathcal{O}_{\mathbb{K}}$ is a PID. At the same time we know that there are infinitely many real fields $\mathbb{K}$ so that its $\mathcal{O}_{\mathbb{K}}$ is not a PID. That is there are infinitely many real fields $\mathbb{K}$ for which the corresponding class number $h_{\mathbb{K}}$ is greater than 1. For example we know that $h_{\mathbb{K}}$ is even if the discriminant $d_{\mathbb{K}}$ of a real quadratic field $\mathbb{K}$ is divisible by three different primes; see, e.g., [7, Ch. V, Thm. 39, Cor. 1] and [3, Ch. 3, Sect. 8, Thm. 8] for more details. Further we know that given a positive integer e there are infinitely many real quadratic fields $\mathbb{K}$ such that e divides $h_{\mathbb{K}}$. The later result is due to Yamamoto [16] and Weinberger [15]. Here note that the corresponding numbers d, of the fields $\mathbb{K} = \mathbb{Q}(\sqrt{d})$ for which the above stated claims hold, will often be composite numbers with more than two prime divisors. So it might be of some interest to observe the following. Perhaps this is known, but we are not aware of any reference and so its proof is included.

PROPOSITION 2.10. *There are infinitely many positive square-free integers d such that the ring of integers $\mathcal{O}_{\mathbb{K}}$, of the quadratic field $\mathbb{K} = \mathbb{Q}(\sqrt{d})$, is not a*

PID. More precisely, take any prime number $p \in \mathbb{N}$ satisfying $p \equiv 5 \pmod 8$. Then we have infinitely many such positive square-free integers d satisfying both $d \equiv 1 \pmod 4$ and $p|d$. Also there are infinitely many positive square-free integers d satisfying both $d \equiv 3 \pmod 4$ and $p|d$.

In particular there are infinitely many positive integers d of the form $d = pq$, for some different primes $p, q \in \mathbb{N}$, so that the corresponding ring of integers $\mathcal{O}_{\mathbb{K}}$ is not a PID.

Keeping the above notation in force we first prove one auxiliary result about the norm map.

LEMMA 2.11. *Let $p \in \mathbb{N}$ be a prime number and d a square-free positive integer divisible by p. Then the following are equivalent.*

(a) There is no $w \in \mathcal{O}_{\mathbb{K}}$ satisfying any of the two congruences $N(w) \equiv \pm 2 \pmod p$.
(b) We have $p \equiv 5 \pmod 8$.

PROOF. First consider the case $d \equiv 2, 3 \pmod 4$. Then an element $w = x + y\sqrt{d} \in \mathcal{O}_{\mathbb{K}}$ satisfies $N(w) \equiv \pm 2 \pmod p$ if and only if $x^2 - dy^2 \equiv x^2 \equiv \pm 2 \pmod p$. Assume that (a) holds. Then each of the two congruences $x^2 \equiv \pm 2 \pmod p$ has no solutions, or equivalently for the corresponding Legendre symbols we have $\left(\frac{2}{p}\right) = \left(\frac{-2}{p}\right) = -1$. We have that the Legendre symbol $\left(\frac{2}{p}\right) = 1$ if and only if $p \equiv \pm 1 \pmod 8$; see, e.g., [6, Thm. 4.5]. Also we have $\left(\frac{-2}{p}\right) = \left(\frac{-1}{p}\right)\left(\frac{2}{p}\right)$ and $\left(\frac{-1}{p}\right) = (-1)^{\frac{p-1}{2}}$; see, e.g., [6, Prop. 4.3]. Thus if (a) holds we must have that either $p \equiv 3 \pmod 8$ or $p \equiv 5 \pmod 8$, and at the same time that $p \equiv 1 \pmod 4$. So we conclude that necessarily (b) holds. For the opposite implication note that (b) implies that $\left(\frac{2}{p}\right) = \left(\frac{-2}{p}\right) = -1$. Therefore, if (b) holds, then each of the two congruences $x^2 \equiv \pm 2 \pmod p$ has no solutions. Thus (a) holds.

Next assume that $d \equiv 1 \pmod 4$. Then an element $w = x + y\omega \in \mathcal{O}_{\mathbb{K}}$ would be a solution of one of the congruences $N(w) \equiv \pm 2 \pmod p$ if and only if we have

$$x^2 + xy + \frac{1-d}{4}y^2 \equiv \pm 2 \pmod p.$$

Hence it follows that for $t = 2x + y$ we have $t^2 - dy^2 \equiv \pm 8 \pmod p$. Here observe that the congruence $t^2 \equiv \varepsilon 8 \pmod p$ has a solution if and only if the congruence $t^2 \equiv \varepsilon 2 \pmod p$ has a solution, for $\varepsilon \in \{\pm 1\}$. This is a clear consequence of the fact that $\left(\frac{\varepsilon 8}{p}\right) = \left(\frac{\varepsilon 2}{p}\right)^3$. Therefore by what we have already shown it is immediate that the equivalence of (a) and (b) holds in this case as well. ∎

PROOF OF Proposition 2.10. First suppose that $d \equiv 1 \pmod 4$ and let then $\delta = (d-1)/4$ be as before. For $x + y\omega, a + b\omega \in \mathcal{O}_{\mathbb{K}}$ we have

$$(x + y\omega)(a + b\omega) = xa + yb\delta + (xb + ya + yb)\omega.$$

Let us try to find some convenient integers x, y, a, b and d so that $xb+ya+yb = 0$ and $xa + yb\delta$ is equal to some even positive integer 2ν. For example take $y = a = b = 1$, and then we have $x = -2$. Also take $d \equiv 1 \pmod 8$; i.e., write $d = 8\ell + 1$ for some positive integer ℓ. Now choose a (unique) number $m \in \{1, \dots, p-1\}$ so that $d = 8(pk + m) + 1$ is divisible by p, for any integer k. Clearly we have $m = (5p - 1)/8$ and then $d = p(8k + 5)$. Finally, by the classical Dirichlet's theorem on primes in arithmetic progressions, there are infinitely many natural numbers k so that d is square-free. It remains to observe the following two facts. First, by the previous lemma it is clear that 2 is an irreducible element. Second, note that by our choice we have that

$$(-2 + \omega)(1 + \omega) = 2\nu.$$

And hence it is immediate that 2 is not prime. Therefore $\mathcal{O}_{\mathbb{K}}$ is not a PID.

Now consider the case $d \equiv 2, 3 \pmod 4$. Similarly as above for the product of elements $x + y\sqrt{d}, a + b\sqrt{d} \in \mathcal{O}_{\mathbb{K}}$ we want both $xb + ya = 0$ and $xa + dby = 2\nu$ for some positive integer ν. Take again $y = a = b = 1$, where now $x = -1$. Thus we in particular obtain that $-1 + d = 2\nu$, and therefore we have to take $d \equiv 3 \pmod 4$. But if $d = 4\ell + 3$, then as above there is a unique $m \in \{1, \dots, p-1\}$ so that $d = 4(pk + m) + 3$ is divisible by p. This time we have $m = 3(p - 1)/4$ and then $d = p(4k + 3)$. Clearly for infinitely many values of k the natural number d will be square-free and again we will have that $2 \in \operatorname{Irr} \mathcal{O}_{\mathbb{K}}$ and $2 \notin \operatorname{Pr} \mathcal{O}_{\mathbb{K}}$. □

Remark 2.12. Suppose $p \in \mathbb{N}$ is a prime number satisfying $p \equiv 5 \pmod 8$. Then for $k \in \mathbb{N}$ define $d_p^1(k) = p(8k + 5)$ and $d_p^2(k) = p(4k + 3)$. By Proposition 2.10 and its proof we know that for $d = d_p^1(k)$ or $d_p^2(k)$ square-free the corresponding ring of integers $\mathcal{O}_{\mathbb{K}}$ is not a PID. Thus in particular for $1 < d < 1000$ square-free we obtain in total 104 values of d for which $\mathcal{O}_{\mathbb{K}}$ is not a PID. Further, there are 22 values of square-free $d \in \{2, \dots, 100\}$ such that the corresponding $\mathcal{O}_{\mathbb{K}}$ is not a PID. By our proposition we obtain 8 out of all these 22 values. These are: 15, 35, 39, 55, 65, 87, 91 and 95.

As the final remark here we note that one could adapt our approach via Proposition 2.10 and Lemma 2.11 so that some other square-free values of d could be ruled-out in the sense that the corresponding ring $\mathcal{O}_{\mathbb{K}}$ is not a PID.

3. On irreducible and prime polynomials

Given an integral domain A it is interesting to find out whether a particular polynomial $p = p(X)$ of the ring of polynomials $A[X]$, in one variable, is irreducible or not. If A is not a UFD, it would be often very helpful to see if p is moreover a prime element or not. The main purpose of this section is to present some basic results concerning the problems of polynomial reducibility for polynomials in two or more variables.

In order to better understand our setting, and the difference between the cases when A is a UFD and when it is not, it might be helpful to start with the following general observation. We omit its proof.

LEMMA 3.1. *Let A be a Noetherian integral domain. Then the following are equivalent.*

(a) The ring A is a UFD.
(b) For every positive integer n the ring of polynomials $A[X_1, \ldots, X_n]$ is a UFD.
(c) There is a positive integer n so that the ring of polynomials $A[X_1, \ldots, X_n]$ is a UFD.

Recall that given a polynomial $p \in \mathbb{Q}[X]$, in one variable, it is in general a difficult problem to find out whether p is reducible or not. Related to that we could first ask does the set $\operatorname{Irr} \mathbb{Q}[X] = \operatorname{Pr} \mathbb{Q}[X]$ have infinitely many elements. The following result, whose proof is an adaptation of the one proving that $\mathbb{N}$ has infinitely many primes, is certainly known. For the convenience of the reader we include its short proof.

PROPOSITION 3.2. *Let A be a Noetherian UFD. Then for every positive integer n the ring of polynomials $R = A[X_1, \ldots, X_n]$ has infinitely many irreducible (i.e., prime) polynomials.*

PROOF. As R is a Noetherian UFD as well, by Proposition 1.6 we in particular have that $\operatorname{Irr} R = \operatorname{Pr} R$. Now assume R has finitely many irreducible polynomials, say $f_1, \ldots, f_n$. Define a polynomial $F = f_1 \cdots f_n + 1_A$, where 1_A is the identity of A. Now a classical argument gives an irreducible polynomial $q \in R$ which divides F and which cannot be equal to any of f_i; a contradiction. □

To the end of this section we present some interesting facts and results about the reducibility of polynomials in two or more variables. We begin with two examples.

EXAMPLE 3.3. Let A be an integral domain.

(I) For any integer $n \geq 1$ consider the ring of polynomials $R = A[X_1, \ldots, X_n, Y]$, in variables $X_1, \ldots, X_n$ and Y. If we define $B = A[X_1, \ldots, X_n]$, then up to an isomorphism $R = B[Y]$. We claim the following:

For every $\varphi \in B$, the element $p = Y - \varphi(X_1, \ldots, X_n)$ is prime in R.

In order to show this assume $f, g \in R$ are nonzero polynomials such that $p | fg$. Consider f and g as elements of $B[Y]$ and then by the division algorithm we have some $q_1, q_2 \in R$ and $r_1, r_2 \in B$ such that $f = q_1 p + r_1$ and $g = q_2 p + r_2$. Now suppose r_1 and r_2 are nonzero polynomials. As clearly p divides $\rho = r_1 r_2 \in B$, there is some $h \in R$ such that

$$\rho(X_1, \ldots, X_n) = ph(X_1, \ldots, X_n, Y).$$

Then write $h \in B[Y]$ as $h = h_0 + h_1 Y + \cdots + h_m Y^m$, for some $h_i \in B$ where in particular $h_m \neq 0$. It follows that

$$\rho = (-\varphi h_0) + \cdots + h_m Y^{m+1},$$

which is impossible since $m+1 \geq 1$. Thus we conclude that necessarily $r_1 = 0$ or $r_2 = 0$; i.e., that $p|f$ or $p|g$.

As a special consequence of the above claim we have that each variable X_i of the polynomial ring $A[X_1, \ldots, X_n]$ is a prime element.

(II) Now define the ring of polynomials $R = A[X, Y]$, in variables X and Y. For arbitrary $a, b \in A$ define a polynomial

$$\varphi(X) = X^3 + aX + b.$$

We claim the following:

The element $p = Y^2 - \varphi(X)$ is prime in R.

(Note that, for "nice" A, the equality $p = 0$ becomes the "Weierstrass form of an elliptic curve". Also observe that the argument given in what follows remains valid for any $\varphi \in A[X]$ of odd degree; cf. Proposition 3.4 below.)

Our argument is similar to the one in (I). Namely assume $f, g \in R$ are nonzero polynomials such that $p|fg$. Then we can find some $q_1, q_2, r_1, r_2 \in R$ such that

$$f = q_1(Y^2 - \varphi) + r_1, \qquad g = q_2(Y^2 - \varphi) + r_2. \tag{3.1}$$

Here we can write $r_1 = s_0 + s_1 Y$ and $r_2 = t_0 + t_1 Y$, for some $s_i, t_i \in A[X]$. Again assume that $r_1, r_2 \neq 0$. As $p|r_1 r_2$ there is some $h \in R$ satisfying $r_1 r_2 = ph$; i.e., we have that

$$s_0 t_0 + (s_0 t_1 + s_1 t_0) Y + s_1 t_1 Y^2 = (Y^2 - \varphi) h.$$

Hence it is clear that necessarily $h = h_0 \in A[X]^\times$. And then we have equalities

$$s_1 t_1 = h_0, \quad s_0 t_1 + s_1 t_0 = 0, \quad s_0 t_0 = -\varphi h_0. \tag{3.2}$$

By multiplying the first equality by s_0 we get $s_1 s_0 t_1 = s_0 h_0$. By multiplying the second equality by s_1 we get $s_0 s_1 t_1 = -s_1^2 t_0$. Finally by multiplying the third equality by s_0 we get $s_0^2 t_0 = -\varphi h_0 s_0$. By the three newly obtained equalities it is immediate that $s_0^2 t_0 = \varphi s_1^2 t_0$. Observe that necessarily $t_0 \neq 0$, and therefore $s_0^2 = \varphi s_1^2$. But as the degrees of s_0^2 and s_1^2 are even, while the degree of φ is odd, this is impossible.

It is worth to note that the claim in (II) od the previous Example can be in part further generalized so that we can have the polynomial $\varphi(X)$ there to be of even degree. Namely we have the following proposition. Its part (ii) shows one more time, on a rather special example, that proving for a particular element to be prime could be a quite demanding task.

PROPOSITION 3.4. *Let A be an integral domain and $\varphi(X) \in A[X]$ a polynomial. Define $p = Y^2 - \varphi(X)$, a polynomial in $R = A[X, Y]$.*

(i) The polynomial p is irreducible in R if and only if there is no polynomial $\omega(X) \in A[X]$ such that $\omega^2(X) = \varphi(X)$.

(ii) Suppose the characteristic $\operatorname{char} A \neq 2$ *and let then $\varphi(X) = X^4 + aX + b$, where $a, b \in A$ are not both equal to zero. Then p is an irreducible element of R. Furthermore suppose* $\operatorname{char} A \neq 2, 3$ *and $a, b \in A$ are such that $256b^3 \neq 27a^4$. Then p is a prime element of R.*

PROOF. (i) Suppose p is reducible; i.e., there are polynomials $g, h \in R \backslash A^*$ such that $p = gh$. By considering g and h as polynomials in the variable Y, with coefficients from $A[X]$, we have two possibilities. First assume that

$$g = a_0(X) \quad \text{and} \quad h = b_2(X)Y^2 + b_1(X)Y + b_0(X),$$

for some $a_0, b_j \in A[X]$. Then we in particular have that $a_0(X)b_2(X) = 1$, which gives that $g \in A^*$; a contradiction. The second possibility is that

$$g = a_1(X)Y + a_0(X) \quad \text{and} \quad h = b_1(X)Y + b_0(X),$$

for some $a_j, b_j \in A[X]$. Now we have $a_1(X)b_1(X) = 1$, which means that $a_1(X), b_1(X) \in A^*$. With no loss of generality we can take $a_1(X) = b_1(X) = 1$; and so $g = Y + a_0(X)$ and $h = Y + b_0(X)$. But then it is immediate that

$$a_0(X) + b_0(X) = 0 \quad \text{and} \quad a_0(X)b_0(X) = -\varphi(X).$$

Hence by putting $\omega(X) = a_0(X) = -b_0(X)$ we have that $\omega^2(X) = \varphi(X)$; or in other words we have a factorization $p = (Y - \omega(X))(Y + \omega(X))$. This finishes our proof of the implication from right to left, while the opposite one is clear.

(ii) By (i) we just have to show that there is no $\omega \in A[X]$ such that $\omega^2(X) = \varphi(X)$. So assume to the contrary, that there is some such ω and then write it as $\omega(X) = X^2 + uX + v$, with $u, v \in A$. Then it would easily follow that we have

$$2u = 0 = u^2 + 2v, \qquad 2uv = a, \qquad v^2 = b;$$

which is impossible since $\operatorname{char} A \neq 2$ and a, b are not both equal to zero.

For the second claim we proceed as in (II) of Example 3.3. That is suppose $p | fg$ and write $f, g \in A[X]$ as in (3.1). For $s_0, s_1 \in A[X]$ as there we have again the equality

$$s_0^2 = \varphi s_1^2, \tag{3.3}$$

where both s_0 and s_1 are nonzero polynomials. Our goal is to prove that in fact such s_0 and s_1 do not exist. Namely suppose to the contrary and let s_0, s_1 be chosen so that the degree of s_0 is the minimal possible. Then by the division algorithm one more time we can write

$$s_0 = Q_0\varphi + R_0 \quad \text{and} \quad s_1 = Q_1\varphi + R_1, \tag{3.4}$$

where $Q_i, R_i \in A[X]$ and $\deg R_i < 4$ for $i = 1, 2$. Clearly $R_0 \neq 0$, as otherwise it would follow that $s_1^2 = \varphi Q_0^2$, which contradicts to the stated minimality condition. Also if we rewrite (3.3) using (3.4) it is immediate that $\varphi | R_0^2$. Let us show that this is impossible. For that purpose define $\mathbb{K}$ to be the quotient field of A and $\overline{\mathbb{K}}$ be its algebraic closure. Also suppose there is some $\vartheta \in A[X]$ such that $R_0^2 = \varphi\vartheta$. Of course the last equality can be considered as an equality of polynomials in $\overline{\mathbb{K}}[X]$. Observe that R_0^2 has at most three mutually different roots in $\overline{\mathbb{K}}$. We want to show that φ has four mutually different roots in $\overline{\mathbb{K}}$, which will suffice for our argument. For that purpose assume $x_0 \in \overline{\mathbb{K}}$ is a multiple root of φ. Then x_0 is a root of the derivative φ' as well. As we have that $\varphi(x_0) = x_0\varphi'(x_0)$ is equivalent to $x_0^4 = b/3$, it follows at once that $ax_0 = -4b/3$. If $a = 0$, then it is clear that φ cannot have a multiple root. And if $a \neq 0$, we have that $x_0 = -4b/(3a)$. Hence we deduce that

$$0 = \varphi(x_0) = \Big(-\frac{4b}{3a}\Big)^4 + a\Big(-\frac{4b}{3a}\Big) + b,$$

which is equivalent to the equality $256b^3 = 27a^4$; a contradiction. □

Remark 3.5. Note that for our polynomials φ and p in the second claim of (ii) in the previous proposition we have that $p = 0$ can be considered as a hyperelliptic curve over $\mathbb{K}$, which is in fact an elliptic curve (as all the roots of φ in $\overline{\mathbb{K}}$ are simple). Here also note that $256b^3 - 27a^4$ is the discriminant of the polynomial φ.

We conclude the paper with two more examples, where we treat the question of reducibility for some specific polynomials with some "ad hoc methods". For the first one we need the following easy lemma.

Lemma 3.6. *Let B be an integral domain with identity 1_B such that the element $2_B = 1_B + 1_B$ is invertible. Let $f \in B[T]$ be a quadratic polynomial of the form $f(T) = T^2 + \alpha T + \beta$. Then f is reducible if and only if the element $(2_B^{-1}\alpha)^2 - \beta$ is a square in B.*

Proof. Our argument is similar to the one for (i) of the last proposition. Namely suppose f is reducible and $g, h \in B[T] \setminus B^*$ are such that $f = gh$. We can assume that $g = a_1T + a_0$ and $h = b_1T + b_0$, for some $a_i, b_i \in B$. In fact we can take $a_1 = b_1 = 1_B$. Hence it is immediate that $a_0^2 - \alpha a_0 + \beta = 0$, which can be written in an equivalent form as

$$(a_0 - 2_B^{-1}\alpha)^2 = (2_B^{-1}\alpha)^2 - \beta.$$

Now if $\omega \in B$ is such that ω^2 is equal to the right-hand side of the above equality, then $a_0 \in \{2_B^{-1}\alpha \pm \omega\}$ and $b_0 = \alpha - a_0$. And therefore f is reducible. Clearly we have the opposite implication as well; i.e., if f is reducible, then $(2_B^{-1}\alpha)^2 - \beta$ must be a square in B. □

EXAMPLE 3.7. (I) Suppose A is an integral domain with identity 1_A such that the element $2_A = 1_A + 1_A$ is invertible. Let also g and h be polynomials from the ring $B = A[X, Y]$ such that the total degree $\deg h$ is odd and greater than $2 \deg g$. Then the polynomial

$$f = Z^2 + g(X, Y)Z + h(X, Y)$$

is irreducible in $R = A[X, Y, Z]$. In order to see that put $\alpha = g$ and $\beta = h$ and then define a polynomial

$$\varphi = (2_A^{-1}\alpha)^2 - \beta.$$

As the degree $\deg \varphi = \deg h$ is odd, it is clear that φ is not a square in the ring B. By the previous lemma we know that then f is an irreducible element in R.

(II) Suppose A is an integral domain and φ is a polynomial from the ring $B = A[X, Y]$ whose total degree is not divisible by 3. Then we claim that the polynomial

$$f = Z^3 + \varphi(X, Y)$$

is irreducible in $R = A[X, Y, Z]$. For that purpose suppose to the contrary, that f is reducible. Then we would have some $a_i, b_j \in B$ so that for the polynomials

$$g = a_2(X, Y)Z^2 + a_1(X, Y)Z + a_0(X, Y) \quad \text{and} \quad h = b_1(X, Y)Z + b_0(X, Y)$$

we have $f = gh$. With no loss of generality we can take that $a_2 = b_1 = 1$. Then we get at once that necessarily

$$a_0 + b_0 a_1 = 0 = a_1 + b_0 \quad \text{and} \quad a_0 b_0 = \varphi.$$

Hence we obtain that $a_1 = -b_0$, further $a_0 = b_0^2$ and finally $b_0^3 = \varphi$. But the last equality gives in particular that $\deg \varphi = 3 \deg b_0$, which is impossible.

REMARK 3.8. As the final remark we would like to say that the last two examples above are just special cases of a more general and powerful technique which enables to treat reducibility questions of polynomials from the polynomial ring $A[X]$, where A belongs to a rather wide class of integral domains. The details will appear in [14].

ACKNOWLEDGEMENTS.

The author is grateful to his friend and colleague Andrej Dujella for his help during the preparation of this paper. His expert insight and numerous hints, that significantly improved the first version of the paper, were so valuable that cannot be overestimated. The author is also indebted to the referee for the numerous remarks and/or suggestions that improved and clarified the presentation.

This work was supported in part by the QuantiXLie Centre of Excellence, a project co-financed by the Croatian Government and European Union

through the European Regional Development Fund - the Competitiveness and Cohesion Operational Programme (Grant KK.01.1.1.01.0004).

References

[1] S. Alaca and K. S. Williams, Introductory Algebraic Number Theory, Cambridge Univ. Press, Cambridge, 2004.
[2] P. Bachmann, Die Analytische Zahlentheorie, Teubner, Leipzig, 1894.
[3] Z. I. Borevich and I. R. Shafarevich, Number theory, Academic Press, New York, 1966.
[4] N. Bourbaki, Commutative algebra, Chapters 1–7, Springer-Verlag, New York, 1985.
[5] L. E. Dickson, History of the Theory of Numbers, Volume 2: Diophantine analysis, Chelsea, New York, 1966.
[6] A. Dujella, Number theory, Školska knjiga, Zagreb, 2021.
[7] A. Fröhlich and M. J. Taylor, Algebraic number theory, Cambridge Stud. Adv. Math. **27**, Cambridge Univ. Press, Cambridge, 1994.
[8] T. W. Hungerford, Algebra, Grad. Texts in Math., Vol. **73**, Springer, New York, 1974.
[9] S. Lang, Algebra, Third Ed., Addison Wesley, Reading, 1994.
[10] S. MacLane, *The Schönemann-Eisenstein irreducibility criteria in terms of prime ideals*, Trans. Amer. Math. Soc. **43** (1938), 226–239.
[11] J. Neukirch, Algebraic Number Theory, Springer, Berlin, 1999.
[12] I. Niven, H. S. Zuckerman and H. L. Montgomery, An introduction to the theory of numbers, Wiley, New York, 1991.
[13] J. J. Rotman, Advanced modern algebra, Second Ed., Grad. Stud. Math., Vol. **114**, Amer. Math. Soc., Providence, 2010.
[14] B. Širola, *A generalization of Dumas-Eisenstein criterion,* in preparation.
[15] P. J. Weinberger, *Real quadratic fields with class numbers divisible by n*, J. Number Theory **5** (1973), 237–241.
[16] Y. Yamamoto, *On unramified Galois extensions of quadratic number fields*, Osaka J. Math. **7** (1970), 57–76.

Prosti elementi u komutativnim domenama

Boris Širola

Sažetak. U radu su prikazani neki rezultati o prostim elementima u integralnim domenama. Posebno se bavimo sljedećim pitanjem: Ima li svaki poredak u polju algebarskih brojeva beskonačno mnogo prostih elemenata? I onda pokazujemo da je za slučaj realnih kvadratnih polja odgovor na to pitanje potvrdan. Nadalje, dajemo neke parcijalne rezultate i primjere o prostim polinomima u dvije ili više varijabli s koeficijentima iz proizvoljne integralne domene.

Department of Mathematics
University of Zagreb
10 000 Zagreb, Croatia
E-mail: sirola@math.hr

Received: 10.7.2023.
Revised: 25.10.2023.
Accepted: 14.11.2023.

RAD HAZU. MATEMATIČKE ZNANOSTI
Vol. 28 = 558 (2024): 245-258
DOI: https://doi.org/10.21857/y26kecg7e9

WEIRD K-ACTIONS ON $\mathcal{U}(\mathfrak{g})$ FOR $\mathfrak{so}(n,1)$ AND $\mathfrak{su}(n,1)$

Hrvoje Kraljević

For Marko Tadić, with our admiration and appreciation

Abstract. Let $\mathfrak{g}_0$ be either $\mathfrak{so}(n,1)$ or $\mathfrak{su}(n,1)$, $\mathfrak{g}$ its complexification, K a maximal compact subgroup of the adjoint group of $\mathfrak{g}_0$, $\mathcal{U}(\mathfrak{g})$ the universal enveloping algebra of $\mathfrak{g}$ and $\mathcal{U}(\mathfrak{g})^K$ its subalgebra of K-invariants. A consequence of our results in [2] is that besides the usual adjoint action of K on $\mathcal{U}(\mathfrak{g})$ there is another action of K commuting with the adjoint action and leaving $\mathcal{U}(\mathfrak{g})^K$ pointwise invariant. The case $\mathfrak{g}_0 = \mathfrak{so}(2,1) \simeq \mathfrak{su}(1,1)$ is trivial since K is commutative and the weird action of K coincides with the inverse of adjoint action. We investigate closely the weird action of K in the simplest nontrivial case $\mathfrak{g}_0 = \mathfrak{so}(3,1)$.

1. Notation

Our notation is usual: $\mathbb{C}$ are complex numbers, $\mathbb{R}$ real numbers, $\mathbb{Z}$ integers, $\mathbb{Z}_+$ nonnegative integers, $\mathbb{N} = \mathbb{Z}_+ \setminus \{0\}$, $M_{n,m}(K)$ the space of $n \times m$ matrices with entries from a field K, $M_n(K) = M_{n,n}(K)$, $A_{j,k}$ is the (j,k)-entry of a matrix A, I_n is the unit $n \times n$ matrix, A^t denotes the transpose of a matrix A, A^* is the adjoint (= transpose and complex conjugate) of a matrix $A \in M_n(\mathbb{C})$. Furthermore, $\mathfrak{gl}(n,K)$ is the Lie algebra $M_n(K)$ with commutator $[A,B] = AB - BA$, $\mathfrak{sl}(n,K) = \{A \in \mathfrak{gl}(n,K);\, \operatorname{Tr} A = 0\}$, $\mathfrak{so}(n,1) = \{A \in M_{n+1}(\mathbb{R});\, A^t = -\Gamma A \Gamma\}$ with $\Gamma = \operatorname{diag}(1,\dots,1,-1)$, $\mathfrak{so}(n) = \{B \in M_n(\mathbb{R});\, B^t = -B\}$, $\mathfrak{su}(n,1) = \{A \in \mathfrak{sl}(n+1,\mathbb{C});\, A^* = -\Gamma A \Gamma\}$, and $\mathfrak{u}(n) = \{B \in M_n(\mathbb{C});\, B^* = -B\}$; the complexifications of the real Lie algebras $\mathfrak{so}(n,1)$, $\mathfrak{so}(n)$, $\mathfrak{su}(n,1)$ and $\mathfrak{u}(n)$ are $\mathfrak{so}(n,1,\mathbb{C}) = \{A \in M_{n+1}(\mathbb{C});\, A^t = -\Gamma A \Gamma\}$, $\mathfrak{so}(n,\mathbb{C}) = \{B \in M_n(\mathbb{C});\, B^t = -B\}$, $\mathfrak{sl}(n+1,\mathbb{C})$ and $\mathfrak{gl}(n,\mathbb{C})$. Furthermore, $\mathrm{GL}(n,K)$ denotes the group of invertible matrices in $M_n(K)$ and $\mathrm{SL}(n,K) = \{A \in \mathrm{GL}(n,K); \det A = 1\}$. The matrix Lie groups of the introduced real Lie algebras are $\mathrm{SO}(n,1) = \{A \in \mathrm{SL}(n+1,\mathbb{R});\, A^t \Gamma A = \Gamma\}$ with the identity component $\mathrm{SO}_e(n,1) = \{A \in \mathrm{SO}(n,1);\, A_{n+1,n+1} \geq 1\}$, $\mathrm{SO}(n) =$

2020 *Mathematics Subject Classification.* 16S30, 20G05.
Key words and phrases. Universal enveloping algebra, K-types, adjoint action, K-invariants, K-harmonic polynomials.

$\{A \in \mathrm{SL}(n,\mathbb{R});\ A^tA = I_n\}$, $\mathrm{SU}(n,1) = \{A \in \mathrm{SL}(n+1,\mathbb{C});\ A^*\Gamma A = \Gamma\}$ and $\mathrm{U}(n) = \{A \in \mathrm{GL}(n,\mathbb{C});\ A^*A = I_n\}$. We have

$$\mathfrak{so}(n,1) = \left\{ \begin{bmatrix} B & a \\ a^t & 0 \end{bmatrix};\ B \in \mathfrak{so}(n),\ a \in M_{n,1}(\mathbb{R}) \right\},$$

and

$$\mathfrak{su}(n,1) = \left\{ \begin{bmatrix} B & a \\ a^* & -\operatorname{Tr} B \end{bmatrix};\ B \in \mathfrak{u}(n),\ a \in M_{n,1}(\mathbb{C}) \right\}.$$

2. Preliminaries

Let $\mathfrak{g}_0$ be either $\mathfrak{so}(n,1)$ $(n \geq 2)$ or $\mathfrak{su}(n,1)$, $\mathfrak{g}$ its complexification, G the adjoint group of $\mathfrak{g}_0$, K its maximal compact subgroup, $\mathfrak{g}_0 = \mathfrak{k}_0 \oplus \mathfrak{p}_0$ the corresponding Cartan decomposition and $\mathfrak{g} = \mathfrak{k} \oplus \mathfrak{p}$ its complexification.

In the case $\mathfrak{g}_0 = \mathfrak{so}(n,1)$ the adjoint group G can be identified with the group $\mathrm{SO}_e(n,1)$ and the adjoint action of $A \in \mathrm{SO}_e(n,1)$ on $\mathfrak{g}$ is given by $A.X = (\operatorname{Ad} A)X = AXA^{-1}$, $X \in \mathfrak{g}$. In this case we choose the maximal compact subgroup $K = \left\{ \begin{bmatrix} B & 0 \\ 0 & 1 \end{bmatrix};\ B \in \mathrm{SO}(n) \right\} \simeq \mathrm{SO}(n)$. Then

$$\mathfrak{k}_0 = \left\{ \begin{bmatrix} B & 0 \\ 0 & 0 \end{bmatrix} \in M_{n+1}(\mathbb{R});\ B \in \mathfrak{so}(n) \right\} \simeq \mathfrak{so}(n),$$

$$\mathfrak{p}_0 = \left\{ \begin{bmatrix} 0 & a \\ a^t & 0 \end{bmatrix};\ a \in M_{n,1}(\mathbb{R}) \right\},$$

and

$$\mathfrak{k} = \left\{ \begin{bmatrix} B & 0 \\ 0 & 0 \end{bmatrix} \in M_{n+1}(\mathbb{C});\ B \in \mathfrak{so}(n,\mathbb{C}) \right\} \simeq \mathfrak{so}(n,\mathbb{C}),$$

$$\mathfrak{p} = \left\{ \begin{bmatrix} 0 & a \\ a^t & 0 \end{bmatrix};\ a \in M_{n,1}(\mathbb{C}) \right\}.$$

In the case $\mathfrak{g}_0 = \mathfrak{su}(n,1)$ we have $\mathfrak{g} = \mathfrak{sl}(n+1,\mathbb{C})$. We choose the Cartan decomposition of $\mathfrak{g}_0$

$$\mathfrak{k}_0 = \left\{ \begin{bmatrix} B & 0 \\ 0 & -\operatorname{Tr} B \end{bmatrix} \in M_{n+1}(\mathbb{C});\ B \in \mathfrak{u}(n) \right\} \simeq \mathfrak{u}(n),$$

and

$$\mathfrak{p}_0 = \left\{ \begin{bmatrix} 0 & a \\ a^* & 0 \end{bmatrix};\ a \in M_{n,1}(\mathbb{C}) \right\}.$$

Then

$$\mathfrak{k} = \left\{ \begin{bmatrix} B & 0 \\ 0 & -\operatorname{Tr} B \end{bmatrix} \in M_{n+1}(\mathbb{C});\ B \in M_n(\mathbb{C}) \right\} \simeq \mathfrak{gl}(n,\mathbb{C}),$$

and

$$\mathfrak{p} = \left\{ \begin{bmatrix} 0 & a \\ b & 0 \end{bmatrix};\ a \in M_{n,1}(\mathbb{C}),\ b \in M_{1,n}(\mathbb{C}) \right\}.$$

Now G is identified with $\mathrm{SU}(n,1)/Z$, where Z is the center of $\mathrm{SU}(n,1)$:

$$Z = \{\alpha I_{n+1};\ \alpha \in \mathbb{C},\ \alpha^{n+1} = 1\} \simeq \mathbb{Z}_{n+1} := \mathbb{Z}/(n+1)\mathbb{Z}.$$

Then $K = \tilde{K}/Z$, where $\tilde{K}$ is a maximal compact subgroup of $\mathrm{SU}(n,1)$

$$\tilde{K} = \left\{ \begin{bmatrix} B & 0 \\ 0 & (\det B)^{-1} \end{bmatrix};\ B \in \mathrm{U}(n) \right\} \simeq \mathrm{U}(n).$$

Denote by $\mathcal{U}(\mathfrak{g})$ and $\mathcal{U}(\mathfrak{k}) \subseteq \mathcal{U}(\mathfrak{g})$ the universal enveloping algebras of $\mathfrak{g}$ and $\mathfrak{k}$. Furthermore, let $S(\mathfrak{g})$ and $S(\mathfrak{k}) \subseteq S(\mathfrak{g})$ be the symmetric algebras over $\mathfrak{g}$ and $\mathfrak{k}$; using the invariant non-degenerate trace bilinear form $(A,B) \mapsto \mathrm{Tr}\, AB$ one identifies $\mathfrak{g}$ and $\mathfrak{k}$ with its dual spaces $\mathfrak{g}^*$ and $\mathfrak{k}^*$, thus the symmetric algebras $S(\mathfrak{g})$ and $S(\mathfrak{k})$ with the polynomial algebras $\mathcal{P}(\mathfrak{g}) = S(\mathfrak{g}^*)$ and $\mathcal{P}(\mathfrak{k}) = S(\mathfrak{k}^*)$. The group G (and its subgroup K) acts by automorphisms on the algebras $\mathcal{U}(\mathfrak{g})$ and $\mathcal{P}(\mathfrak{g})$ and K acts by automorphisms on $\mathcal{U}(\mathfrak{k})$ and $\mathcal{P}(\mathfrak{k})$. Denote by $\mathcal{U}(\mathfrak{g})^G$, $\mathcal{P}(\mathfrak{g})^G$, $\mathcal{U}(\mathfrak{g})^K$, $\mathcal{P}(\mathfrak{g})^K$, $\mathcal{U}(\mathfrak{k})^K$ and $\mathcal{P}(\mathfrak{k})^K$ the subalgebras of invariants. Then $\mathcal{U}(\mathfrak{g})^G$ is the center $\mathcal{Z}(\mathfrak{g})$ of $\mathcal{U}(\mathfrak{g})$ and $\mathcal{U}(\mathfrak{k})^K$ is the center $\mathcal{Z}(\mathfrak{k})$ of $\mathcal{U}(\mathfrak{k})$. Knop has proved in [1] the following theorem.

THEOREM 2.1. *The multiplication induces an isomorphism of $\mathcal{Z}(\mathfrak{g}) \otimes \mathcal{Z}(\mathfrak{k})$ onto the algebra $\mathcal{U}(\mathfrak{g})^K$ and an isomorphism of $\mathcal{P}(\mathfrak{g})^G \otimes \mathcal{P}(\mathfrak{k})^K$ onto $\mathcal{P}(\mathfrak{g})^K$.*

Denote by $\mathcal{N}_K$ the set of all nilpotent elements of $\mathfrak{g}$ whose projection onto $\mathfrak{k}$ along $\mathfrak{p}$ is nilpotent in the reductive Lie algebra $\mathfrak{k}$, and let $\mathcal{H}$ be the subspace of $\mathcal{U}(\mathfrak{g})$ spanned by all powers (in $\mathcal{U}(\mathfrak{g})$) A^k, $A \in \mathcal{N}_K$, $k \in \mathbb{Z}_+$. The subspace $\mathcal{H}$ of $\mathcal{U}(\mathfrak{g})$ is invariant under the action of K. We have proved in [2] the following theorem.

THEOREM 2.2. *Under above assumptions*

(i) *The multiplication induces an isomorphism of $(\mathcal{U}(\mathfrak{g})^K, K)$-modules $\mathcal{U}(\mathfrak{g})^K \otimes \mathcal{H}$ onto $\mathcal{U}(\mathfrak{g})$.*

(ii) *Let $\hat{K}$ be the set of equivalence classes of irreducible (finite-dimensional) representations of K. The multiplicity of any $\delta \in \hat{K}$ in the K-module $\mathcal{H}$ is equal to its degree $d(\delta)$.*

3. WEIRD ACTION OF K ON $\mathcal{U}(\mathfrak{g})$

We recall briefly the proof of (*ii*) which leads to a weird action of K on $\mathcal{U}(\mathfrak{g})$. The inverse of the symmetrization $\mathcal{U}(\mathfrak{g}) \to S(\mathfrak{g}) = \mathcal{P}(\mathfrak{g})$ maps the K-submodule $\mathcal{H}$ onto the space $\mathcal{H}_K(\mathfrak{g})$ of K-harmonic polynomials on $\mathfrak{g}$:

$$\mathcal{H}_K(\mathfrak{g}) = \{f \in \mathcal{P}(\mathfrak{g});\ \partial(u)f = 0\ \forall u \in S_+(\mathfrak{g})^K\}.$$

Here $\partial : S(\mathfrak{g}) \to \mathcal{D}(\mathfrak{g})$ is the usual isomorphism of the symmetric algebra $S(\mathfrak{g})$ onto the algebra $\mathcal{D}(\mathfrak{g})$ of linear differential operators on $\mathcal{P}(\mathfrak{g})$ with constant

coefficients: $\partial(X)$ is the derivation in the direction X for any $X \in \mathfrak{g}$. Furthermore, we denote by $S_+(\mathfrak{g})^K$ and $\mathcal{P}_+(\mathfrak{g})^K$ the maximal ideals (of codimension 1) of the algebras of K-invariants $S(\mathfrak{g})^K$ and $\mathcal{P}(\mathfrak{g})^K$:

$$S_+(\mathfrak{g})^K = \bigoplus_{k>0} S^k(\mathfrak{g})^K, \qquad \mathcal{P}_+(\mathfrak{g})^K = \bigoplus_{k>0} \mathcal{P}^k(\mathfrak{g})^K = \{P \in \mathcal{P}(\mathfrak{g})^k;\ P(0) = 0\}.$$

Then the set $\mathcal{N}_K$ of K-nilpotent elements of $\mathfrak{g}$ is the zero set of the ideal $\mathcal{P}(\mathfrak{g})\mathcal{P}_+(\mathfrak{g})^K$ generated by $\mathcal{P}_+(\mathfrak{g})^K$ in $\mathcal{P}(\mathfrak{g})$, i.e.

$$\mathcal{N}_K = \{X \in \mathfrak{g};\ P(X) = 0\ \forall P \in \mathcal{P}_+(\mathfrak{g})^K\}.$$

Now, by the Knop's theorem $\mathcal{P}(\mathfrak{g})^K \simeq \mathcal{P}(\mathfrak{g})^G \otimes \mathcal{P}(\mathfrak{k})^K$. By Harish-Chandra isomorphism and by Chevalley's theorem on Weyl group invariants we know that the algebra $\mathcal{P}(\mathfrak{g})^G$ is generated by $\ell = \operatorname{rank}\mathfrak{g}$ homogeneous algebraically independent G-invariant polynomials $f_1, \dots, f_\ell$ and the algebra $\mathcal{P}(\mathfrak{k})^K$ is generated by $k = \operatorname{rank}\mathfrak{k}$ homogeneous algebraically independent K-invariant polynomials $\varphi_1, \dots, \varphi_k$. Thus, $\mathcal{P}(\mathfrak{g})^K$ is generated by $\ell + k$ homogeneous algebraically independent polynomials $f_1, \dots, f_\ell, \varphi_1, \dots, \varphi_k$ and so

$$\mathcal{N}_K = \{X \in \mathfrak{g};\ f_1(X) = \dots = f_\ell(X) = \varphi_1(X) = \dots = \varphi_k(X) = 0\}$$

is a Zariski closed subset of $\mathfrak{g}$ of dimension $\dim\mathfrak{g} - \ell - k$. More generally, for any $(\xi, \eta) = (\xi_1, \dots, \xi_\ell, \eta_1, \dots, \eta_k)$ in $\mathbb{C}^{\ell+k}$ we define a $K^{\mathbb{C}}$-stable Zariski closed set of the same dimension ($K^{\mathbb{C}}$ being the complexification of the group K)

$$\mathcal{N}_K(\xi, \eta) = \{X \in \mathfrak{g};\ f_j(X) = \xi_j,\ j = 1, \dots, \ell,\ \varphi_i(X) = \eta_i,\ i = 1, \dots, k\}.$$

For the Lie algebras $\mathfrak{so}(n, 1)$ and $\mathfrak{su}(n, 1)$ one finds that $\dim \mathcal{N}_K(\xi, \eta) = \dim K^{\mathbb{C}}$. We saw in [2] that for every $(\xi, \eta) \in \mathbb{C}^{\ell+k}$ the restriction of polynomials to $\mathcal{N}_K(\xi, \eta)$ induces an isomorphism of K-modules

$$\mathcal{H}_K(\mathfrak{g}) \approx \mathcal{P}(\mathcal{N}_K(\xi, \eta)) = \mathcal{R}(\mathcal{N}_K(\xi, \eta)).$$

Here $\mathcal{P}(S) = \{f|S;\ f \in \mathcal{P}(\mathfrak{g})\}$ for any subset $S \subseteq \mathfrak{g}$ and $\mathcal{R}(T)$ denotes the algebra of regular functions on an algebraic variety T. In [2] we have proved that there exists $X_0 \in \mathfrak{g}_0$ such that its stabilizer $K^{\mathbb{C}}_{X_0}$ in $K^{\mathbb{C}}$ is trivial. Then the dimension of the $K^{\mathbb{C}}$-orbit $\mathcal{O}_{X_0} = K^{\mathbb{C}}.X_0$ equals $\dim K^{\mathbb{C}}$. For $(\xi, \eta) = (f_1(X_0), \dots, f_\ell(X_0), \varphi_1(X_0), \dots, \varphi_k(X_0))$ we have $\mathcal{O}_{X_0} \subseteq \mathcal{N}_K(\xi, \eta)$ and the equality of dimensions implies that $\mathcal{O}_{X_0}$ is Zariski open in $\mathcal{N}_K(\xi, \eta)$, Thus the restriction to $\mathcal{O}_{X_0}$ is an isomorphism of $\mathcal{P}(\mathcal{N}_K(\xi, \eta)) = \mathcal{R}(\mathcal{N}_K(\xi, \eta))$ onto $\mathcal{P}(\mathcal{O}_{X_0})$. Using Peter-Weyl and Stone-Weierstrass theorems we have proved in [2] that in fact $\mathcal{P}(\mathcal{O}_{X_0}) = \mathcal{R}(\mathcal{O}_{X_0}) \approx \mathcal{R}(K^{\mathbb{C}})$.

Thus, as a K-module, $\mathcal{H} \approx \mathcal{H}_K(\mathfrak{g})$ is isomorphic to the left regular representation of K on $\mathcal{R}(K^{\mathbb{C}})$. Now $\mathcal{R}(K^{\mathbb{C}})$ carries also the right regular representation of K commuting with the left one. By the isomorphism $\mathcal{R}(K^{\mathbb{C}}) \approx \mathcal{H}$ we transfer this action of K to $\mathcal{H}$ and expand it to $\mathcal{U}(\mathfrak{g}) = \mathcal{U}(\mathfrak{g})^K \otimes \mathcal{H}$ by leaving $\mathcal{U}(\mathfrak{g})^K$ pointwise invariant. The obtained representation of K on $\mathcal{U}(\mathfrak{g})$

we call **weird action** of K on $\mathcal{U}(\mathfrak{g})$. In the simplest case $\mathfrak{so}(2,1) \approx \mathfrak{su}(1,1)$ the compact group K is commutative and thus the weird action coincides with the adjoint action composed with the inverse map $x \mapsto x^{-1}$ in K.

In the cases $\mathfrak{so}(n,1)$, $n \geq 3$, and $\mathfrak{su}(n,1)$, $n \geq 2$, when K is not commutative, the weird action is not unique: it depends on the choice of $X_0 \in \mathfrak{g}_0$ such that its stabilizer $K^{\mathbb{C}}_{X_0}$ in $K^{\mathbb{C}}$ is trivial. Furthermore, in general the operators of the weird action are not automorphims of the algebra $\mathcal{U}(\mathfrak{g})$. One gets automorphisms if the weird action is trivially extended to the localization $\mathcal{U}(\mathfrak{g})_{\mathcal{U}(\mathfrak{g})^K \setminus \{0\}}$ and if we consider this localization as an algebra over the field of fractions $\mathcal{U}(\mathfrak{g})^K_{\mathcal{U}(\mathfrak{g})^K \setminus \{0\}}$ of the integral domain $\mathcal{U}(\mathfrak{g})^K$.

4. Weird action for $\mathfrak{g}_0 = \mathfrak{so}(3,1)$

We will compute the weird action in the simplest nontrivial case $\mathfrak{g}_0 = \mathfrak{so}(3,1)$. Computation will be on $\mathcal{P}(\mathfrak{g})$ instead of $\mathcal{U}(\mathfrak{g})$; one passes to $\mathcal{U}(\mathfrak{g})$ by symmetrization $\mathcal{P}(\mathfrak{g}) = S(\mathfrak{g}) \to \mathcal{U}(\mathfrak{g})$.

We choose a basis of $\mathfrak{g} = \mathfrak{so}(3,1,\mathbb{C}) = \mathfrak{k} \oplus \mathfrak{p}$ as follows:

$$H = \begin{bmatrix} 0 & 2i & 0 & 0 \\ -2i & 0 & 0 & 0 \\ 0 & 0 & 0 & 0 \\ 0 & 0 & 0 & 0 \end{bmatrix},\ E = \begin{bmatrix} 0 & 0 & -1 & 0 \\ 0 & 0 & i & 0 \\ 1 & -i & 0 & 0 \\ 0 & 0 & 0 & 0 \end{bmatrix},\ F = \begin{bmatrix} 0 & 0 & 1 & 0 \\ 0 & 0 & i & 0 \\ -1 & -i & 0 & 0 \\ 0 & 0 & 0 & 0 \end{bmatrix},$$

$$Z = \begin{bmatrix} 0 & 0 & 0 & 0 \\ 0 & 0 & 0 & 0 \\ 0 & 0 & 0 & -2 \\ 0 & 0 & -2 & 0 \end{bmatrix},\ X = \begin{bmatrix} 0 & 0 & 0 & 1 \\ 0 & 0 & 0 & -i \\ 0 & 0 & 0 & 0 \\ 1 & -i & 0 & 0 \end{bmatrix},\ Y = \begin{bmatrix} 0 & 0 & 0 & -1 \\ 0 & 0 & 0 & -i \\ 0 & 0 & 0 & 0 \\ -1 & -i & 0 & 0 \end{bmatrix}.$$

Then $\{H, E, F\}$ is a basis of $\mathfrak{k}$ and $\{Z, X, Y\}$ is a basis of $\mathfrak{p}$. The commutators are

$$\begin{array}{lllll} [H,E] = 2E, & [H,X] = 2X, & [E,X] = 0, & [F,X] = Z, & [Z,X] = -2E, \\ [H,F] = -2F, & [H,Z] = 0, & [E,Z] = 2X, & [F,Z] = 2Y, & [Z,Y] = -2F, \\ [E,F] = H, & [H,Y] = -2Y, & [E,Y] = Z, & [F,Y] = 0, & [X,Y] = -H. \end{array}$$

The algebra of G-invariants $S(\mathfrak{g})^G$ is generated by two algebraically independent homogeneous elements $D_1, D_2 \in S^2(\mathfrak{g})$ chosen as multiples of two Casimir elements corresponding to two simple factors $\mathfrak{so}(4,\mathbb{C}) \simeq \mathfrak{sl}(2,\mathbb{C}) \times \mathfrak{sl}(2,\mathbb{C})$:

$$\begin{aligned} D_1 &= \tfrac{1}{4}H^2 + \tfrac{1}{4}Z^2 + \tfrac{1}{2}HZ + EF + EY - FX - XY, \\ D_2 &= \tfrac{1}{4}H^2 + \tfrac{1}{4}Z^2 - \tfrac{1}{2}HZ + EF - EY + FX - XY. \end{aligned}$$

The algebra of K-invariants $S(\mathfrak{k})^K$ is generated by a multiple $\Omega = H^2 + 4EF$ of the Casimir element in $S(\mathfrak{k})$. Instead of generators $\Omega, D_1, D_2 \in S^2(\mathfrak{g})$ of the algebra $S(\mathfrak{g})^K = S(\mathfrak{k})^K \otimes S(\mathfrak{g})^G$ we use $\Omega, \Delta, \Sigma \in S^2(\mathfrak{g})$, where

$$\begin{aligned} \Omega &= H^2 + 4EF, \\ \Delta &= Z^2 - 4XY = 2D_1 + 2D_2 - \Omega, \\ \Sigma &= HZ + 2EY - 2FX = D_1 - D_2. \end{aligned}$$

Thus, generators of the algebra $\mathcal{D}(\mathfrak{g})^K$ of K-invariant linear differential operators on $\mathcal{P}(\mathfrak{g})$ with constant coefficients are

$$\begin{aligned}\partial(\Omega) &= \tfrac{\partial^2}{\partial h^2} + 4\tfrac{\partial^2}{\partial e \partial f},\\ \partial(\Delta) &= \tfrac{\partial^2}{\partial z^2} - 4\tfrac{\partial^2}{\partial x \partial y},\\ \partial(\Sigma) &= \tfrac{\partial^2}{\partial h \partial z} + 2\tfrac{\partial^2}{\partial e \partial y} - 2\tfrac{\partial^2}{\partial f \partial x}.\end{aligned}$$

Here we have identified $\mathcal{P}(\mathfrak{g})$ with $\mathbb{C}[h, e, f, z, x, y]$, where $\{h, e, f, z, x, y\}$ is the basis of the dual space $\mathfrak{g}^*$ which is dual with respect to the chosen basis $\{H, E, F, Z, X, Y\}$ of $\mathfrak{g}$.

The adjoint representation of $\mathfrak{k}$ on $\mathfrak{g}$ extends to representation by derivations of the symmetric algebra $S(\mathfrak{g})$. Denote by π the represention of $\mathfrak{k}$ on $\mathcal{P}(\mathfrak{g})$ obtained by identification $\mathcal{P}(\mathfrak{g}) = S(\mathfrak{g})$ via the nondegenerate trace form $(A, B) \mapsto \operatorname{Tr} AB$ on $\mathfrak{g} = \mathfrak{so}(3, 1, \mathbb{C})$. The operators of the representation π on $\mathcal{P}(\mathfrak{g})$ can be expressed as linear differential operators of first order:

$$\begin{aligned}\pi(H) &= -2e\tfrac{\partial}{\partial e} + 2f\tfrac{\partial}{\partial f} - 2x\tfrac{\partial}{\partial x} + 2y\tfrac{\partial}{\partial y},\\ \pi(E) &= -f\tfrac{\partial}{\partial h} + 2h\tfrac{\partial}{\partial e} - y\tfrac{\partial}{\partial z} - 2z\tfrac{\partial}{\partial x},\\ \pi(F) &= e\tfrac{\partial}{\partial h} - 2h\tfrac{\partial}{\partial f} - x\tfrac{\partial}{\partial z} - 2z\tfrac{\partial}{\partial y}.\end{aligned}$$

Let us now determine the K-harmonic polynomials on $\mathfrak{g}$:

$$\mathcal{H}_K(\mathfrak{g}) = \{P \in \mathcal{P}(\mathfrak{g});\ \partial(\Omega)P = \partial(\Delta)P = \partial(\Sigma)P = 0\} = \bigoplus_{n \in \mathbb{Z}_+} \mathcal{H}_K^n(\mathfrak{g}),$$

where $\mathcal{H}_K^n(\mathfrak{g}) = \mathcal{H}_K(\mathfrak{g}) \cap \mathcal{P}^n(\mathfrak{g})$.

By our results in [2] we have $\mathcal{P}(\mathfrak{g}) \approx \mathcal{P}(\mathfrak{g})^K \otimes \mathcal{H}_K(\mathfrak{g})$, thus

$$\dim\, \mathcal{P}^n(\mathfrak{g}) = \sum_{k=0}^{n} (\dim\, \mathcal{P}^k(\mathfrak{g})^K)(\dim\, \mathcal{H}_K^{n-k}(\mathfrak{g})).$$

Since $\mathfrak{g}$ is 6-dimensional, we have

$$\dim\, \mathcal{P}^n(\mathfrak{g}) = \dim\, S^n(\mathfrak{g}) = \binom{n+5}{5}.$$

Furthermore, we know that the subalgebra of K-invariants $S(\mathfrak{g})^K \approx \mathcal{P}(\mathfrak{g})^K$ is generated by three algebraically independent homogeneous elements $\Omega, \Delta, \Sigma \in S^2(\mathfrak{g})$. Thus, the dimensions of homogeneous spaces of K-invariants are

$$\dim\, \mathcal{P}^n(\mathfrak{g})^K = \begin{cases} 0 & n \text{ odd} \\ \frac{1}{2}(k+1)(k+2) & n = 2k. \end{cases}$$

By induction on $n \in \mathbb{Z}_+$ one gets from these formulas:

PROPOSITION 4.1. *The dimensions of homogeneous spaces of K-harmonic polynomials on $\mathfrak{g}$ are*

$$\dim \mathcal{H}_K^n(\mathfrak{g}) = \begin{cases} 1 & n=0 \\ 4n^2+2 & n \geq 1. \end{cases}$$

LEMMA 4.2. *For any $n \in \mathbb{Z}_+$ define $2n$ linearly independent homogeneous polynomials of degree n :*

$$A_j^n = f^{n-j}y^j, \quad 0 \leq j \leq n, \qquad B_j^{n-1} = f^{n-j-1}y^{j-1}(hy-fz), \quad 1 \leq j \leq n-1.$$

Then all these polynomials are in $\mathcal{H}_K^n(\mathfrak{g})$ and

$$\begin{array}{ll} \pi(H)A_j^n = 2nA_j^n, & \pi(E)A_j^n = 0,\ 0 \leq j \leq n, \\ \pi(H)B_j^{n-1} = (2n-2)B_j^{n-1}, & \pi(E)B_j^{n-1} = 0,\ 1 \leq j \leq n-1. \end{array}$$

The proof is by direct calculations with differential operators $\partial(\Omega)$, $\partial(\Delta)$, $\partial(\Sigma)$, $\pi(H)$ and $\pi(E)$.

Now, from the representation theory of $\mathfrak{k} \simeq \mathfrak{sl}(2,\mathbb{C})$ we see that A_j^n are highest weight vectors of $(2n+1)$-dimensional irreducible subrepresentations of π and bases of the corresponding invariant subspaces are $\{\pi(F)^k A_j^n;\ 0 \leq k \leq 2n\}$, $0 \leq j \leq n$. Furthermore, B_{j-1}^{n-1} are highest weight vectors of $(2n-1)$-dimensional irreducible subrepresentions of π and bases of the corresponding invariant subspaces are $\{\pi(F)^k B_{j-1}^{n-1};\ 0 \leq k \leq 2n-2\}$, $1 \leq j \leq n-1$. Since the homogeneous subspaces $\mathcal{H}_K^n(\mathfrak{g})$ are invariant under the representation π we conclude that all these subspaces are contained in $\mathcal{H}_K^n(\mathfrak{g})$. The sum of their dimensions (for $n \geq 1$) is

$$(n+1)(2n+1) + (n-1)(2n-1) = 4n^2+2 = \dim \mathcal{H}_K^n(\mathfrak{g}).$$

Thus, if we denote by π_n the equivalence class of $(2n+1)$-dimensional irreducible representations of K, we conclude:

PROPOSITION 4.3. *In the representation of K on $\mathcal{H}_K^n(\mathfrak{g})$ the multiplicity of the class π_n is $n+1$ and the multiplicity of the class π_{n-1} is $n-1$. Other classes do not appear in $\mathcal{H}_K^n(\mathfrak{g})$.*

Note that we have reproved (ii) of Theorem 2.2 in the case $\mathfrak{g}_0 = \mathfrak{so}(3,1)$: the multiplicity of π_n is $n+1$ in $\mathcal{H}_K^n(\mathfrak{g})$ and n in $\mathcal{H}_K^{n+1}(\mathfrak{g})$, so all together $2n+1 = d(\pi_n)$ in $\mathcal{H}_K(\mathfrak{g}) \approx \mathcal{H}$.

Now we calculate weird action ω of $\mathfrak{k}$ on $\mathcal{P}(\mathfrak{g})$. We choose the following $X_0 \in \mathfrak{g}_0 = \mathfrak{so}(3,1)$ whose stabilizer $K_{X_0}^{\mathbb{C}}$ in $K^{\mathbb{C}}$ is trivial:

$$X_0 = \begin{bmatrix} 0 & 1 & 0 & 1 \\ -1 & 0 & 0 & 0 \\ 0 & 0 & 0 & 0 \\ 1 & 0 & 0 & 0 \end{bmatrix}.$$

The group $K^{\mathbb{C}}$ consists of all complex matrices of the form

$$k = \begin{bmatrix} a_1 & a_2 & a_3 & 0 \\ b_1 & b_2 & b_3 & 0 \\ c_1 & c_2 & c_3 & 0 \\ 0 & 0 & 0 & 1 \end{bmatrix}$$

such that $kk^t = k^t k = I_4$ and $\det k = 1$. This means that

$$\begin{array}{ll} a_1^2 + a_2^2 + a_3^2 = 1, & a_1^2 + b_1^2 + c_1^2 = 1, \\ a_1b_1 + a_2b_2 + a_3b_3 = 0, & a_1a_2 + b_1b_2 + c_1c_2 = 0, \\ b_1^2 + b_2^2 + b_3^2 = 1, & a_2^2 + b_2^2 + c_2^2 = 1, \\ a_1c_1 + a_2c_2 + a_3c_3 = 0, & a_1a_3 + b_1b_3 + c_1c_3 = 0, \\ c_1^2 + c_2^2 + c_3^2 = 1, & a_3^2 + b_3^2 + c_3^2 = 1, \\ b_1c_1 + b_2c_2 + b_3c_3 = 0, & a_2a_3 + b_2b_3 + c_2c_3 = 0, \end{array}$$

and

$$\begin{array}{lll} a_1b_2 - a_2b_1 = c_3, & a_1c_2 - a_2c_1 = -b_3, & b_1c_2 - b_2c_1 = a_3, \\ a_1b_3 - a_3b_1 = -c_2, & a_1c_3 - a_3c_1 = b_2, & b_1c_3 - b_3c_1 = -a_2, \\ a_2b_3 - a_3b_2 = c_1, & a_2c_3 - a_3c_2 = -b_1, & b_2c_3 - b_3c_2 = a_1. \end{array}$$

Thus we find

$$(\operatorname{Ad} k)X_0 = kX_0k^{-1} = \begin{bmatrix} 0 & c_3 & -b_3 & a_1 \\ -c_3 & 0 & a_3 & b_1 \\ b_3 & -a_3 & 0 & c_1 \\ a_1 & b_1 & c_1 & 0 \end{bmatrix}.$$

We consider the restrictions of polynomials on $\mathfrak{g}$ to the $K^{\mathbb{C}}$-orbit of the element X_0. We get

$$\begin{array}{ll} h((\operatorname{Ad} k)X_0) = -\frac{i}{2}c_3, & e((\operatorname{Ad} k)X_0) = -\frac{i}{2}(a_3 + ib_3), \\ f((\operatorname{Ad} k)X_0) = -\frac{i}{2}(a_3 - ib_3), & z((\operatorname{Ad} k)X_0) = -\frac{1}{2}c_1, \\ x((\operatorname{Ad} k)X_0) = \frac{1}{2}(a_1 + ib_1), & y((\operatorname{Ad} k)X_0) = -\frac{1}{2}(a_1 - ib_1). \end{array}$$

For $C = hy - fz \in \mathcal{P}^2(\mathfrak{g})$ we get

$$C((\operatorname{Ad} k)X_0) = -\tfrac{1}{4}(a_2 - ib_2).$$

The restriction to the $K^{\mathbb{C}}$-orbit $K^{\mathbb{C}}.X_0$ is an isomorphism of the space $\mathcal{H}_K(\mathfrak{g})$ of K-harmonic polynomials onto the space $\mathcal{R}(K^{\mathbb{C}}.X_0)$ of regular functions on $K^{\mathbb{C}}.X_0$. As the stabilizer of X_0 in $K^{\mathbb{C}}$ is trivial, the action of $K^{\mathbb{C}}$ gives rise to the isomorphism $k \mapsto (\operatorname{Ad} k)X_0$ of algebraic varieties $K^{\mathbb{C}} \to K^{\mathbb{C}}.X_0$. Thus we can consider the restriction to the orbit $K^{\mathbb{C}}.X_0$ as an isomorphism of $\mathcal{H}_K(\mathfrak{g})$ onto $\mathcal{R}(K^{\mathbb{C}})$. This isomorphism transfers the adjoint representation of K to the left regular representation of K on $\mathcal{R}(K^{\mathbb{C}})$. We want to compute the representation ω of K on $\mathcal{H}_K(\mathfrak{g})$ obtained by the inverse isomorphism

$\mathcal{R}(K^{\mathbb{C}}) \to \mathcal{H}_K(\mathfrak{g})$ from the right regular representation of K on $\mathcal{R}(K^{\mathbb{C}})$. For $X \in \mathfrak{k}_0$ and for a K-harmonic polynomial $P \in \mathcal{H}_K(\mathfrak{g})$ we have

$$(\omega(X)P)((\operatorname{Ad} k)X_0) = \frac{\mathrm{d}}{\mathrm{d}t} P((\operatorname{Ad} k\mathrm{e}^{tX})X_0)\Big|_{t=0}, \qquad k \in K^{\mathbb{C}}.$$

To describe the action ω of $\mathfrak{k}$ on $\mathcal{H}_K(\mathfrak{g})$ it is enough to compute this action only on the highest weight vectors A_j^n and B_j^n for the adjoint representation π which are defined in Lemma 1. With the introduced notation $C = hy - fz \in \mathcal{P}^2(\mathfrak{g})$ we have

$$A_j^n = f^{n-j}y^j, \quad 0 \le j \le n, \qquad B_j^n = f^{n-j}y^{j-1}C, \quad 1 \le j \le n.$$

Explicit calculation from the definition of the representation ω on $\mathcal{H}_K(\mathfrak{g})$ leads to:

LEMMA 4.4. *The operators $\omega(H)$, $\omega(E)$ and $\omega(F)$ act on the polynomials f, y and $C = hy - fz$ as follows:*

$$\begin{array}{lll} \omega(H)f = 0, & \omega(E)f = -iy - 2C, & \omega(F)f = iy - 2C, \\ \omega(H)y = -4iC, & \omega(E)y = -if, & \omega(F)y = if, \\ \omega(H)C = iy, & \omega(E)C = -\frac{1}{2}f, & \omega(F)C = -\frac{1}{2}f. \end{array}$$

From the relations among the matrix elements of $k \in K^{\mathbb{C}}$ we have

$$(a_1 - ib_1)^2 + (a_2 - ib_2)^2 + (a_3 - ib_3)^2 =$$
$$(a_1^2 + a_2^2 + a_3^2) - (b_1^2 + b_2^2 + b_3^2) - 2i(a_1b_1 + a_2b_2 + a_3b_3) = 0.$$

Using the formulas for the restriction of the polynomials to the orbit $K^{\mathbb{C}}.X_0$ we find that on this orbit

$$4C^2 - f^2 + y^2 = \tfrac{1}{4}(a_2 - ib_2)^2 + \tfrac{1}{4}(a_3 - ib_3)^2 + \tfrac{1}{4}(a_1 - ib_1)^2 = 0.$$

Therefore, we conclude:

LEMMA 4.5. *Restricted to the orbit $K^{\mathbb{C}}.X_0$ one has the identity*

$$C^2 = \tfrac{1}{4}f^2 - \tfrac{1}{4}y^2.$$

From Lemmas 4.4 and 4.5 we compute the action ω on the π-highest weight vectors in $\mathcal{H}_K(\mathfrak{g})$:

THEOREM 4.6. *The weird representation ω of $\mathfrak{k}$ on $\mathcal{H}_K(\mathfrak{g})$ acts on the π-highest weight vectors A_j^n, B_j^n as follows:*

$$\begin{array}{l} \omega(H)A_j^n = -4ijB_j^n, \\ \omega(H)B_j^n = -i(j-1)A_{j-2}^n + ijA_j^n, \\ \omega(E)A_j^n = -i(n-j)A_{j+1}^n - ijA_{j-1}^n - 2(n-j)B_{j+1}^n, \\ \omega(E)B_j^n = -\frac{1}{2}(n-j+1)A_{j-1}^n + \frac{1}{2}(n-j)A_{j+1}^n - i(j-1)B_{j-1}^n - i(n-j)B_{j+1}^n, \\ \omega(F)A_j^n = i(n-j)A_{j+1}^n + ijA_{j-1}^n - 2(n-j)B_{j+1}^n, \\ \omega(F)B_j^n = -\frac{1}{2}(n-j+1)A_{j-1}^n + \frac{1}{2}(n-j)A_{j+1}^n + i(j-1)B_{j-1}^n + i(n-j)B_{j+1}^n. \end{array}$$

As the weird action ω commutes with the adjoint action π, one obtains from Theorem 4.6 the action of the operators $\omega(H)$, $\omega(E)$ and $\omega(F)$ on the basis of $\mathcal{H}_K(\mathfrak{g})$:

$$\{\pi(F)^k A_j^n;\ n\in\mathbb{Z}_+,\ 0\le j\le n,\ 0\le k\le 2n\}\cup \{\pi(F)^k B_j^n;\ n\in\mathbb{N},\ 1\le j\le n,\ 0\le k\le 2n\}.$$

The irreducible constituents of the representation ω of degree $(2n+1)$ are acting on the subspaces

$$\mathcal{H}_K(\mathfrak{g})^n=\operatorname{span}\{A_0^n,A_1^n,\dots,A_n^n,B_1^n,\dots,B_n^n\},\quad \pi(F)^k\mathcal{H}_K(\mathfrak{g})^n,\quad 1\le k\le 2n.$$

To find the highest vector for the action ω on $\mathcal{H}_K(\mathfrak{g})^n$ (and thus also for $\pi(F)^k\mathcal{H}_K(\mathfrak{g})^n$) one has to solve the equation

$$\omega(H)P=2nP,\quad P=\sum_{j=0}^{n}\alpha_j A_j^n+\sum_{j=1}^{n}\beta_j B_j^n,$$

or, equivalently, $\omega(E)P=0$. Using the formulas in Theorem 4.6 one obtains recursive equations for calculating the coefficients α_j and β_j. It turns out that in the case of even $n=2m$ the coefficients α_j and β_j vanish for odd j and

$$\alpha_{2j}=(-1)^j 2^{2j} m\frac{(m+j-1)!}{(m-j)!(2j)!}\alpha_0,$$

$$\beta_{2j}=(-1)^{j+1} i 2^{2j} j\frac{(m+j-1)!}{(m-j)!(2j-1)!}\alpha_0,$$

$1\le j\le m$. In the case of odd $n=2m+1$ the coefficients α_j and β_j vanish for even j, and

$$\alpha_{2j+1}=(-1)^j 2^{2j}\frac{(m+j)!}{(m-j)!(2j+1)!}\alpha_1,$$

$$\beta_{2j+1}=(-1)^{j+1} i 2^{2j+1}\frac{(m+j)!}{(2m+1)(m-j)!(2j)!}\alpha_1,$$

$0\le j\le m$. Thus

PROPOSITION 4.7. *In the irreducible constituents $\pi(F)^k\mathcal{H}_K(\mathfrak{g})^n$, $n\in\mathbb{Z}_+$, $0\le k\le 2n$, the highest weight vectors for the weird action ω are $\pi(F)^k P_n$, where*

$$P_{2m}=\sum_{j=0}^{m}(-1)^j 2^{2j} m\frac{(m+j-1)!}{(m-j)!(2j)!}A_{2j}^{2m}+ +\sum_{j=1}^{m}(-1)^{j+1} i 2^{2j} j\frac{(m+j-1)!}{(m-j)!(2j-1)!}B_{2j}^{2m},$$

and

$$P_{2m+1}=\sum_{j=0}^{m}(-1)^j 2^{2j}\frac{(m+j)!}{(m-j)!(2j+1)!}A_{2j+1}^{2m+1}+ \\ +\sum_{j=0}^{m}(-1)^{j+1}i2^{2j+1}\frac{(m+j)!}{(2m+1)(m-j)!(2j)!}B_{2j+1}^{2m+1}.$$

Thus, expressed through variables h,e,f,z,x,y and $C=hy-fz$ we have $P_0=1$, $P_1=y-2iC$, $P_2=f^2-2y^2+4iyC$, $P_3=f^2y-\frac{4}{3}y^3-\frac{2i}{3}f^2C+\frac{8i}{3}y^2C$, $P_4=f^4-8f^2y^2+8y^4+8if^2yC-32iy^3C$, $P_5=f^4y-4f^2y^3+\frac{16}{5}y^5-\frac{2i}{5}f^4C+\frac{24i}{5}f^2y^2C-\frac{32i}{5}y^4C$ etc.

The weird action ω is extended to $\mathcal{P}(\mathfrak{g})=\mathcal{P}(\mathfrak{g})^K\otimes\mathcal{H}_K(\mathfrak{g})$ trivially on $\mathcal{P}(\mathfrak{g})^K$, i.e. $\omega(\mathfrak{k})\mathcal{P}(\mathfrak{g})^K=0$. Our aim was to try to express this action using some K-invariant linear differential operators on $\mathcal{P}(\mathfrak{g})$ with polynomial coefficients. Unfortunately, it does not seem possible. Here is the action of the operators $\omega(H)$, $\omega(E)$ and $\omega(F)$ on the monomial bases of $\mathcal{P}^1(\mathfrak{g})$ and $\mathcal{P}^2(\mathfrak{g})$:

$\omega(H)h=0,$	$\omega(E)h=-iz+ey+fx,$	$\omega(F)h=iz+ey+fx,$
$\omega(H)e=0,$	$\omega(E)e=ix-2hx-2ez,$	$\omega(F)e=-ix-2hx-2ez,$
$\omega(H)f=0,$	$\omega(E)f=-iy-2hy+2fz,$	$\omega(F)f=iy-2hy+2fz,$
$\omega(H)z=2iey+2ifx,$	$\omega(E)z=-ih,$	$\omega(F)z=ih,$
$\omega(H)x=4ihx+4iez,$	$\omega(E)x=ie,$	$\omega(F)x=-ie,$
$\omega(H)y=-4ihy+4ifz,$	$\omega(E)y=-if,$	$\omega(F)y=if.$

$$\begin{aligned}
&\omega(H)h^2=0,\\
&\omega(H)f^2=0,\\
&\omega(H)he=0,\\
&\omega(H)fz=-\tfrac{i}{2}y-2ih^2y+2ihfz+iefy+if^2x,\\
&\omega(H)hf=0,\\
&\omega(H)fx=-iz+2ihey+2ihfx,\\
&\omega(H)hz=12ihey+12ihfx,\\
&\omega(H)fy=-4ihfy+4if^2z,\\
&\omega(H)hx=-\tfrac{i}{2}x+2ih^2x+2ihez-ie^2y-ifx^2,\\
&\omega(H)z^2=4iezy+4ifzx,\\
&\omega(H)hy=\tfrac{i}{2}y-2ih^2y+2ihfz+iefy+if^2x,\\
&\omega(H)zx=4ihzx+4iez^2+2iexy+2ifx^2,\\
&\omega(H)e^2=0,\\
&\omega(H)zy=-4ihzy+4ifz^2+2iey^2+2ifxy,\\
&\omega(H)ef=0,\\
&\omega(H)x^2=8ihx^2+8iezx,\\
&\omega(H)ez=ix-2ih^2x-2ihez+ie^2y+iefx,\\
&\omega(H)xy=4iezy+4ifzx,\\
&\omega(H)ex=4ihex+4ie^2z,\\
&\omega(H)y^2=-8ihy^2+8ifzy.\\
&\omega(H)ey=\tfrac{i}{2}y-2ihey-2ihfx,
\end{aligned}$$

$$
\begin{aligned}
&\omega(E)h^2 = -\tfrac{4i}{3}hz + \tfrac{i}{3}ey - \tfrac{i}{3}fx + 2hey + 2hfx,\\
&\omega(E)e^2 = 2iex - 4hex - 4e^2z,\\
&\omega(E)he = ihx - iez - 2h^2x - 2hez + e^2y + efx,\\
&\omega(E)ex = ie^2 + ix^2 - 2hx^2 - 2ezx,\\
&\omega(E)hf = -ihy - ifz - 2h^2y + 2hfz + efy + f^2x,\\
&\omega(E)f^2 = -2ify - 4hfy + 4f^2z,\\
&\omega(E)hz = -\tfrac{2i}{3}h^2 + \tfrac{i}{3}ef - \tfrac{2i}{3}z^2 - \tfrac{i}{3}xy + ezy + fzx,\\
&\omega(E)fy = -if^2 - iy^2 - 2hy^2 + 2fzy,\\
&\omega(E)hx = -\tfrac{1}{4}e + ihe - izx + hzx + ez^2 + \tfrac{1}{2}exy + \tfrac{1}{2}fx^2,\\
&\omega(E)z^2 = -\tfrac{4i}{3}hz + \tfrac{i}{3}ey - \tfrac{i}{3}fx,\\
&\omega(E)hy = -\tfrac{1}{4}f - ihf + izy - hzy + \tfrac{1}{2}ey^2 + fz^2 + \tfrac{1}{2}fxy,\\
&\omega(E)zx = -ihx + iez,\\
&\omega(E)ef = \tfrac{4i}{3}hz - \tfrac{i}{3}ey + \tfrac{i}{3}fx - 2hey - 2hfx,\\
&\omega(E)zy = -ihy - ifz,\\
&\omega(E)ez = -\tfrac{1}{4}e - ihe + izx - hzx - ez^2 - \tfrac{1}{2}exy - \tfrac{1}{2}fx^2,\\
&\omega(E)x^2 = 2iex,\\
&\omega(E)ey = \tfrac{1}{2}h + \tfrac{2i}{3}h^2 - \tfrac{i}{3}ef + \tfrac{2i}{3}z^2 + \tfrac{i}{3}xy - ezy - fzx,\\
&\omega(E)xy = -\tfrac{4i}{3}hz + \tfrac{i}{3}ey - \tfrac{i}{3}fx,\\
&\omega(E)fz = \tfrac{1}{4}f - ihf - izy - hzy + \tfrac{1}{2}ey^2 + fz^2 + \tfrac{1}{2}fxy,\\
&\omega(E)y^2 = -2ify.\\
&\omega(E)fx = \tfrac{1}{2}h - \tfrac{2i}{3}h^2 + \tfrac{i}{3}ef - \tfrac{2i}{3}z^2 - \tfrac{i}{3}xy + ezy + fzx,
\end{aligned}
$$

$$
\begin{aligned}
&\omega(F)h^2 = \tfrac{4i}{3}hz - \tfrac{i}{3}ey + \tfrac{i}{3}fx + 2hey + 2hfx,\\
&\omega(F)e^2 = -2iex - 4hex - 4e^2z,\\
&\omega(F)he = -ihx + iez - 2h^2x - 2hez + e^2y + efx,\\
&\omega(F)ex = -ie^2 - ix^2 - 2hx^2 - 2ezx,\\
&\omega(F)hf = ihy + ifz - 2h^2y + 2hfz + efy + f^2x,\\
&\omega(F)f^2 = 2ify - 4hfy + 4f^2z,\\
&\omega(F)hz = \tfrac{2i}{3}h^2 - \tfrac{i}{3}ef + \tfrac{2i}{3}z^2 + \tfrac{i}{3}xy + ezy + fzx,\\
&\omega(F)fy = if^2 + iy^2 - 2hy^2 + 2fzy,\\
&\omega(F)hx = -\tfrac{1}{4}e - ihe + izx + hzx + ez^2 + \tfrac{1}{2}exy + \tfrac{1}{2}fx^2,\\
&\omega(F)z^2 = \tfrac{4i}{3}hz - \tfrac{i}{3}ey + \tfrac{i}{3}fx,\\
&\omega(F)hy = -\tfrac{1}{4}f + ihf - izy - hzy + \tfrac{1}{2}ey^2 + fz^2 + \tfrac{1}{2}fxy,\\
&\omega(F)zx = ihx - iez,\\
&\omega(F)ef = -\tfrac{4i}{3}hz + \tfrac{i}{3}ey - \tfrac{i}{3}fx - 2hey - 2hfx,\\
&\omega(F)zy = ihy + ifz,\\
&\omega(F)ez = -\tfrac{1}{4}e + ihe - izx - hzx - ez^2 - \tfrac{1}{2}exy - \tfrac{1}{2}fx^2,\\
&\omega(F)x^2 = -2iex,\\
&\omega(F)ey = \tfrac{1}{2}h - \tfrac{2i}{3}h^2 + \tfrac{i}{3}ef - \tfrac{2i}{3}z^2 - \tfrac{i}{3}xy - ezy - fzx,\\
&\omega(F)xy = \tfrac{4i}{3}hz - \tfrac{i}{3}ey + \tfrac{i}{3}fx,\\
&\omega(F)fz = \tfrac{1}{4}f + ihf + izy - hzy + \tfrac{1}{2}ey^2 + fz^2 + \tfrac{1}{2}fxy,\\
&\omega(F)y^2 = 2ify.\\
&\omega(F)fx = \tfrac{1}{2}h + \tfrac{2i}{3}h^2 + \tfrac{2i}{3}z^2 - \tfrac{i}{3}ef + \tfrac{i}{3}xy + ezy + fzx,
\end{aligned}
$$

Finally, we note that when inspecting K-invariant linear differential operators on $\mathcal{P}(\mathfrak{g})$ with polynomial coefficients we found another representation κ of $\mathfrak{k}$ on $\mathcal{P}(\mathfrak{g})$ commuting with π. It is given by the following derivations of

the algebra $\mathcal{P}(\mathfrak{g})$:

$$\begin{aligned}\kappa(H) &= -h\tfrac{\partial}{\partial h} - e\tfrac{\partial}{\partial e} - f\tfrac{\partial}{\partial f} + z\tfrac{\partial}{\partial z} + x\tfrac{\partial}{\partial x} + y\tfrac{\partial}{\partial y},\\ \kappa(E) &= z\tfrac{\partial}{\partial h} - x\tfrac{\partial}{\partial e} + y\tfrac{\partial}{\partial f},\\ \kappa(F) &= h\tfrac{\partial}{\partial z} - e\tfrac{\partial}{\partial x} + f\tfrac{\partial}{\partial y}.\end{aligned}$$

This representation does not commute with $\partial(\Omega)$, $\partial(\Delta)$ and $\partial(\Sigma)$, but the space of K-harmonic polynomials is nevertheless κ-invariant since the commutators are

$$\begin{array}{lll}[\kappa(H),\partial(\Omega)] = 2\partial(\Omega), & [\kappa(E),\partial(\Omega)] = 0, & [\kappa(F),\partial(\Omega)] = -2\partial(\Sigma),\\ [\kappa(H),\partial(\Delta)] = -2\partial(\Delta), & [\kappa(E),\partial(\Delta)] = -2\partial(\Sigma), & [\kappa(F),\partial(\Delta)] = 0,\\ [\kappa(H),\partial(\Sigma)] = 0, & [\kappa(E),\partial(\Sigma)] = -\partial(\Omega), & [\kappa(F),\partial(\Sigma)] = -\partial(\Delta).\end{array}$$

The homogeneous subspaces $\mathcal{P}^n(\mathfrak{g})$, thus also $\mathcal{H}^n_K(\mathfrak{g})$, are evidently κ-invariant. The action on the vectors A^n_j and B^n_j is:

$$\begin{array}{llll}\kappa(H)A^n_j = (2j-n)A^n_j, & \kappa(E)A^n_j = (n-j)A^n_{j+1}, & \kappa(F)A^n_j = jA^n_{j-1}, & 0 \le j \le n,\\ \kappa(H)B^n_j = (2j-n-1)B^n_j, & \kappa(E)B^n_j = (n-j)B^n_{j+1}, & \kappa(F)B^n_j = (j-1)B^n_{j-1}, & 1 \le j \le n.\end{array}$$

Thus, we see that the subspace $\operatorname{span}\{A^n_j;\ 0 \le j \le n\}$ is κ-invariant and the corresponding subrepresentation is irreducible of degree $n+1$. The same holds for the subspaces $\operatorname{span}\{\pi(F)^k A^n_j;\ 0 \le j \le n\}$, $1 \le k \le 2n$. Similarly, the subspace $\operatorname{span}\{B^n_j;\ 1 \le j \le n\}$ (and also $\operatorname{span}\{\pi(F)^k B^n_j;\ 1 \le j \le n\}$, $1 \le k \le 2n$) is κ-invariant and the corresponding subrepresentation is irreducible of degree n.

The subalgebra $\mathcal{P}(\mathfrak{g})^K$ of K-invariants is κ-invariant. We have $\mathcal{P}(\mathfrak{g})^K = \mathbb{C}[\omega,\delta,\sigma]$, where ω, δ and σ are quadratic polynomials:

$$\omega = h^2 + ef, \quad \delta = z^2 - xy, \quad \sigma = 2hz + ey - fx.$$

κ acts on them as follows

$$\begin{array}{lll}\kappa(H)\omega = -2\omega, & \kappa(E)\omega = \sigma, & \kappa(F)\omega = 0,\\ \kappa(H)\delta = 2\delta, & \kappa(E)\delta = 0, & \kappa(F)\delta = \sigma,\\ \kappa(H)\sigma = 0, & \kappa(E)\sigma = 2\delta, & \kappa(F)\sigma = 2\omega.\end{array}$$

Therefore, the subrepresention of κ on the 3-dimensional invariant subspace $\mathbb{C}^1[\omega,\delta,\sigma] = \operatorname{span}\{\omega,\delta,\sigma\}$ is irreducible. Since the representation κ of $\mathfrak{k}$ acts by derivations, we conclude that all irreducible constituents of κ in $\mathcal{P}(\mathfrak{g})^K$ are of odd degree.

The representation κ on $\mathcal{P}(\mathfrak{g})$ is locally finite, thus the corresponding represention of $\mathfrak{k}_0$ integrates to a representation of a simply connected compact Lie group with the Lie algebra $\mathfrak{k}_0$. Since among the irreducible constituents of κ are not only those of odd degree but also those of even degree, this group is not $K \approx \mathrm{SO}(3)$ but its 2-fold covering group $\approx \mathrm{SU}(2)$. Finally, since $\mathfrak{k}_0$ acts by derivations, the action of the integrated representation on $\mathcal{P}(\mathfrak{g})$ is by automorphisms.

Acknowledgements.

The author was supported by the QuantiXLie Centre of Excellence, a project cofinanced by the Croatian Government and European Union through the European Regional Development Fund - the Competitiveness and Cohesion Operational Programme (Grant KK.01.1.1.01.0004).

References

[1] F. Knop, *Der Zentralisator einer Liealgebra in einer einhülende Algebra*, J. Reine Angew. Math. **406** (1990), 5–9.

[2] H. Kraljević, *The structure of the algebra* $(\mathcal{U}(\mathfrak{g}) \otimes C(\mathfrak{p}))^K$ *for the groups* $\mathrm{SU}(n,1)$ *and* $\mathrm{SO}_e(n,1)$, Math. Commun. **27** (2022), 11–18.

Neobično K-djelovanje na $\mathcal{U}(\mathfrak{g})$ za $\mathfrak{so}(n,1)$ i $\mathfrak{su}(n,1)$

Hrvoje Kraljević

Sažetak. Neka je $\mathfrak{g}_0$ ili $\mathfrak{so}(n,1)$ ili $\mathfrak{su}(n,1)$, $\mathfrak{g}$ njezina kompleksifikacija, K maksimalna kompaktna podgrupa adjungirane grupe od $\mathfrak{g}_0$, $\mathcal{U}(\mathfrak{g})$ univerzalna omotačka algebra od $\mathfrak{g}$ i $\mathcal{U}(\mathfrak{g})^K$ njezina podalgebra K-invarijanata. Posljedica rezultata iz [2] je da osim uobičajenog adjungiranog djelovanja od K na $\mathcal{U}(\mathfrak{g})$ postoji i drugo djelovanje od K koje komutira s adjungiranim djelovanjem i ostavlja $\mathcal{U}(\mathfrak{g})^K$ po točkama invarijantnim. Slučaj $\mathfrak{g}_0 = \mathfrak{so}(2,1) \simeq \mathfrak{su}(1,1)$ je trivijalan jer je K komutativna i neobično djelovanje od K podudara se s inverzom adjungiranog djelovanja. U ovom članku detaljno smo proučili neobično djelovanje od K u najjednostavnijem netrivijalnom slučaju $\mathfrak{g}_0 = \mathfrak{so}(3,1)$.

Department of Mathematics
University of Zagreb
10 000 Zagreb, Croatia
E-mail: hrvoje.kraljevic@math.hr

Received: 29.5.2023.
Revised: 16.9.2023.
Accepted: 17.10.2023.

RAD HAZU. MATEMATIČKE ZNANOSTI
Vol. 28 = 558 (2024): 259-281
DOI: https://doi.org/10.21857/94kl4c1j8m

LOGARITHMIC VERTEX ALGEBRAS RELATED TO $\mathfrak{sp}(4)$

Dražen Adamović and Antun Milas

Dedicated to Marko Tadić on the occasion of his 70th birthday

Abstract. We present several results and conjectures pertaining to parafermion vertex algebra and related logarithmic vertex algebras. Starting from the tensor product of two copies of the singlet vertex algebra $\mathcal{M}(2)$, we consider various subalgebras that appear in its decomposition including $N_{-1}(sl(2))$ and its $\mathbb{Z}_2$-fixed point algebra, and the S_2-symmetric orbifold of the singlet vertex algebra $\mathcal{M}(2)$. In particular, we show that $N_{-1}(sl(2))$ has an extension to a W-algebra of type $(2,3,4,5,6,7,8)$. Finally we state some conjectures about singlet and triplet type W-algebras of type $\mathfrak{sp}(4)$ and their characters.

1. Introduction

The development of the parafermion conformal field theory was significantly aided by the introduction of parafermion vertex algebras. These algebras are initially defined as subalgebras of the generalized vertex algebras generated by Z-operators that were needed for the vertex-operator-theoretic interpretation of Rogers-Ramanujan partition identities [25],[24].

Over the last ten years, there has been extensive research on the parafermion vertex operator algebras linked to rational affine vertex operator algebras at positive integer levels, resulting in a comprehensive understanding of their structure [10,15,16]. However, for other levels, such as generic levels, their structure remains largely unknown.

For $\mathfrak{g} = \mathfrak{sl}(2)$, much more is known due to recent breakthroughs in understanding affine W-algebras at admissible levels. At generic levels, it is known that this vertex algebra is non-freely generated and is of type $(2,3,4,5)$. There are two distinguished generic levels of interest here: $k = -\frac{3}{2}$ and $k = -1$. It can be easily seen that $k = -\frac{3}{2}$ is the only level that admits an embedding of the principal affine W algebra for $\mathfrak{g}$ of type A_2 inside the parafermion algebra. This case was considered in our previous paper with Wang [6] where

2020 *Mathematics Subject Classification.* Primary 17B69; Secondary 17B20, 17B67.
Key words and phrases. Vertex algebra, parafermion algebra.

we obtained many structural results including results for related logarithmic algebras.

In this paper we focus on the parafermion algebra at $k = -1$. This case is interesting because $k = -1$ is the sole level that permits embedding of the affine W-algebra associated to $\mathfrak{sp}(4)$ inside the parafermion algebra. The objective of this paper is to repeat the analysis conducted in our previous paper [6], now involving the rank two symplectic Lie algebra.

The paper is structured as follows: Section 2 provides a review of notation and basic facts related to the symplectic fermion vertex algebra and its orbifold subalgebras. Section 3 focuses on the generic parafermion vertex algebra $N_k(\mathfrak{sl}_2)$ of level $k = -1$. The singlet algebra $\mathcal{M}(2)^{\otimes 2}$ is studied in relation to $N_{-1}(\mathfrak{sl}_2)$ including decomposition of the former in terms of irreducible $N_{-1}(\mathfrak{sl}_2)$-modules. Several results are proven, including a new type of character formula. Sections 4 and 5 primarily deal with decompositions of $N_{-1}(\mathfrak{sl}_2)$ and its orbifold subalgebra $N_{-1}(\mathfrak{sl}_2)^+$ in terms of the affine W-algebra $W_{-5/2}(\mathfrak{sp}(4))$. Section 6 focuses on another automorphism of order two of $\mathcal{M}(2)^{\otimes 2}$, the symmetric orbifold. A structure theorem for the orbifold subalgebra is presented in this section. In Section 7, the Virasoro vertex algebra $L(-2, 0)$ contained in $\mathcal{M}(2)$ is considered. The decomposition of $L(-2, 0)^{\otimes 2}$ in terms of $W_{-5/2}(\mathfrak{sp}(4))$ modules is explored in this section. The last part of the paper contemplates on the existence of a series of singlet and triplet type vertex algebras associated to $\mathfrak{sp}(4)$. Motivated by the $\mathfrak{sl}(3)$ singlet type algebras, conjectural expressions for their q-characters are presented.

2. Preliminaries

In this part we setup some notation and summarize facts we need later.

- Let $\mathfrak{g}$ be the simple Lie algebra with Cartan subalgebra $\mathfrak{h}$ and triangular decomposition $\mathfrak{g} = \mathfrak{n}_- + \mathfrak{h} + \mathfrak{n}_+$.
- Let $\hat{\mathfrak{g}}$ be the associated affine Lie algebra, and $\hat{\mathfrak{h}}$ be the associated Heisenberg subalgebra.
- Let $V^k(\mathfrak{g})$ be the universal affine vertex operator algebra of level k associated to the simple Lie algebra $\mathfrak{g}$.
- Let $V_k(\mathfrak{g})$ be the simple quotient of $V^k(\mathfrak{g})$.
- Let $W^k(\mathfrak{g})$ be the universal principal affine W-algebra $W^k(\mathfrak{g}, f_{pr})$ of level k.
- Let $W_k(\mathfrak{g})$ be the simple quotient of be the simple quotient of $W^k(\mathfrak{g})$.
- Let $N^k(\mathfrak{g}) = \{v \in V^k(\mathfrak{g}) \mid h(n)v = 0 \quad h \in \mathfrak{h}, n \in \mathbb{Z}_{\geq 0}\}$ be the parafermion subalgebra of $V^k(\mathfrak{g})$.
- Let $N_k(\mathfrak{g}) = \{v \in V_k(\mathfrak{g}) \mid h(n)v = 0 \quad h \in \mathfrak{h}, n \in \mathbb{Z}_{\geq 0}\}$ be the parafermion subalgebra of $V_k(\mathfrak{g})$.

- For a $\lambda \in P_+$, let $V_{\mathfrak{g}}(\lambda)$ be the irreducible finite-dimensional $\mathfrak{g}$–module with the highest weight λ, where P_+ denotes the set of dominant integral weights for $\mathfrak{g}$.
- Let $V^k(\lambda)$ be the generalized Verma module for $\hat{\mathfrak{g}}$–module induced from $\mathfrak{g}$–module $V_{\mathfrak{g}}(\lambda)$. Let $L_k(\lambda)$ be its simple quotient.
- For $\lambda, \mu \in P_+$, let $T^{k+3}_{\lambda,\mu}$ denotes the $\mathcal{W}^k(\mathfrak{g})$–module obtained as $H_{DS}(V^k(\lambda - (k+3)\mu)$ (cf. [9]).
- Let $L(c,0)$ denotes the simple Virasoro vertex algebra of central charge c.
- For $k = -3 + \frac{1}{p}$ and $\mathfrak{g} = \mathfrak{sp}(4)$, the universal affine vertex algebra $V^k(\mathfrak{sp}(4))$ is simple (cf. [21]), and therefore by [7] $H_{DS}(V^k(\mathfrak{sp}(4)) = W^k(\mathfrak{sp}(4))$ is simple. In particular, $W^{-5/2}(\mathfrak{sp}(4))$ is a simple vertex algebra of central cherge $c = -4$.
- Let $\mathcal{M}(p)$ denotes the singlet vertex algebra of central charge $1 - 6\frac{(p-1)^2}{p}$ (cf. [2]). The singlet vertex algebra $\mathcal{M}(2)$ is isomorphic to the principal affine $\mathcal{W}$–algebra $W_{-3/2}(\mathfrak{sl}(3))$ of central charge $c = -2$ (cf. [30]).

We shall need the following facts which are well-known. Let $\mathfrak{g} = \mathfrak{sl}(2)$ with a Chevalley basis $\{e, f, h\}$ and let $k = -1$. Then we have:

- $V^k(\mathfrak{g}) = V_k(\mathfrak{g})$.
- $V^k(j\omega_1) = L_k(j\omega_1)$, $j \in \mathbb{Z}_{\geq 0}$, where ω_1 is the fundamental dominant weight for $\mathfrak{sl}(2)$.
- $N^k(j) := N^k(j\omega_1) = N_k(j\omega_1)$, $j \in \mathbb{Z}_{\geq 0}$, where $N^k(j\omega_1) = \{v \in V^k(j\omega_1) \mid h(n)v = 0, \ \forall\ n \in \mathbb{Z}_{\geq 0}\}$ and $N_k(j\omega_1) = \{v \in L_k(j\omega_1) \mid h(n)v = 0, \ \forall\ n \in \mathbb{Z}_{\geq 0}\}$.

We denote by $\mathrm{ch}[M](q) := \mathrm{tr}_M q^{L(0)}$ the character of a V-module M; from the context it should be clear what the vertex algebra is. Also, for simplicity we suppressed the conformal anomaly $-\frac{c}{24}$. For a vertex algebra V, the vertex algebra $V \otimes V$ admits an S_2-action permuting two tensor factors. The fixed point subalgebra will be denoted by $(V \otimes V)^{S_2}$. Its character is known to be

$$\mathrm{ch}[(V \otimes V)^{S_2}](q) = \frac{1}{2}\left(\mathrm{ch}[V]^2(q) + \mathrm{ch}[V](q^2)\right). \tag{2.1}$$

We will often use the q-Pochhammer symbol $(a;q)_n := \prod_{i=1}^{n}(1 - aq^{n-1})$ and $(q)_n = (q;q)_n$.

2.1. *The vertex algebra $W^k(\mathfrak{sp}(4))$.* Let $W^k(\mathfrak{sp}(4))$ denotes the principal affine W–algebra $W^k(\mathfrak{sp}(4), f_{pr})$ of level k and central charge

$$c = c_k = -\frac{2(12+5k)(13+6k)}{3+k}.$$

It is generated by the Virasoro field $L(z) = \sum_{m\in\mathbb{Z}} L(m)z^{-m-2}$ and another field of conformal weight 4:

$$W(z) = \sum_{m\in\mathbb{Z}} W(m)z^{-m-4}.$$

The bracket relations (i.e, the OPE) are well-known (see for instance [17, Section 3.2]) and not needed here.

Let $L^W(c,h,h_W)$ denotes the irreducible highest weight $W^k(\mathfrak{sp}(4))$–module of the highest weight (h,h_W) with respect to $(L(0),W(0))$.

Note that for $k=-3+1/p$ we have $c_k = 86 - \frac{60}{p} - 30p$. We expect that this level is generic and the following conjecture holds:

CONJECTURE 2.1. *Let $k=-3+1/p$ and $c_k = 86 - \frac{60}{p} - 30p$. Then $T^{k+3}_{\lambda,0}$ is an irreducible $W^k(\mathfrak{sp}(4))$–module and $H_{DS}(L_k(\lambda)) = T^{k+3}_{\lambda,0}$ for each dominant integral weights λ for $\mathfrak{sp}(4)$.*

2.2. *Symplectic fermion vertex algebra $\mathcal{SF}(d)$.* The symplectic fermion vertex algebra $\mathcal{SF}(d)$ (see [1] for more details) is the universal vertex superalgebra generated by odd fields/vectors b_i and c_i $(i=1,\dots,n)$ with the following non-trivial λ–bracket

$$[(b_i)_\lambda c_j] = \delta_{i,j}\lambda.$$

$\mathcal{SF}(d)$ can be realized on the irreducible level one module for the Lie superalgebra with generators

$$\{K, b_i(n), c_i(n), n\in\mathbb{Z}\}$$

and relations

$$\{b_i(n),b_j(m)\} = \{c_i(n),c_j(m)\} = 0, \quad \{b_i(n),c_j(m)\} = n\delta_{i,j}\delta_{n+m,0}K.$$

Here K is central and other super-commutators are trivial. As a vector space,

$$\mathcal{SF}(d) = \bigwedge \text{span}\left\{b_i(-m), c_i(-m),\ m\in\mathbb{Z}_{>0}, i=1,\dots,n\right\}.$$

The fields b_i, c_i can be identified as formal Laurent series acting on $\mathcal{SF}(d)$.

$$b_i(x) = \sum_{n\in\mathbb{Z}} b_i(n)x^{-n-1}, \quad c_i(x) = \sum_{n\in\mathbb{Z}} c_i(n)x^{-n-1}$$

The vertex algebra $\mathcal{SF}(d)$ has the following Virasoro element of central charge $c=-2d$:

$$\omega_{\mathcal{SF}(d)} = \sum_{i=1}^{d} :b_ic_i:.$$

Let $L(z) = Y(\omega_{\mathcal{SF}(d)},z)$. There is a charge operator $J\in \text{End}(\mathcal{SF}(d))$ such that

$$[J,b_i(n)] = b_i(n), \quad [J,c_i(n)] = -c_i(n)$$

which defines on $\mathcal{SF}(d)$ the $\mathbb{Z}$–gradation:

$$\mathcal{SF}(d)=\sum_{\ell\in\mathbb{Z}}\mathcal{SF}(d)^{(\ell)},\quad \mathcal{SF}(d)^{(\ell)}=\{v\in\mathcal{SF}(d)\mid Jv=\ell v\}.$$

Let us recall few known facts on the vertex algebra $\mathcal{SF}(d)$:

- The automorphism group of $\mathcal{SF}(d)$ is $Sp(2d,\mathbb{C})$ (cf. [1]) and the Lie algebra $\mathfrak{g}=\mathfrak{sp}(2d)$ acts on $\mathcal{SF}(d)$ by derivations.
- The vertex algebra $\mathcal{SF}(d)^{GL(d,\mathbb{C})}$ is a simple $\mathcal{W}$–algebra of type $W(2,3,\cdots,2d+1)$ (cf. [14], [8], [23]). In particular:
- The vertex algebra $\mathcal{SF}(1)^{GL(1)}$ is isomorphic to the singlet vertex algebra $\mathcal{M}(2)$ of central charge $c=-2$ (cf. [30]).
- The vertex algebra $\mathcal{SF}(2)^{GL(2)}$ is isomorphic to the parafermion vertex algebra $N_{-1}(\mathfrak{sl}(2))$.
- The vertex algebra $\mathcal{SF}(3)^{GL(3)}$ is isomorphic to the parafermion vertex algebra of the Breshadsky-Polykov vertex algebra $W_k(\mathfrak{sl}(3),f_{min})$ at level $k=-5/2$.
- The vertex algebra $\mathcal{SF}(d)^{Sp(2d,\mathbb{C})}$ is isomorphic to the simple principal affine W-algebra $W_k(\mathfrak{sp}(2d),f_{pr})$ at level $k=-d-1/2$ (and central charge $c=-2d$). It is freely generated by fields:

$$W^m(z)=\frac{1}{(m-2)!}\sum_{i=1}^{d}\big(:b_i(z)\partial_z^{m-2}c_i(z):+:\partial_z^{m-2}b_i(z)c_i(z):\big),\ m=2,4,\dots,2d.$$

- $\mathcal{SF}(d)$ is a completely reducible as $W_k(\mathfrak{sp}(2d),f_{pr})\times\mathfrak{sp}(2d)$–modules have

$$\mathcal{SF}(d)\cong\bigoplus_{\mu\in P_+}V_{\mathfrak{sp}(4)}(\mu)\otimes E_\mu \tag{2.2}$$

where E_μ is an irreducible $W_k(\mathfrak{sp}(4))$–module. The character of E_μ is given in [14]:

$$\mathrm{ch}[E_\mu]=\frac{q^{m^2+\frac{n^2}{2}+mn+m+\frac{n}{2}}(1-q^{m+1})(1-q^{n+1})(1-q^{m+n+2})(1-q^{2m+n+3})}{(q;q)_\infty^2}, \tag{2.3}$$

where $\mu=n\omega_1+m\omega_2\in P_+$.

- Assume that G is any reductive Lie subgroup of $Sp(2d,\mathbb{C})$. Then the orbifold vertex algebra $\mathcal{SF}(d)^G$ is completely reducible as $W_k(\mathfrak{sp}_{2d},f_{pr})\times G$–module:

$$\mathcal{SF}(d)^G\cong\bigoplus_{\mu\in P_+}V_{\mathfrak{sp}(4)}(\mu)^G\otimes E_\mu. \tag{2.4}$$

- Let $G_0=SL(2,\mathbb{C})\times\cdots\times SL(2,\mathbb{C})\subset Sp(2d,\mathbb{C})$. Then

$$\mathcal{SF}(d)^{G_0}=L(-2,0)^{\otimes d}.$$

3. Weyl modules for $W_k(\mathfrak{sp}(4))$

Let α_1 and α_2 denote the positive simple roots of $\mathfrak{sp}(4)$ with normalization

$$(\alpha_1,\alpha_1)=1,\ (\alpha_2,\alpha_2)=2,\ (\alpha_1,\alpha_2)=-1.$$

Let P_+ be the set of dominant integral weights for $\mathfrak{g}=\mathfrak{sp}(4)$. Let

$$\omega_1=\alpha_1+\frac{1}{2}\alpha_2,\omega_2=\alpha_1+\alpha_2$$

denote the fundamental dominant weights. For $\mu\in P_+$, let $V(\mu)$ be the irreducible, finite-dimensional $\mathfrak{g}$–module with highest weight μ. Let P_+^{even} be the subset of P_+ give by

$$P_+^{even}=\{r\omega_1+s\omega_2|\ r,s\in 2\mathbb{Z}_{\geq 0}.\}$$

Let $\mathcal{T}_{\mu,0}^{k+3}$ denotes that $W_k(\mathfrak{sp}(4))$–module $H_{DS}(L_k(\mu))$ as defined in [9].

Proposition 3.1. *For $\lambda=n\omega_1+m\omega_2\in P^+$ we have*

$$\mathrm{ch}[T_{\lambda,0}^{k+3}](q)=$$
$$\frac{q^{m^2+\frac{n^2}{2}+mn+m+\frac{n}{2}}(1-q^{m+1})(1-q^{n+1})(1-q^{m+n+2})(1-q^{2m+n+3})}{(q;q)_\infty^2}.$$

Proof. According to Arakawa-Frenkel [9],

$$\mathrm{ch}[T_{\lambda,0}^{k+3}](q)=\frac{q^{\tilde{\Delta}_{\lambda,0}^{\frac{1}{2}}}}{(q;q)_\infty^2}\sum_{w\in W}(-1)^{\ell(w)}q^{-\langle w(\lambda+\rho),\rho^\vee\rangle}$$

where

$$\tilde{\Delta}_{\lambda,0}^{\frac{1}{2}}=(\lambda,\lambda+2\rho)+\langle\rho,\rho^\vee\rangle$$

Plugging in $\lambda=n\omega_1+m\omega_2$ immediately gives

$$(\lambda,\lambda+2\rho)=m^2+mn+\frac{n^2}{2}+3m+2n,\ \langle\rho,\rho^\vee\rangle=\frac{7}{2}$$
$$\sum_{w\in W}(-1)^{\ell(w)}q^{-\langle w(\lambda+\rho),\rho^\vee\rangle}$$
$$=q^{-\frac{7}{2}-2m-\frac{3}{2}n}(1-q^{m+1})(1-q^{n+1})(1-q^{m+n+2})(1-q^{2m+n+3}),$$

which proves the formula. ∎

Conjecture 3.2. *Let $\kappa=1/2$. Then $T_{\mu,0}^{\kappa}\cong E_\mu$.*

Proposition 3.1 and the character formula for E_μ from [14] imply that this conjecture is true at the level of characters.

4. Structure of $N_{-1}(\mathfrak{sl}(2))$ and $N_{-1}(\mathfrak{sl}(2))^+$

In this section we present the decomposition of parafermion vertex algebra $N_{-1}(\mathfrak{sl}(2))$ and its $\mathbb{Z}_2$–orbifold $N_{-1}(\mathfrak{sl}(2))^+$ as a $W^{-5/2}(\mathfrak{sp}(4))$–module.

4.1. *Structure of $N_{-1}(\mathfrak{sl}(2))$.* We need the following result which easily follows from [22, Section 3].

Lemma 4.1. *$V(\lambda)^{GL(2)}$ is at most 1-dimensional. Moreover, $\dim V(\lambda)^G = 1$ if and only if $\lambda \in P_+^{even}$.*

Proof. We use the branching rules formula for the restriction $GL(n) \subset SP(2n)$ in Subsection 2.3.2 of [22], in the special case $n = 2$. Then for every dominant integral weight λ, the trivial representation appears in the decomposition of $SP(4)$–module $V(\lambda)$ as $GL(2)$–module if and only if $\lambda \in P_+^{even}$ and then multiplicity is one. □

Using Lemma 4.1 and the decomposition (2.4) we get:

Proposition 4.2. $N_{-1}(\mathfrak{sl}(2)) = \bigoplus_{\mu \in P_+^{even}} E_\mu$.

4.2. *Structure of $N_{-1}(\mathfrak{sl}(2))^+$.* $N_k(\mathfrak{sl}(2))$ has an involution θ induced by Chevalley's involution of $\mathfrak{sl}(2)$. It acts on the standard generators as follows: $e \to f$, $f \to e$, and $h \to -h$. This automorphism θ is uniquely determined by $\theta(W_3) = -W_3$, where W_3 is the weight 3 primary generator of $N_k(\mathfrak{sl}(2))$. We focus on the generic case when $V_k(\mathfrak{sl}(2)) = V^k(\mathfrak{sl}(2))$, which holds true for $k = -1$. The fixed point $\mathfrak{sl}_2$-algebra under this automorphism is denoted as $V_k(\mathfrak{sl}(2))^+$, and the fixed point parafermion (sub)algebra is denoted as $N_k(\mathfrak{sl}(2))^+$. Similarly, $V_k(\mathfrak{sl}_2)^-$ and $N_k(\mathfrak{sl}(2))^-$ represent their (-1)-eigenspaces. Additionally, $\hat{\mathfrak{h}}$ refers to the Heisenberg Lie algebra associated with $\mathbb{C}h$, where $\langle h, h\rangle = 2$, and $M(1)$ is the Heisenberg vertex superalgebra contained in $V_k(\mathfrak{sl}(2))$.

Theorem 4.3. *For any generic k, we have the following character formula:*

$$\mathrm{ch}[N_k(\mathfrak{sl}(2))^+](q) = \frac{\sum_{n\geq 1}(-1)^n q^{n(n+1)/2} + \sum_{n\geq 0}(-1)^n q^{n^2}}{(q;q)_\infty^2}.$$

Proof. Denote by $V_k(\mathfrak{sl}(2))(0)$ the zero weight subalgebra of $V_k(\mathfrak{sl}(2))$ under the h-action. Then $V_k(\mathfrak{sl}(2))(0) = M(1) \otimes N_k(\mathfrak{sl}(2))$. The zero weight space is spanned by the monomials:

$$h(-i_1)\cdots h(-i_m)e(-j_1)\cdots e(-j_n)f(-k_1)\cdots f(-k_n)\mathbf{1}.$$

Then writing generating series for the fixed point algebra gives

(4.1)

$$\mathrm{ch}[V_k(\mathfrak{sl}(2))(0)] = \frac{1}{(q;q)_\infty}\sum_{n\geq 0}\left(\frac{q^n}{(q)_n}\right)^2 = \mathrm{CT}_x \frac{1}{(q;q)_\infty (qx;q)_\infty (qx^{-1};q)_\infty}$$

We get decompositions:

$$V_k(\mathfrak{sl}(2))(0)^+ = M(1)^+ \otimes N_k(\mathfrak{sl}(2))^+ \oplus M(1)^- \otimes N_k(\mathfrak{sl}(2))^-, \tag{4.2}$$

$$V_k(\mathfrak{sl}(2))(0)^- = M(1)^+ \otimes N_k(\mathfrak{sl}(2))^- \oplus M(1)^- \otimes N_k(\mathfrak{sl}(2))^+. \tag{4.3}$$

We already know

$$\mathrm{ch}[M(1)^\pm] = \frac{1}{2}\left(\frac{1}{(q;q)_\infty} \pm \frac{1}{(-q;q)_\infty}\right) \tag{4.4}$$

To compute $V_k(\mathfrak{sl}(2))(0)^+$ we first observe that the trace can be computed on the associated graded algebra $\mathrm{gr}(V_k(\mathfrak{sl}(2))(0))$ which is slightly more convenient due to commutativity. For this computation we use again

$$v := h(-i_1)\cdots h(-i_m)e(-j_1)\cdots e(-j_n)f(-k_1)\cdots f(-k_n)\mathbf{1} \tag{4.5}$$

Observe that the automorphism θ maps v to

$$(-1)^m h(-i_1)\cdots h(-i_m)f(-j_1)\cdots f(-j_n)e(-k_1)\cdots e(-k_n)\mathbf{1}.$$

To compute the character we need

$$\mathrm{ch}[V_k(\mathfrak{sl}(2))(0)^\pm] = \frac{1}{2}\mathrm{ch}[V_k(\mathfrak{sl}(2))(0)] \pm \frac{1}{2}\mathrm{tr}_{V_k(\mathfrak{sl}(2))(0)}\theta q^{L(0)}. \tag{4.6}$$

Notice that the last trace computed on the set of monomials (4.5) is non-trivial if and only if $i_1 = j_1, \ldots, j_n = k_n$. Counting monomials contributing to non-zero trace gives

$$\mathrm{tr}_{V_k(\mathfrak{sl}(2))(0)}\theta q^{L(0)} = \frac{1}{(-q;q)_\infty (q^2;q^2)_\infty}.$$

Using this formula combined with (4.6) and plugging into character formulas for (4.2)-(4.3) gives a 2×2 linear system for $\mathrm{ch}[N_k(\mathfrak{sl}(2))^\pm]$. It's easy to see that

$$\mathrm{ch}[N_k(\mathfrak{sl}_2)^+] = \frac{\mathrm{ch}[V_k(\mathfrak{sl}(2))(0)^+]\mathrm{ch}[M(1)^+] - \mathrm{ch}[V_k(\mathfrak{sl}(2))(0)^-]\mathrm{ch}[M(1)^-]}{\mathrm{ch}[M(1)^+]^2 - \mathrm{ch}[M(1)^-]^2}$$

Using again (4.6) and (4.4) quickly gives:

$$\begin{aligned}
&\mathrm{ch}[N_k(\mathfrak{sl}(2))^+] \\
&= (q^2;q^2)_\infty \left(\frac{1}{2}\left(\frac{1}{(q;q)_\infty} + \frac{1}{(-q;q)_\infty}\right)\cdot\left(\frac{1}{2}\mathrm{ch}[V_k(\mathfrak{sl}(2))(0)] + \frac{1}{2}\frac{1}{(-q;q)_\infty(q^2;q^2)_\infty}\right)\right. \\
&\left. - \frac{1}{2}\left(\frac{1}{(q;q)_\infty} - \frac{1}{(-q;q)_\infty}\right)\cdot\left(\frac{1}{2}\mathrm{ch}[V_k(\mathfrak{sl}(2))(0)] - \frac{1}{2}\frac{1}{(-q;q)_\infty(q^2;q^2)_\infty}\right)\right) \\
&= \frac{1}{2}\frac{(q^2;q^2)_\infty}{(-q;q)_\infty}\mathrm{ch}[V_k(\mathfrak{sl}(2))(0)] + \frac{1}{2}\frac{1}{(q^2;q^2)} \\
&= \frac{1}{2}(q;q)_\infty \mathrm{ch}[V_k(\mathfrak{sl}(2))(0)] + \frac{1}{2}\frac{1}{(q^2;q^2)},
\end{aligned}$$

as claimed. To prove the second formula observe that we can express the character of $N_k(\mathfrak{sl}(2))$ using false theta series in the form

$$\frac{1}{2}\left(\frac{1+2\sum_{n\geq 1}(-1)^n q^{n(n+1)/2}}{(q;q)_\infty^2}+\frac{(q;q^2)_\infty(q;q)_\infty}{(q;q)_\infty^2}\right)$$

$$=\frac{1}{(q;q)_\infty^2}\left(\frac{1}{2}+\sum_{n\geq 1}(-1)^n q^{n(n+1)/2}+\frac{1}{2}\sum_{n\in\mathbb{Z}}(-1)^n q^{n^2}\right)$$

$$=\frac{1}{(q;q)_\infty^2}\left(\sum_{n\geq 1}(-1)^n q^{n(n+1)/2}+\sum_{n\geq 0}(-1)^n q^{n^2}\right),$$

where in the penultimate line we used the Jacobi triple product identity.

□

The previous theorem has the following generalization: let $\mathfrak{g}$ be a simple Lie algebra and $N_k(\mathfrak{g})$ the associated parafermion algebras. Then

$$\mathrm{ch}[N_k(\mathfrak{g})^+]=\frac{1}{2}\mathrm{ch}[N_k(\mathfrak{g})]+\frac{1}{2}\frac{\left(\sum_{n\in\mathbb{Z}}(-1)q^{n^2}\right)^m}{(q;q)_\infty^{2m}}$$

where m is the number of positive roots of $\mathfrak{g}$.

The following result concerning q-series is independent of representation theory.

PROPOSITION 4.4. *We have the following identities:*

$$1+2\sum_{n\geq 1}(-1)^n q^{n(n+1)/2}$$

(4.7)

$$=\sum_{\substack{m\in 2\mathbb{Z}_{\geq 0}\\ n\in 2\mathbb{Z}_{\geq 0}}} q^{m^2+\frac{n^2}{2}+mn+m+\frac{n}{2}}(1-q^{m+1})(1-q^{n+1})(1-q^{m+n+2})(1-q^{2m+n+3}),$$

$$\sum_{n\geq 1}(-1)^n q^{n(n+1)/2}+\sum_{n\geq 0}(-1)^n q^{n^2}$$

(4.8)

$$=\sum_{\substack{m\in 2\mathbb{Z}_{\geq 0}\\ n\in 4\mathbb{Z}_{\geq 0}}} q^{m^2+\frac{n^2}{2}+mn+m+\frac{n}{2}}(1-q^{m+1})(1-q^{n+1})(1-q^{m+n+2})(1-q^{2m+n+3}).$$

PROOF. We prove the first identity only, the second identity can be derived in a similar manner. To do this, we first perform the substitutions $m\to 2m$ and $n\to 2n$ on the right-hand side of (4.7), which allows us to rewrite the summations as over $n\geq 0$ and $m\geq 0$. Next, we simplify the

exponent $4m^2+4mn+2n^2+2m+n$ by completing the square, obtaining $2(n+m)^2+2m^2+(n+m)+m$, and then let $n+m\to n$. Expanding terms in parentheses of (4.7) and completing squares in the exponents gives:

$$\sum_{n\geq 0}\sum_{m=0}^{n} q^{2n^2+2m^2+m+n}(1-q^{m+1})(1-q^{n-m+1})(1-q^{n+2})(1-q^{n+m+3})$$

$$= \sum_{(a,b)\in S_+}\sum_{n\geq 0}\sum_{m=0}^{n} q^{2(n+a)^2+2(m+b)^2+(n+a)+(m+b)}$$

$$- \sum_{(a,b)\in S_-}\sum_{n\geq 0}\sum_{m=0}^{n} q^{2(n+a)^2+2(m+b)^2+(n+a)+(m+b)},$$

where $S_+=\{(0,0),(\frac{1}{2},1),(1,-\frac{1}{2}),(\frac{3}{2},\frac{1}{2})\}$ and $S_-=\{(0,\frac{1}{2}),(\frac{1}{2},-\frac{1}{2}),(1,1),(\frac{3}{2},0)\}$ are shift vectors for the summations variables. Next we pair elements from S_+ with S_- so that differences between shift vectors are integral: $(0,0)$ with $(1,1)$, $(1,-\frac{1}{2})$ with $(0,\frac{1}{2})$, $(\frac{3}{2},\frac{1}{2})$ with $(\frac{1}{2},-\frac{1}{2})$, and $(\frac{1}{2},1)$ with $(\frac{3}{2},0)$. This pairing results in cancellation of terms among the corresponding double sums:

$$\sum_{n\geq 0}\sum_{m=0}^{n} q^{2n^2+2m^2+n+m} - \sum_{n\geq 0}\sum_{m=0}^{n} q^{2(n+1)^2+2(m+1)^2+(n+1)+(m+1)}$$

$$= \sum_{n\geq 0}\sum_{m=0}^{n} q^{2n^2+2m^2+n+m} - \sum_{n\geq 1}\sum_{m=1}^{n+1} q^{2n^2+2m^2+n+m} = \sum_{n\geq 0} q^{2n^2+n}.$$

Similarly,

$$\sum_{n\geq 0}\sum_{m=0}^{n} q^{2(n+1)^2+2(m-\frac{1}{2})^2+(n+1)+(m-\frac{1}{2})} - \sum_{n\geq 0}\sum_{m=0}^{n} q^{2n^2+2(m+\frac{1}{2})^2+n+(m+\frac{1}{2})}$$

$$= \sum_{n\geq 1} q^{2n^2+n} - \sum_{n\geq 1} q^{n^2},$$

$$\sum_{n\geq 0}\sum_{m=0}^{n} q^{2(n+\frac{3}{2})^2+2(m+\frac{1}{2})^2+(n+\frac{3}{2})+(m+\frac{1}{2})} - \sum_{n\geq 0}\sum_{m=0}^{n} q^{2(n+\frac{1}{2})^2+2(m-\frac{1}{2})^2+(n+\frac{1}{2})+(m-\frac{1}{2})}$$

$$= -\sum_{n\geq 0} q^{(2n+1)(n+1)},$$

$$\sum_{n\geq 0}\sum_{m=0}^{n} q^{2(n+\frac{1}{2})^2+2(m+1)^2+(n+\frac{1}{2})+(m+1)} - \sum_{n\geq 0}\sum_{m=0}^{n} q^{2(n+\frac{3}{2})^2+2m^2+(n+\frac{3}{2})+m}$$

$$= \sum_{n\geq 1} q^{(n+1)^2} - \sum_{n\geq 1} q^{(2n+1)(n+1)}.$$

Adding these four identities proves the assertion (4.7).

□

Based on the previous result and formula (2.3), we get:

THEOREM 4.5. *With $\kappa = \frac{1}{2}$ and $\mu = n\omega_1 + m\omega_2$ as before, we have*

$$N_{-1}(\mathfrak{sl}(2))^+ = \sum_{\substack{m\in 2\mathbb{Z}_{\geq 0}\\ n\in 4\mathbb{Z}_{\geq 0}}} E_\mu. \tag{4.9}$$

PROOF. Proposition 4.4 implies that

$$\mathrm{ch}[N_{-1}(\mathfrak{sl}(2))^+] = \sum_{\substack{m\in 2\mathbb{Z}_{\geq 0}\\ n\in 4\mathbb{Z}_{\geq 0}}} \mathrm{ch}[E_\mu]. \tag{4.10}$$

Since we know that $N_{-1}(\mathfrak{sl}(2))^+ \subset N_{-1}(\mathfrak{sl}(2)) \subset \mathcal{SF}(2)$ is a completely reducible $W^{-5/2}(\mathfrak{sp}(4))$–module, then Proposition 4.2 implies that

$$N_{-1}(\mathfrak{sl}_2)^+ = \sum_{\substack{m\in 2\mathbb{Z}_{\geq 0}\\ n\in 2\mathbb{Z}_{\geq 0}}} a(n,m)E_\mu,$$

where $a(n,m) \in \{0,1\}$ are multiplicities with $a(0,0) = 1$.

Observe that for $n \equiv 2 \mod 4$ we have

$$\mathrm{ch}[E_\nu] = q^{a_\nu}(1 + O(q)), \qquad \alpha_\nu \in 2\mathbb{N} - 1,$$

while for $n \equiv 0 \mod 4$ we have

$$\mathrm{ch}[E_\mu] = q^{a_\mu}(1 + O(q)), \quad a_\mu \in 2\mathbb{N},$$

so lowest conformal weights have *different* parity if n are incongruent modulo 4.

Let us reparametrize all lowest conformal weights with $n \equiv 0 \mod 4$ as $\{\mu_i\}_{i\geq 0}$ such that $a_{\mu_0} \leq a_{\mu_1} \leq a_{\mu_2} \leq \cdots$. Clearly $a_{\mu_0} = 0$. Similarly we reparametrize all lowest conformal weights with $n \equiv 2 \mod 4$ as $\{\nu_i\}_{i\geq 0}$ such that $a_{\nu_1} \leq a_{\nu_2} \leq a_{\nu_3} \leq \cdots$.

Claim: $a(n,m) = 1$ for $n \equiv 0 \mod 4$ and $a(n,m) = 0$ for $n \equiv 2 \mod 4$.

To prove this claim, we will demonstrate that the right-hand side of (4.10) is the only possible representation of the character of $\mathrm{ch}[N_{-1}(sl_2)^+]$. In other words if

$$\mathrm{ch}[N_{-1}(\mathfrak{sl}(2))^+] = \sum_{\substack{m\in 2\mathbb{Z}_{\geq 0}\\ n\in 2\mathbb{Z}_{\geq 0}}} a(n,m)\mathrm{ch}[E_\mu]. \tag{4.11}$$

we will prove that $a(n,m)$ are as claimed. By checking the initial terms in the q-expansion we se that only E_{μ_i} (with $n \equiv 0 \mod 4$) contribute to the character. Notice also that for every k such that $a_{\mu_k} > a_{\mu_{k-1}}$ from (4.10) we get a congruence

$$\mathrm{ch}[N_{-1}(\mathfrak{sl}(2))^+] \equiv \mathrm{ch}[E_{\mu_0}] + \cdots + \mathrm{ch}[E_{\mu_{k-1}}] \mod (q^{a_{\mu_k}}), \tag{4.12}$$

because all coefficients up to $q^{a_{\mu_k}}$ agree with the character of $N_{-1}(\mathfrak{sl}(2))^+$.

Suppose the aforementioned claim is false. Then we can find a decomposition with the smallest $k > 1$ in which E_{μ_k} does not appear in the character decomposition. We can express it as follows

$$\mathrm{ch}[N_{-1}(\mathfrak{sl}(2))^+] = \mathrm{ch}[E_{\mu_0}] + \cdots + \mathrm{ch}[E_{\mu_{k-1}}] + \widehat{\mathrm{ch}[E_{\mu_k}]} + \mathrm{ch}[E_{\nu_j}] + \cdots ,$$

where E_{ν_j} is the first module with $n \equiv 2 \mod 4$ that appears in the decomposition and $\widehat{\cdot}$ indicates that the term is omitted. Assume first that $\mu_k > \mu_{k-1}$. Then we clearly cannot have $a_{\nu_j} < a_{\mu_k}$ because it would contradict (4.12). Therefore we must have $a_{\nu_j} = a_{\mu_k}$. But this would contradict the fact that a_{ν_i} and a_{μ_k} have different parity. If $\mu_{k-1} = \mu_k$ then again we would require $\mu_k = \nu_j$, a contradiction. □

Using the theorem and the fact that $N_{-1}(\mathfrak{sl}(2))^+$ is generated by primaries of degrees $2, 4, 6, 8, 10$ [23], we can determine that the first non-trivial occurrence arises at degree 14.

Remark 4.6. The approach to Theorem 4.3 can be facilitated using a result established with Wang in [6]. In that paper, we demonstrated the following decomposition:

$$N_{-\frac{3}{2}}(\mathfrak{sl}(2)) = \bigoplus_{m\geq 0} L(-10, 2m(m-1), 0) \tag{4.13}$$

where $L(-10, 2m(m-1), 0)$ denotes irreducible (Weyl) modules for the affine W-algebra $W_k(\mathfrak{sl}(3))$, with $k = -\frac{5}{2}$. By employing the explicit construction described in [6], we observe that each module in the aforementioned decomposition remains invariant under θ. Consequently, in order to compute $\mathrm{ch}[N_{-\frac{3}{2}}(\mathfrak{sl}(2))^+]$, it suffices to determine $\mathrm{ch}[L(-10, 2m(m-1), 0)^+]$. To achieve this, we rely on a BGG-type resolution for $L(-10, 2m(m-1), 0)$ as outlined in [9]. We assume the applicability of the approach in [9] to our modules, allowing us to obtain the following BGG-type resolution of the irreducible module $L(-10, 2m(m-1), 0)$ using Verma modules:

$$0 \to M(2m(m+1)) \to M(2m(m+\frac{1}{2}))^{\oplus 2} \to M(2m(m-\frac{1}{2}))^{\oplus 2} \to M(2m(m-1)) \to 0.$$

Considering that θ induces $\alpha_1 \leftrightarrow \alpha_2$ for simple roots, we observe that the two direct summands in the resolution also interchange under θ. Utilizing this fact, we can establish $\mathrm{ch}[L(-10, 2m(m-1), 0)^+] = \frac{q^{2m(m-1)}(1-q^m)^2(1-q^{2m})}{(q;q)_\infty^2}$. By summing over m, we then establish the claim presented in Theorem 4.3.

5. The vertex algebra $\mathcal{M}(2)^{\otimes 2}$ as $N_{-1}(\mathfrak{sl}(2))$–module.

Our first result uses our previous work [4].

THEOREM 5.1. *We have:*

$$\mathcal{M}(2)^{\otimes 2} = \bigoplus_{s=0}^{\infty} N_{-1}(2s).$$

PROOF. By [4], $\mathcal{M}(2)^{\otimes 2}$ is isomorphic to a parafermion algebra of a charge zero component of two copies of $\beta\gamma$ vertex algebra which is exactly algebra denoted by $\mathcal{V}_0^{(1)}$ in [5]. Using decomposition

$$\mathcal{V}_0^{(1)} = \bigoplus_{s=0}^{\infty} L_{-1}(2s\omega_1),$$

and same arguments as in [6], we get $\mathcal{M}(2)^{\otimes 2} = \bigoplus_{s=0}^{\infty} N_{-1}(2s)$. □

The character of $\mathcal{M}(2)^{\otimes 2}$ appears as the constant term of the Schur's index of type (A_1, D_2) (here $D_2 = A_1 \times A_1$).

COROLLARY 5.2. *We have*

$$\mathrm{ch}[\mathcal{M}(2)^{\otimes^2}](q) = \frac{\sum_{n_1 \geq 0, n_2 \in \mathbb{Z}} \mathrm{sgn}(n_2)(-1)^{n_1} q^{\frac{n_1(n_1+1)}{2} + n_1 n_2 + n_2^2 + n_2}}{(q;q)_\infty^2}.$$

PROOF. Note that (see [12] for instance):

$$\mathrm{ch}[\mathcal{M}(p)](q) = \frac{1}{(q;q)_\infty} \sum_{n \in \mathbb{Z}} \mathrm{sgn}(n) q^{2n^2+n} = (q;q)_\infty \sum_{k=0}^{\infty} \frac{q^k}{(q)_k^2}. \tag{5.1}$$

We also have:

$$\begin{aligned} \mathrm{ch}[N_{-1}(2s)](q) &= q^{s(s+1)} \mathrm{CT} \frac{(x^{-s} + \cdots + 1 + \cdots + x^s)}{(xq;q)_\infty (x^{-1}q;q)_\infty} \\ &= \frac{q^{s(s+1)} \left(\Phi_0(q) + \Phi_{-1}(q) - 2\Phi_{-s-1}(q)\right)}{(q;q)_\infty^2}. \end{aligned}$$

$$\begin{aligned}
\mathrm{ch}[\mathcal{M}(2)](q)^2 &= \sum_{s=0}^{\infty} q^{s(s+1)} \mathrm{CT}_x \frac{(x^{-s}+\cdots+1+\cdots+x^s)}{(xq;q)_\infty (x^{-1}q;q)_\infty} \\
&= \mathrm{CT}_x \frac{\sum_{s=0}^{\infty} \frac{x^{s+1/2}-x^{-s-1/2}}{x^{1/2}-x^{-1/2}} q^{s(s+1)}}{(xq;q)_\infty (x^{-1}q;q)_\infty} \\
&= \frac{1}{(q;q)_\infty^2} \sum_{m\in\mathbb{Z}} \sum_{s\geq |m|} q^{s(s+1)} \left(\Phi_m(q) - \Phi_{m-1}(q)\right) \\
&= \frac{1}{(q;q)_\infty^2} \Big(\sum_{n_1,n_2\geq 0} (-1)^{n_1} q^{\frac{n_1(n_1+1)}{2}+n_1n_2+n_2^2+n_2} \\
&\quad - \sum_{n_1,n_2\geq 0} (-1)^{n_1} q^{\frac{n_1(n_1+1)}{2}-n_1(n_2+1)+n_2^2+n_2} \Big) \\
&= \frac{\sum_{n_1\geq 0, n_2\in\mathbb{Z}} \mathrm{sgn}(n_2) (-1)^{n_1} q^{\frac{n_1(n_1+1)}{2}+n_1n_2+n_2^2+n_2}}{(q;q)_\infty^2}.
\end{aligned}$$

□

Using the same arguments as in [6] we get:

COROLLARY 5.3. *$\mathcal{M}(2)^{\otimes 2}$ is generated by $N_{-1}(\mathfrak{sl}_2) + N_{-1}(2\omega_1)$. In other words, it is generated by $N_{-1}(\mathfrak{sl}_2)$ and a primary field W^2 of conformal weight 2.*

REMARK 5.4. This decomposition is an analog of the decomposition from [6] :

$$\mathcal{W}^0(2)_{A_2} = N_{-3/2}(\mathfrak{sl}(3)) = \bigoplus_{j=0}^{\infty} N_{-3/2}(2j).$$

6. S_2-PERMUTATION ORBIFOLD OF $\mathcal{M}(2)$

In this part we consider the S_2-permutation orbifold of $W^k(\mathfrak{sl}(3))$ of level k and central charge $c(k) = 2 - 24\frac{(k+2)^2}{k+3}$. We denote the usual generators of $W^k(\mathfrak{sl}(3))$ by T (Virasoro) and W (primary generator of degree 3) satisfying the usual OPE with central charge $c = c(k)$ (we will use parametrization by the central charge). We denote by $W_1 = W \otimes \mathbf{1}$, $W_2 = \mathbf{1} \otimes W$, and $T_p = T \otimes \mathbf{1} + \mathbf{1} \otimes T$, $T_m = T \otimes \mathbf{1} - \mathbf{1} \otimes T$, and we also let $W_p = W \otimes \mathbf{1} + \mathbf{1} \otimes W$ and $W_m = W \otimes \mathbf{1} - \mathbf{1} \otimes W$. Then $\mathcal{W}_c := W_c(sl(3))^{\otimes 2}$ is strongly and freely

generated by T_p, T_m, W_p and W_m. For brevity we introduce

$$U(a,b) :=: W_m^{(a)} W_m^{(b)} :$$
$$V(a,b) :=: T_m^{(a)} T_m^{(b} :$$
$$Z(a,b) :=: T_m^{(a)} W_m^{(b)} :$$

elements fixed by the S_2-automorphism switching tensor factors.

Next result was recently proven by M. Penn and one of us.

THEOREM 6.1. *[27] For all but finitely many values of c, which includes $c = -2$, the orbifold subalgebra $\mathcal{W}_c^{S_2}$ is strongly generated by the set*

$$\{T_p, W_p, U(0,0), U(2,0), U(4,0), V(0,0), V(2,0),$$
$$V(4,0), Z(0,0), Z(1,0), Z(2,0), Z(3,0)\}.$$

Moreover, this set is minimal and generators can be modified so that the orbifold is a W-algebra of type $(2,3,4,5,6^3,7,8^3,9)$.

6.1. *The S_2-orbifold of $\mathcal{M}(2)$.* We can further reduce the set of generators in the theorem by taking into account null vectors at central charge $c = -2$. A straightforward computation yields the following expressions (using OPE notation for simplicity):

$$v_{sing1} = -\frac{19}{54} : T'T' : -\frac{14}{27} : T''T : -\frac{16}{27} : TTT : + : WW : + \frac{4T^{(4)}}{81}$$
$$v_{sing2} = -\frac{3}{2} : T'W : + : TW' : - \frac{W^{(3)}}{8}$$

which are two linearly independent null vectors in $\mathcal{M}(2)$. Thus, they belong to the maximal ideal of $W^{-3/2}(\mathfrak{sl}(3))$. Applying the symmetrization map, the S_2-fixed vectors:

$$sv_{sing1} := v_{sing1} + \sigma(v_{sing1}), \quad sv_{sing2} := v_{sing1} + \sigma(v_{sing2}),$$

where σ is the non-trivial element in S_2, are now null vectors in $\mathcal{W}_{c=-2}^{S_2}$. This allows us to eliminate two generators $Z(3,0), V(2,0)$ from the set in Theorem 6.1 and keep only $U(2,0)$. Using descendants of sv_{sing1} and sv_{sing2} allows to eliminate two generators of degree 8 and also generators of degree 9. This keeps us with generators up to degree 8. We can now conclude

THEOREM 6.2. *The vertex algebra $(\mathcal{M}(2) \otimes \mathcal{M}(2))^{S_2}$ is a W-algebra of type $(2,3,4,5,6,7,8)$ with a minimal strong set of generators*

$$\{T_p, W_p, V(0,0), Z(0,0), V(2,0), Z(2,0), U(2,0)\}.$$

All generating vectors (except T_p) can be modified to be primary.

Of course this vertex algebra is not generated by the degree 3 generator W_p so it cannot be analyzed using universal $W_\infty[\lambda]$ algebra as in [26].

REMARK 6.3. One can prove Theorem 6.2 directly using symplectic fermion construction without going through Theorem 6.1 and singular vectors.

PROPOSITION 6.4. *The vertex algebra* $(\mathcal{M}(2)\otimes\mathcal{M}(2))^{S_2}$ *is completely reducible as* $N_{-1}(\mathfrak{sl}(2))$*–module with the following decomposition:*

$$(\mathcal{M}(2)\otimes\mathcal{M}(2))^{S_2}=\bigoplus_{j=0}^{\infty}N_{-1}(4j\omega_1). \tag{6.1}$$

PROOF. If we prove

$$\mathrm{ch}[(\mathcal{M}(2)\otimes\mathcal{M}(2))^{S_2}](q)=\sum_{j\geq 0}\mathrm{ch}[N_{-1}(4j\omega_1)](q). \tag{6.2}$$

it implies that (6.1) holds. This is because $N_{-1}(\mathfrak{sl}(2))$ is fixed under the automorphism group, and thus we have

$$(\mathcal{M}(2)\otimes\mathcal{M}(2))^{S_2}=\bigoplus_{j=0}^{\infty}a(2j)N_{-1}(2j\omega_1),$$

where $a(m)\in\{0,1\}$, and $a(0)=1$. Observe $\mathrm{ch}[N_{-1}(2j\omega_1)]=q^{j(j+1)}(1+O(q))$, so the lowest conformal weight of $N_{-1}(2j\omega_1)]$ is $j(j+1)$. If $a(4j)=0$ for some j, then because of (6.2), it is easy to see that the character $(\mathcal{M}(2)\otimes\mathcal{M}(2))^{S_2}$ agree with $\sum_{j\geq 0}a(2j)\mathrm{ch}[N_{-1}(2j\omega_1)]$.

We are left to prove relation (6.2). We require (2.1):

$$\mathrm{ch}[(\mathcal{M}(2)\otimes\mathcal{M}(2))^{S_2}]=\frac{1}{2}\mathrm{ch}[\mathcal{M}(2)](q)^2+\frac{1}{2}\mathrm{ch}[\mathcal{M}(2)](q^2).$$

We already know that

$$\frac{1}{2}\mathrm{ch}[\mathcal{M}(2)](q)^2=\frac{1}{(q)_\infty^2}\sum_{s\geq 0}q^{s(s+1)}\left(\frac{1}{2}-\Phi_{-s-1}(q)\right)$$

and it is not hard to see that

$$\frac{1}{2}\mathrm{ch}[\mathcal{M}(2)](q^2)=\frac{1}{2}\frac{\sum_{n\geq 0}(-1)^n q^{n(n+1)}}{(q^2;q^2)_\infty}=\frac{1}{2}\frac{\left(\sum_{n\geq 0}(-1)^n q^{n(n+1)}\right)\cdot\left(\sum_{n\in\mathbb{Z}}(-1)^n q^{n^2}\right)}{(q)_\infty^2}.$$

The right-hand side of (6.2) equals

$$\frac{1}{(q)_\infty^2}\sum_{s\geq 0}q^{2s(2s+1)}\left(1-2\Phi_{-2s-1}(q)\right).$$

To finish the proof we have to show that

$$-\sum_{s\geq 0}q^{2s(2s+1)}\Phi_{-2s-1}(q)+\sum_{s\geq 0}q^{(2s+1)(2s+2)}\Phi_{-2s-2}(q)$$

$$= \left(\sum_{n\geq 0}(-1)^n q^{n(n+1)}\right)\cdot\left(\sum_{n\geq 1}(-1)^n q^{n^2}\right),$$

or equivalently

$$\sum_{s,m\geq 0}(-1)^{s+m+1}q^{s(s+1)-(s+1)m+\frac{m^2+m}{2}} = \left(\sum_{n\geq 0}(-1)^n q^{n(n+1)}\right)\cdot\left(\sum_{n\geq 1}(-1)^n q^{n^2}\right).$$

To prove the last identity we rewrite the left-hand side as

$$\sum_{s,m\geq 0}(-1)^{s+m+1}q^{s(s+1)-(s+1)m+\frac{m^2+m}{2}} = \sum_{s,m\geq 0}(-1)^{s+m+1}q^{\left(\frac{m}{2}\right)^2+(s-\frac{m}{2})(s-\frac{m}{2}+1)},$$

and introduce let $t = s - m$, so that the summation is over m and t. Then it can be easily shown that the resulting double sum agrees with the one on the right-hand side. □

COROLLARY 6.5. *Vertex algebra $(\mathcal{M}(2)\otimes\mathcal{M}(2))^{S_2}$ is generated by $N_{-1}(\mathfrak{sl}(2)) + N_{-1}(4\omega_1)$. In particular, V is generated by $N_{-1}(\mathfrak{sl}(2))$ and a primary field W^6 of conformal weight* 6.

PROOF. From Theorem 6.2 and Proposition 6.4, we see that all generators of $(\mathcal{M}(2)\otimes\mathcal{M}(2))^{S_2}$ are within $N_{-1}(\mathfrak{sl}(2)) + N_{-1}(4\omega_1)$. Through direct computation we see that the S_2-orbifold subalgebra is generated by a primary vector of degree 6. However, any such vector necessarily belongs to $N_{-1}(\mathfrak{sl}(2)) + N_{-1}(4\omega_1)$. Hence, we can conclude our argument. □

6.2. *Further W-algebras and Schur's indices.* We use the decomposition from [5] (see also [3]):

$$\mathcal{V}_0^{(p)} = \bigoplus_{s=0}^{\infty} L_{-2+1/p}(2s\omega_1).$$

Let $\mathcal{U}^0(p) := \mathrm{Com}(M(1), \mathcal{V}_0^{(p)})$. The character of $\mathcal{U}^0(p)$ is given by the following result:

PROPOSITION 6.6. *We have:*

$$\mathrm{ch}[\mathcal{U}^0(p)] = \frac{\sum_{n_1\geq 0, n_2\in\mathbb{Z}}\mathrm{sgn}(n_2)(-1)^{n_1}q^{\frac{n_1(n_1+1)}{2}+n_1n_2+p(n_2^2+n_2)}}{(q;q)_\infty^2},$$

where $sgn(n) = 1$ for $n \geq 0$ and 0 otherwise.

It is not hard to see using the same approach as in [12] or [11]

PROPOSITION 6.7.

$$q^{\frac{2p+2}{24}}\mathrm{ch}[\mathcal{U}^0(p)] = \eta(\tau)^2\eta(p\tau)^2\cdot \mathrm{CT}_{\zeta_1,\zeta_2}\frac{\vartheta(z_1;p\tau)\vartheta(z_2;p\tau)\vartheta(z_1+z_2;p\tau)}{\vartheta(z_1;\tau)\vartheta(z_2;\frac{p}{2}\tau)\vartheta(z_1+z_2;\frac{p}{2}\tau)},$$

where

$$\vartheta(z;\tau) = -iq^{1/8}\zeta^{-1/2}(q;q)_\infty(\zeta;q)_\infty(\zeta^{-1}q;q)_\infty,$$

is the Jacobi theta function with $\zeta := e^{2\pi i y}$*, and* CT *denotes the constant term with respect to the Fourier expansion in* ζ_i*.*

We end with a conjecture that generalizes a character identity for $\mathrm{ch}[\mathcal{M}(2)^{\otimes^2}]$ from Section 3. Observe that Corollary 5.2 together with (5.1) gives

$$\frac{\sum_{n_1\geq 0, n_2\in\mathbb{Z}} \mathrm{sgn}(n_2)(-1)^{n_1} q^{\frac{n_1(n_1+1)}{2}+n_1n_2+(n_2^2+n_2)}}{(q;q)_\infty^2} = (q;q)_\infty^2 \sum_{n_1,n_2\geq 0} \frac{q^{n_1+n_2}}{(q)_{n_1}^2 (q)_{n_2}^2}.$$

Some clues from 4d/2d dualities in physics suggest that the following identity should hold (for $k \geq 0$):

$$\frac{\sum_{n_1\geq 0, n_2\in\mathbb{Z}} \mathrm{sgn}(n_2)(-1)^{n_1} q^{\frac{n_1(n_1+1)}{2}+n_1n_2+(k+1)(n_2^2+n_2)}}{(q;q)_\infty^2}$$
$$= (q)_\infty^{2k+2} \sum_{n_1,\dots,n_{2k+2}\geq 0} \frac{q^{\mathbf{n}\cdot A_{D_{2k+2}}\cdot \mathbf{n}^T+n_1+\cdots+n_{2k+2}}}{(q)_{n_1}^2 (q)_{n_2}^2 \cdots (q)_{n_{2k+2}}^2},$$

where $\mathbf{n} = (n_1, ..., n_{2k+2})$ and $A_{D_{2k+2}}$ is the adjacency matrix of the Dynkin diagram of type D_{2k+2} (for $k = 0$, we have $D_2 = A_1 \times A_1$, whose Dynkin diagram consists of two nodes with no edges).

7. The symmetric orbifold $(L(-2,0)\otimes L(-2,0))^{S_2}$

Let $\mathcal{SF}(d)$ be the vertex algebra of symplectic fermion. The symmetric group S_d acts naturally on $\mathcal{SF}(d)$.

Recall that $\mathrm{Aut}(\mathcal{SF}(d)) = Sp(2d, \mathbb{C})$. Let

$$G_0 = SL(2,\mathbb{C}) \times \cdots \times SL(2,\mathbb{C}).$$

The action of S_d and G_0 commutes, so we have the of the group G_0 acts on $(\mathcal{SF}(d))^{S_d}$.

Here we consider the case $d = 2$.

We use the decomposition

$$\mathcal{SF}(d) = \bigoplus_{\lambda\in P_+} V_{\mathfrak{sp}(4)}(\lambda)\otimes E_\lambda$$

where $V_{sp(4)}(\lambda)$ is irreducible finite-dimensional $sp(4)$–module, with highest weight λ, and E_λ is irreducible $W^{-5/2}(\mathfrak{sp}(4)) = (\mathcal{SF}(d))^{\mathfrak{sp}(4)}$–module. Next we notice that $\dim V_{sp(4)}(\lambda)^{G_0} \leq 1$, and $\dim V_{sp(4)}(\lambda)^{G_0} = 1$ if and only if $\lambda = m\omega_2$ for certain $m \in \mathbb{Z}_{\geq 0}$. (This result follows from [20] or [22]). This proves the first half of the following result.

Theorem 7.1. *We have*

$$L(-2,0)\otimes L(-2,0) = \bigoplus_{m=0}^{\infty} E_{m\omega_2}$$

$$(L(-2,0)\otimes L(-2,0))^{S_2}=\bigoplus_{m=0}^{\infty} E_{2m\omega_2},$$

PROOF. We only have to prove the second relation. Using (2.1) and the Jacobi triple product identity, it is easy to prove

$$\mathrm{ch}[(L(-2,0)\otimes L(-2,0))^{S_2}]=\frac{1}{2}\left(\frac{1}{(q^2;q)_\infty^2}+\frac{1}{(q^4;q^2)}\right)=\frac{(1-q)\sum_{n\geq 0}(-1)^n q^{n^2}}{(q;q)_\infty^2}$$

holds. Also, using

$$\mathrm{ch}[E_{2m\omega_1}]=\frac{q^{4m^2+2m}(1-q)(1-q^{m+1})(1-q^{m+2})(1-q^{2m+3})}{(q;q)_\infty^2}$$

one easily demonstrates that $\mathrm{ch}[(L(-2,0)\otimes L(-2,0))^{S_2}]=\sum_{m\geq 0}\mathrm{ch}[E_{2m\omega_1}]$. Therefore the second relation in the theorem holds at the level of characters. On the other hand, using the fact that $W^{-5/2}(sp(4))$ is fixed under the non-trivial element of S_2 we obtain decomposition

$$(L(-2,0)\otimes L(-2,0))^{S_2}=\bigoplus_{m=0}^{\infty} a(m)E_{m\omega_2},$$

where the multiplicities $a(m)\in\{0,1\}$, and $a(0)=1$. Therefore, it suffices to show that $a(2m-1)=0$ for all $m\geq 1$. It is easy to see that $a(1)=0$ and $a(2)=1$. Then we observe

$$\mathrm{Coeff}_{q^{4m^2-2m}}(q;q)_\infty^2\left(\bigoplus_{m=0}^{\infty} a(m)\mathrm{ch}[E_{m\omega_2}]\right)=a(2m-1)-a(2m-3).$$

But q^{4m^2-2m}, $m\geq 2$, does not appear as term in $(1-q)\sum_{n\geq 0}(-1)^n q^{n^2}$ because $4m^2-2m=n^2$ and $4m^2-2m=n^2+1$ does not have integral solutions except for $m=n=0$, and $m=n=1$, respectively. We conclude that $a(2m-1)=a(2m-3)$ for every $m\geq 2$, which together with $a(1)=0$ gives $a(2m-1)=0$ for every m and completes the proof. □

REMARK 7.2. *One can easily demonstrate that the aforementioned decomposition is essentially the only case in which a $W^k(\mathfrak{sp}(4))$-algebra can be embedded within the tensor product of two Virasoro vertex operator algebras $L(c_1,0)\otimes L(c_2,0)$. Specifically, aside from the case where $c_1=c_2=-2$, we can also observe two degenerate cases that arise due to the presence of singular vectors of degree 4: $c_1=0$ or $c_2=0$, and, $c_1=-22/5$ or $c_2=-22/5$.*

8. Conjectural singlet and triplet type W-algebras for $\mathfrak{sp}(4)$

In this section, we present a conjecture regarding the existence of a $\mathfrak{sp}(4)$ singlet and triplet type vertex algebra, based on the work of Feigin and Tipunin [18], [29] (see also [13]).

As previously mentioned, $V_{\mathfrak{sp}(4)}(\lambda)$ denoted an irreducible highest weight representation of $\mathfrak{sp}(4)$ of highest weight λ. We observe that for $\lambda \in P_+ \cap Q = 2\mathbb{Z}_{\geq 0}\omega_1 + \mathbb{Z}_{\geq 0}\omega_2$, the zero weight subspace $V_{\mathfrak{sp}(4)}(\lambda)_0$ is non-zero. Moreover, using the Weyl character formula we have:

$$\dim V_{\mathfrak{sp}(4)}(n\omega_1 + m\omega_2)_0 = 1 + \frac{m}{2} + \frac{n}{2} + \frac{mn}{2}, \quad n \in 2\mathbb{Z}_{\geq 0}, m \in 2\mathbb{Z}_{\geq 0}$$

and

$$\dim V_{\mathfrak{sp}(4)}(n\omega_1 + m\omega_2)_0 = \frac{(n+1)(m+1)}{2}, \quad n \in 2\mathbb{Z}_{\geq 0}, m \in 2\mathbb{Z}_{\geq 0} + 1.$$

For an even $p \geq 2$, we define two q-series:

$$S_p(q) := \sum_{m \in \mathbb{Z}_{\geq 0}, n \in 2\mathbb{Z}_{\geq 0}} \dim V_{\mathfrak{sp}(4)}(n\omega_1 + m\omega_2)_0 q^{\frac{p}{2}(m^2 + \frac{n^2}{2} + mn + 3m + 2n) - 2m - \frac{3n}{2}}$$
$$\times (1 - q^{m+1})(1 - q^{n+1})(1 - q^{m+n+2})(1 - q^{2m+n+3}).$$

and

$$T_p(q) := \sum_{m \in \mathbb{Z}_{\geq 0}, n \in 2\mathbb{Z}_{\geq 0}} \dim V_{\mathfrak{sp}(4)}(n\omega_1 + m\omega_2) q^{\frac{p}{2}(m^2 + \frac{n^2}{2} + mn + 3m + 2n) - 2m - \frac{3n}{2}}$$
$$\times (1 - q^{m+1})(1 - q^{n+1})(1 - q^{m+n+2})(1 - q^{2m+n+3}),$$

where

$$\dim V_{\mathfrak{sp}(4)}(n\omega_1 + m\omega_2) = \frac{(m+1)(n+1)(m+n+2)(2m+n+3)}{6}. \tag{8.1}$$

Conjecture 8.1. *There exist simple vertex algebras $W_{C_2}(p)^0$ and $W_{C_2}(p)$, of central charge $c = 86 - \frac{60}{p} - 30p$ whose characters are given by*

$$\frac{S_p(q)}{(q;q)_\infty^2} \quad \text{and} \quad \frac{T_p(q)}{(q;q)_\infty^2},$$

respectively.

Using [14, 19], it is not hard to see that for $p = 2$ two vertex algebras in question are $\mathcal{M}(2)^{\otimes^2} \hookrightarrow \mathcal{W}(2)^{\otimes^2}$ where $\mathcal{W}(2)$ is the $(1,2)$-triplet vertex algebra. For $p = 4$, we anticipate the existence of vertex algebras with central charge $c = -49$ and of types $(2, 4, 6, 9^2, 11)$ and $(2, 4, 6^5, 9^{10}, 11^5)$, respectively.

Regarding the modular properties of the proposed characters (after adding the $q^{-c/24}$ term) it is worth noting that by utilizing the properties of the Weyl group as described in [13], the T_p-series can be expressed as a summation over a full lattice, taking into account the number of Weyl chambers. Thus, we can represent $T_p(q) = \frac{1}{8}\sum_{m \in \mathbb{Z}, n \in 2\mathbb{Z}}(\cdot)$ (observe that (8.1) makes sense for all n and m). This summation corresponds to a collection of derivatives of rank two theta functions, whose modular properties have been thoroughly studied (see [13]). Consequently, this observation suggests that

$W_{C_2}(p)$ is expected to be *lisse*. (Non)-modular properties of $S_p(q)$ series are more complicated and can be accessed using the methods developed in [11].

Acknowledgements.

D.A. is partially supported by the QuantiXLie Centre of Excellence, a project cofinanced by the Croatian Government and European Union through the European Regional Development Fund - the Competitiveness and Cohesion Operational Programme (KK.01.1.1.01.0004).

A.M. received partial support from the Collaboration Grant for Mathematicians 709563 awarded by the Simons Foundation and the NSF grant DMS-2101844.

References

[1] T. Abe, *A $\mathbb{Z}_2$–orbifold model of the symplectic fermionic vertex operator superalgebra*, Math. Z. **255** (2007), 755–792

[2] D. Adamović, *Classification of irreducible modules of certain subalgebras of free boson vertex algebra*, J. Algebra **270** (2003), 115–132

[3] D. Adamović, *A realization of certain modules for the $N = 4$ superconformal algebra and the affine Lie algebra $A_2^{(1)}$*, Transform. Groups **21** (2016), 299–327.

[4] D. Adamović and A. Milas, *On some vertex algebras related to $V_{-1}(sl(n))$ and their characters*, Transform. Groups **26** (2021), 1–30.

[5] D. Adamović, T. Creutzig, N. Genra and J. Yang, *The vertex algebras $\mathcal{V}^{(p)}$ and $\mathcal{R}^{(p)}$*, Comm. Math. Phys. **383** (2021), 1207–1241.

[6] D. Adamović, A. Milas and Q. Wang, *On parafermion vertex algebras of $\mathfrak{sl}(2)$ and $\mathfrak{sl}(3)$ at level -3/2*, Commun. Contemp. Math. **24** (2022), no. 1, Paper No. 2050086, 23 pp.

[7] T. Arakawa, *Representation theory of W-algebras*, Invent. Math. **169** (2007), 219–320.

[8] T. Arakawa, T. Creutzig and A. Linshaw, *Cosets of Bershadsky-Polyakov algebras and rational $\mathcal{W}$-algebras of type A*, Selecta Math. (N.S.) **23** (2017), 2369–2395.

[9] T. Arakawa and E. Frenkel, *Quantum Langlands duality of representations of $\mathcal{W}$-algebras*, Compos. Math. **155** (2019), 2235–2262.

[10] T. Arakawa, C. H. Lam and H. Yamada, *Zhu's algebra, C_2-algebra and C_2-cofiniteness of parafermion vertex operator algebras*, Adv. Math. **264** (2014), 261–295.

[11] K. Bringmann, J. Kaszian, A. Milas and C. Nazaroglu, *Integral representations of rank two false theta functions and their modularity properties*, Res. Math. Sci. **8** (2021), no. 4, Paper No. 54, 31 pp.

[12] K. Bringmann, J. Kaszian, A. Milas and S. Zwegers, *Rank two false theta functions and Jacobi forms of negative definite matrix index*, Adv. in Appl. Math. **112** (2020), 101946, 19 pp.

[13] K. Bringmann and A. Milas, *W-algebras, higher rank false theta functions, and quantum dimensions*, Selecta Math. (N.S.) **23** (2017), 1249–1278.

[14] T. Creutzig and A. Linshaw, *Orbifolds of symplectic fermion algebras*, Trans. Am. Math. Soc. **369** (2017), 467–494.

[15] C. Dong, C. H. Lam, Q. Wang and H. Yamada, *The structure of parafermion vertex operator algebras*, J. Algebra **323** (2010), 371–381.

[16] C. Dong, C. H. Lam and H. Yamada, *W-algebras related to parafermion algebras*, J. Algebra **322** (2009), 2366–2403.

[17] J. Fasquel, *OPEs of rank two W-algebras*, arXiv:2210.15728.
[18] B. Feigin and I. Yu Tipunin, *Logarithmic CFTs connected with simple Lie algebras*, Preprint, arXiv:1002.5047 (2010).
[19] I. Flandoli and S. Lentner, *Logarithmic conformal field theories of type B_n, $\ell = 4$ and symplectic fermions*, J. Math. Phys. **59** (2018), no. 7, 071701, 35 pp.
[20] R. Goodman and N. R. Wallach, Symmetry, representations, and invariants, Grad. Texts in Math. **255**, Springer, Dordrecht, 2009.
[21] M. Gorelik and V. Kac, *On simplicity of vacuum modules*, Adv. Math. **211** (2007), 621–677.
[22] R. Howe, E.-C. Tan and J. F. Willenbring, *Stable branching rules for classical symmetric pairs*, Trans. Amer. Math. Soc. **357** (2005), 1601–1626.
[23] S. Kanade and A. Linshaw, *Universal two-parameter even spin W_∞-algebra*, Adv. Math. **355** (2019), 106774, 58pp.
[24] J. Lepowsky and M. Primc, Structure of the Standard Modules for the Affine Lie Algebra $A_1^{(1)}$, Contemp. Math., Vol. **46**, American Mathematical Soc., Providence, RI, 1985.
[25] J. Lepowsky and R. L. Wilson, *The structure of standard modules, I. Universal algebras and the Rogers-Ramanujan identities*, Invent. Math. **77** (1984), 199–290.
[26] A. Linshaw, *Universal two-parameter W_∞–algebra and vertex algebras of type $W(2, 3, \dots, N)$*, Compos. Math. **157** (2021), 12–82.
[27] A. Milas and M. Penn, 2-*permutation orbifolds of W-algebras*, submitted.
[28] A. Milas, M. Penn and C. Sadowski, *Permutation orbifolds of Virasoro vertex algebras and W-algebras*, J. Algebra **570** (2021), 267–296.
[29] S. Sugimoto, *On the Feigin-Tipunin conjecture*, Selecta Math. (N.S.) **27** (2021), no. 5, Paper No. 86, 43 pp.
[30] W. Wang, *$W_{1+\infty}$–algebra, W_3–algebra, and Friedan-Martinec-Shenker bosonization*, Comm. Math. Phys. **195** (1998), 95–111.

Logaritamske verteks algebre vezane za $\mathfrak{sp}(4)$

Dražen Adamović i Antun Milas

Sažetak. U članku navodimo nekoliko rezultata i slutnji vezanih za parafermionske verteks-algebre i s njima povezane logaritamske verteks-algebre. Krećemo od tenzorskog produkta dvije kopije singlet verteks-algebre $\mathcal{M}(2)$, te promatramo različite podalgebre koje se pojavljuju u njezinoj dekompoziciji, uključujući $N_{-1}(sl(2))$ i pripadni $\mathbb{Z}_2$-orbifold $N_{-1}(sl(2))^+$, te S_2-simetrični orbifold singlet verteks-algebre $\mathcal{M}(2)$. Posebno, pokazujemo da se $N_{-1}(sl(2))$ može proširiti do W-algebre tipa $(2, 3, 4, 5, 6, 7, 8)$. Na kraju iznosimo neke slutnje o egzistenciji W–algebri koje generaliziraju triplet i singlet algebru, te analiziramo njihove potencijalne karaktere.

Dražen Adamović
Department of Mathematics
Faculty of Science
University of Zagreb
10 000 Zagreb, Croatia
E-mail: adamovic@math.hr

Antun Milas
Department of Mathematics and Statistics
SUNY-Albany
Albany NY 12222, USA
E-mail: amilas@albany.edu

Received: 23.5.2023.
Accepted: 19.9.2023.

RAD HAZU. MATEMATIČKE ZNANOSTI
Vol. 28 = 558 (2024): 283-325
DOI: https://doi.org/10.21857/ypn4oc4q59

ON REDUCIBILITY OF REPRESENTATIONS INDUCED FROM THE ESSENTIALLY SPEH REPRESENTATIONS AND DISCRETE SERIES

Ivan Matić

Dedicated to Marko Tadić on the occasion of his 70th birthday.

Abstract. Let π stand for an essentially Speh representation of the form $L(\delta([\nu^a\rho,\nu^{a+k}\rho]),\dots,\delta([\nu^{a+n-1}\rho,\nu^{a+k+n-1}\rho]))$, where ρ is an irreducible cuspidal representation of the general linear group over a non-archimedean local field or its separable quadratic extension, $a\leq 0$, $2a+k>0$, and $n\geq 1$. Let σ denote a discrete series representation of either symplectic, special odd-orthogonal, or unitary group. We determine when the induced representation $\pi\rtimes\sigma$ reduces.

1. Introduction

Let ρ stand for an irreducible cuspidal representation of the general linear group over a non-archimedean local field or its separable quadratic extension, and let $\delta([\nu^a\rho,\nu^b\rho])$ stand for an irreducible essentially square-integrable representation attached to the segment $[\nu^a\rho,\nu^b\rho]$. The induced representation

$$\delta([\nu^a\rho,\nu^{a+k}\rho])\times\delta([\nu^{a+1}\rho,\nu^{a+k+1}\rho])\times\cdots\times\delta([\nu^{a+n-1}\rho,\nu^{a+k+n-1}\rho]),$$

where a is a real number, while k and n are non-negative integers such that $n\geq 1$, contains a unique irreducible subrepresentation, which is denoted by $L(\delta([\nu^a\rho,\nu^{a+k}\rho]),\dots,\delta([\nu^{a+n-1}\rho,\nu^{a+k+n-1}\rho]))$ and called the essentially Speh representation or shifted Speh representation. We note that, by [20, Theorem 7.5], the essentially Speh representations have a crucial role in the classification of the unitary dual of the general linear group.

We denote by σ a discrete series representation of either symplectic, special odd-orthogonal, or unitary group, and remind the reader that by the

2020 *Mathematics Subject Classification.* 22E35, 22E50, 11F70.
Key words and phrases. Classical p-adic groups, essentially Speh representations, discrete series.

Mœglin-Tadić classification σ is completely described by the so-called admissible triple, consisting of the Jordan block, the partial cuspidal support, and the ϵ-function.

We describe the reducibility of the induced representation

$$L(\delta([\nu^a\rho,\nu^{a+k}\rho]),\dots,\delta([\nu^{a+n-1}\rho,\nu^{a+k+n-1}\rho]))\rtimes\sigma$$

under the assumptions $a\leq 0$ and $2a+k>0$.

In some restrictive cases an analogous reducibility problem is completely solved. Taking $n=1$ we obtain the generalized principal series case, for which the reducibility has been described for general a and k in the symplectic and special odd-orthogonal group case in [18], and in the unitary group case in [13]. We note that all the results and proofs appearing in [13] can be used without any change in the symplectic and special odd-orthogonal case. If we additionally restrict ourselves to the case of the strongly positive σ, then the complete composition series of the generalized principal series follow from [17] and [9].

Taking $k=0$ and general a and n, we obtain the case of representations induced by the Zelevinsky segment representation and the discrete series, which has been initially studied in [10], where the reducibility criterion has been deduced. The complete composition series of the induced representation of such a form have been described in [11], under an additional assumption that a is half-integral.

In the case of cuspidal σ and positive a, a complete description of the composition series of $L(\delta([\nu^a\rho,\nu^{a+k}\rho]),\dots,\delta([\nu^{a+n-1}\rho,\nu^{a+k+n-1}\rho]))\rtimes\sigma$ has recently been obtained in [3]. We also note that for cuspidal σ reducibility of the representations induced from the essentially Speh ones appears as a particular case of a much more general and important contribution [8].

Finally, reducibility of the induced representations of the form

$$L(\delta([\nu^a\rho,\nu^{a+k}\rho]),\dots,\delta([\nu^{a+n-1}\rho,\nu^{a+k+n-1}\rho]))\rtimes\pi_A,$$

for general a,k and n, where π_A stands for an irreducible representation of Arthur type, is described in [2].

Our main result states that the induced representation $L(\delta([\nu^a\rho,\nu^{a+k}\rho]),\dots,\delta([\nu^{a+n-1}\rho,\nu^{a+k+n-1}\rho]))\rtimes\sigma$, under the mentioned conditions on a,k and n, is irreducible if and only if $\delta([\nu^{a+i}\rho,\nu^{a+k+i}\rho])\rtimes\sigma$ is irreducible for all $i\in\{0,1,\dots,n-1\}$.

One can use the results of [18] and [12] to describe the reducibility in terms of ρ, k,n, and the admissible triple corresponding to σ.

To obtain the reducibility criterion, we adopt the strategy introduced in [18] and further developed in [19], [10], [12], and [13].

First, if there is an $i\in\{0,1,\dots,n-1\}$ such that $\delta([\nu^{a+i}\rho,\nu^{a+k+i}\rho])\rtimes\sigma$ reduces, we note that ρ is a self-dual representation and that the irreducible

non-tempered representation

$$L(\delta([\nu^{-a-k-n+1}\rho,\nu^{-a-n+1}\rho]),\dots,\delta([\nu^{-a-k}\rho,\nu^{-a}\rho]);\sigma)$$

is a subquotient of $L(\delta([\nu^{a}\rho,\nu^{a+k}\rho]),\dots,\delta([\nu^{a+n-1}\rho,\nu^{a+k+n-1}\rho]))\rtimes\sigma$.

Then, taking the minimal $i\in\{0,1,\dots,n-1\}$ such that

$$\delta([\nu^{a+i}\rho,\nu^{a+k+i}\rho])\rtimes\sigma$$

reduces and starting from particular irreducible subquotients constructed in the reducibility proofs appearing in [12], we provide an inductive construction of an irreducible non-tempered subquotient of

$$L(\delta([\nu^{a}\rho,\nu^{a+k}\rho]),\dots,\delta([\nu^{a+n-1}\rho,\nu^{a+k+n-1}\rho]))\rtimes\sigma$$

which is non-isomorphic to

$$L(\delta([\nu^{-a-k-n+1}\rho,\nu^{-a-n+1}\rho]),\dots,\delta([\nu^{-a-k}\rho,\nu^{-a}\rho]);\sigma).$$

We note that the mentioned inductive procedure is mostly based on the combination of the intertwining operators method and the calculation of the Jacquet modules using the structural formula.

If $\delta([\nu^{a+i}\rho,\nu^{a+k+i}\rho])\rtimes\sigma$ is irreducible for all $i\in\{0,1,\dots,n-1\}$, using the reducibility criterion from [18] and [12], together with [22, Section 7], we deduce a precise description of the Jacquet modules of σ. Such a description enables us to determine the general form of possible irreducible subquotients of $L(\delta([\nu^{a}\rho,\nu^{a+k}\rho]),\dots,\delta([\nu^{a+n-1}\rho,\nu^{a+k+n-1}\rho]))\rtimes\sigma$. Since such a form is obtained by the calculation of the Jacquet modules, some rather complicated cases, as the one appearing in Proposition 5.5, need to be handled. We note that such a case presents one the main obstructions in this study. The obtained general description of possible irreducible subquotients leads us, after a rather involved calculation, to irreducibility of induced representation of the studied form.

Let us now describe the content of the paper in more detail. In the second section we introduce the notation and some preliminaries, while in the third section we state and prove several technical results which are used afterwards in the paper. In the fourth section we prove the reducibility of $L(\delta([\nu^{a}\rho,\nu^{a+k}\rho]),\dots,\delta([\nu^{a+n-1}\rho,\nu^{a+k+n-1}\rho]))\rtimes\sigma$ when there exists an $i\in\{0,1,\dots,n-1\}$ such that $\delta([\nu^{a+i}\rho,\nu^{a+k+i}\rho])\rtimes\sigma$ reduces, and several cases are studied separately. In the fifth section we state and prove the irreducibility results.

2. Preliminaries

Through the paper, we denote by F a non-archimedean local field. We fix one of the following series $\{G_n\}$ of classical groups over F.

In the odd orthogonal group case, we fix an anisotropic orthogonal vector space Y_0 over F of odd dimension and consider the Witt tower based on Y_0. For n such that $2n+1\geq \dim Y_0$, there is exactly one space V_n in the

tower of dimension $2n+1$. Let G_n stand for the special orthogonal group of this space. If V_n stands for the symplectic space of dimension $2n$ in the corresponding Witt tower, we denote by G_n the symplectic group of this space. We also consider the unitary groups $U(n, F'/F)$, where F' stands for a separable quadratic extension of F. There is also an anisotropic unitary space Y_0 over F', and the Witt tower of unitary spaces V_n based on Y_0. We denote by G_n the unitary group of the space V_n of dimension either $2n+1$ or $2n$.

We fix a minimal parabolic subgroup in G_n and consider only the standard parabolic subgroups with respect to this fixed minimal parabolic subgroup. When working with the unitary groups, we let F' denote a separable quadratic extension of F, otherwise let F' denote F. For representations δ_i of $GL(n_i, F')$, $i = 1, 2, \dots, k$, and representation τ of $G_{n'}$, we denote by $\delta_1 \times \cdots \times \delta_k \rtimes \tau$ the normalized parabolically induced representation $\mathrm{Ind}_M^{G_n}(\delta_1 \otimes \cdots \otimes \delta_k \otimes \tau)$. We use a similar notation to denote a parabolically induced representation of $GL(m, F')$.

By $\mathrm{Irr}(G_n)$ we denote the set of all irreducible admissible representations of G_n. Let $R(G_n)$ denote the Grothendieck group of admissible representations of finite length of G_n and define $R(G) = \oplus_{n \geq 0} R(G_n)$. In a similar way we define $\mathrm{Irr}(GL(n, F'))$, $R(GL(n, F'))$, and $R(GL) = \oplus_{n \geq 0} R(GL(n, F'))$.

Let n' stand for the Witt index of V_n if V_n is symplectic or even-unitary group, and $n' = n - \frac{1}{2}(\dim_{F'}(Y_0) - 1)$ otherwise. For $\sigma \in \mathrm{Irr}(G_n)$ and $0 \leq k \leq n'$ we denote by $r_{(k)}(\sigma)$ the normalized Jacquet module of σ with respect to the parabolic subgroup $P_{(k)}$ having the Levi subgroup equal to $GL(k, F') \times G_{n-k}$. We identify $r_{(k)}(\sigma)$ with its semisimplification in $R(GL(k, F')) \otimes R(G_{n-k})$ and consider

$$\mu^*(\sigma) = 1 \otimes \sigma + \sum_{k=1}^{n'} r_{(k)}(\sigma) \in R(GL) \otimes R(G).$$

For $\pi \in \mathrm{Irr}(GL(n, F'))$ we define $m^*(\pi) = \sum_{k=0}^{n} r_{(k)}(\pi) \in R(GL) \otimes R(GL)$, where $r_{(k)}(\pi)$ denotes the normalized Jacquet module of π with respect to the standard parabolic subgroup having the Levi factor equal to $GL(k, F') \times GL(n-k, F')$. We identify $r_{(k)}(\pi)$ with its semisimplification, and then extend m^* linearly to the whole of $R(GL)$.

Let ν stand for a composition of the determinant mapping with the normalized absolute value on F. Let $\rho \in R(GL)$ denote an irreducible supercuspidal representation. By a segment we mean a set of the form $[\rho, \nu^m \rho] := \{\rho, \nu\rho, \dots, \nu^m \rho\}$, where m is a non-negative integer. The induced representation $\nu^m \rho \times \nu^{m-1} \rho \times \cdots \times \rho$ has a unique irreducible subrepresentation ([23]), denoted by $\delta([\rho, \nu^m \rho])$. Representation $\delta([\rho, \nu^m \rho])$ is essentially square-integrable, and by [23] every irreducible essentially square-integrable representation in $R(GL)$ can be obtained in this way.

The essentially Speh representations are irreducible representations of the form $L(\delta_1, \delta_2, \dots, \delta_n)$, where $\delta_i \cong \delta([\nu^{a+i-1}\rho, \nu^{a+k+i-1}\rho])$, for $i = 1, 2, \dots, n$, a real number a, a non-negative integer k, and an irreducible cuspidal representation ρ from $R(GL)$.

For an irreducible smooth representation $\pi \in R(GL)$, let $\widetilde{\pi}$ stand for the contragredient representation of π. If $F = F'$, we say that π is F'/F-selfdual if $\pi \cong \widetilde{\pi}$. If $F \neq F'$, we denote by θ the non-trivial F-automorphism of F', let $\widehat{\pi}$ denote the representation $g \mapsto \widetilde{\pi}(\theta(g))$, and say that the representation π is F'/F-selfdual if $\pi \cong \widehat{\pi}$.

One of the main ingredients in our Jacquet module calculations is the following formula ([7, Theorem 2.1]):

THEOREM 2.1. *Let $\rho \in \mathrm{Irr}(GL(m, F))$ be a supercuspidal representation. Suppose that $a_1, b_1, \dots, a_m, b_m$ are real numbers such that $b_i - a_i$ is a non-negative integer for $i = 1, 2, \dots, m$, and that for $i = 1, 2, \dots, m-1$ we have $a_i < a_{i+1}$ and $b_i < b_{i+1}$. Then the following holds:*

$$m^*(L(\delta([\nu^{a_1}\rho, \nu^{b_1}\rho]), \dots, \delta([\nu^{a_m}\rho, \nu^{b_m}\rho]))) =$$
$$\sum_{(c_1,\dots,c_m)\in Lad} L(\delta([\nu^{c_1+1}\rho, \nu^{b_1}\rho]), \dots, \delta([\nu^{c_m+1}\rho, \nu^{b_m}\rho]))\otimes$$
$$L(\delta([\nu^{a_1}\rho, \nu^{c_1}\rho]), \dots, \delta([\nu^{a_m}\rho, \nu^{c_m}\rho])),$$

where Lad stands for the set of all ordered m-tuples $(c_1, \dots, c_m)$ such that $c_1 < \cdots < c_m$, $a_i - 1 \leq c_i \leq b_i$ and $c_i - a_i$ is an integer for all $i = 1, \dots, m$. We omit $\delta([\nu^x\rho, \nu^y\rho])$ if $x > y$.

We also frequently use the following structural formulas, which follow from [21], [16, Section 15], and Theorem 2.1:

THEOREM 2.2. *Let $\rho \in \mathrm{Irr}(GL(m, F))$ be a supercuspidal representation. If $F = F'$, let $\rho_1 = \widetilde{\rho}$, otherwise let $\rho_1 = \widehat{\rho}$. Let $k, l \in \mathbb{R}$ such that $k + l \in \mathbb{Z}_{\geq 0}$, and let σ denote an admissible representation of finite length of G_n. Write $\mu^*(\sigma) = \sum_{\delta,\sigma'} \delta \otimes \sigma'$. Then we have*

$$\mu^*(\delta([\nu^{-k}\rho, \nu^l\rho]) \rtimes \sigma) = \sum_{i=-k-1}^{l} \sum_{j=i}^{l} \sum_{\delta,\sigma'} \delta([\nu^{-i}\rho_1, \nu^k\rho_1]) \times \delta([\nu^{j+1}\rho, \nu^l\rho]) \times \delta$$
$$\otimes \delta([\nu^{i+1}\rho, \nu^j\rho]) \rtimes \sigma'.$$

Suppose that $a_1, b_1, \dots, a_m, b_m$ are real numbers such that $b_i - a_i$ is a non-negative integer for $i = 1, 2, \dots, m$, and that for $i = 1, 2, \dots, m-1$ we have

$a_i < a_{i+1}$ and $b_i < b_{i+1}$. Then we have

$$\mu^*(L(\delta([\nu^{a_1}\rho,\nu^{b_1}\rho]),\dots,\delta([\nu^{a_m}\rho,\nu^{b_m}\rho])\rtimes\sigma)) =$$
$$\sum_{(c_1,\dots,c_m,d_1,\dots,d_m)\in Lad'}\ \sum_{\delta,\sigma'} L(\delta([\nu^{d_1+1}\rho,\nu^{b_1}\rho]),\dots,\delta([\nu^{d_m+1}\rho,\nu^{b_m}\rho]))\times$$
$$L(\delta([\nu^{-c_m}\rho_1,\nu^{-a_m}\rho_1]),\dots,\delta([\nu^{-c_1}\rho_1,\nu^{-a_1}\rho_1]))\times\delta$$
$$\otimes L(\delta([\nu^{c_1+1}\rho,\nu^{d_1}\rho]),\dots,\delta([\nu^{c_m+1}\rho,\nu^{d_m}\rho]))\rtimes\sigma',$$

where Lad' stands for the set of all ordered $2m$-tuples $(c_1,\dots,c_m,d_1,\dots,d_m)$ such that $c_1<\dots<c_m$, $d_1<\dots<d_m$, $a_i-1\le c_i\le d_i\le b_i$ and c_i-a_i, d_i-a_i are integers for all $i=1,\dots,m$. We omit $\delta([\nu^x\rho',\nu^y\rho'])$ if $x>y$.

We briefly recall the subrepresentation version of the Langlands classification for general linear groups.

For every essentially square-integrable representation $\delta\in Irr(R(GL))$, there is a unique $e(\delta)\in\mathbb{R}$ such that $\nu^{-e(\delta)}\delta$ is unitarizable. Note that $e(\delta([\nu^a\rho,\nu^b\rho]))=(a+b)/2$. Suppose that $\delta_1,\delta_2,\dots,\delta_k$ are irreducible essentially square-integrable representations such that $e(\delta_1)\le e(\delta_2)\le\dots\le e(\delta_k)$. Then the induced representation $\delta_1\times\delta_2\times\dots\times\delta_k$ has a unique irreducible subrepresentation, which we denote by $L(\delta_1,\delta_2,\dots,\delta_k)$. This irreducible subrepresentation is called the Langlands subrepresentation, and it appears with multiplicity one in the composition series of $\delta_1\times\delta_2\times\dots\times\delta_k$. Every irreducible representation $\pi\in R(GL)$ is isomorphic to some $L(\delta_1,\delta_2,\dots,\delta_k)$ and, for a given π, the representations $\delta_1,\delta_2,\dots,\delta_k$ are unique up to a permutation.

We also use the subrepresentation version of the Langlands classification for classical groups, since it is more appropriate for our Jacquet module considerations. We realize a non-tempered irreducible representation π of G_n as a unique irreducible (Langlands) subrepresentation of an induced representation of the form $\delta_1\times\delta_2\times\dots\times\delta_k\rtimes\tau$, where τ is an irreducible tempered representation of some G_t, and $\delta_1,\delta_2,\dots,\delta_k\in R(GL)$ are irreducible essentially square-integrable representations such that $e(\delta_1)\le e(\delta_2)\le\dots\le e(\delta_k)<0$. In this case, we write $\pi=L(\delta_1,\delta_2,\dots,\delta_k;\tau)$.

We will use the following result ([5, Lemma 5.5]) several times.

LEMMA 2.3. *Suppose that $\pi\in R(G_n)$ is an irreducible representation, λ an irreducible representation of the Levi subgroup M of G_n, and π is a subrepresentation of $Ind_M^{G_n}(\lambda)$. If $L>M$, then there is an irreducible subquotient ρ of $Ind_M^L(\lambda)$ such that π is a subrepresentation of $Ind_L^{G_n}(\rho)$.*

By the Mœglin-Tadić classification of discrete series [14, 16], which holds unconditionally, due to [1], [15, Théorème 3.1.1] and [4, Theorem 7.8], a discrete series $\sigma\in G_n$ corresponds to an admissible triple which consists of the Jordan block, the partial cuspidal support, and the ϵ-function. More details on this invariants can be found in [16, 18] and in [6], where slightly different approach, which also covers the classical group case, has been used.

Note that, if a twist by a character of the form ν^x, with $x \in \mathbb{R}$, of some irreducible unitarizable cuspidal representation $\rho \in R(GL)$ appears in the cuspidal support of a discrete series $\sigma \in R(G)$, then ρ is an F'/F-selfdual representation.

Through the paper, we fix a discrete series σ and we denote the corresponding admissible triple by $(\mathrm{Jord}(\sigma), \sigma_{cusp}, \epsilon_\sigma)$. For an irreducible F'/F-selfdual cuspidal representation ρ_1 of $GL(n_1, F')$, let $\mathrm{Jord}_{\rho_1}(\sigma) = \{x : (x, \rho_1) \in \mathrm{Jord}(\sigma)\}$. If $\mathrm{Jord}_{\rho_1}(\sigma) \neq \emptyset$ and $x \in \mathrm{Jord}_{\rho_1}(\sigma)$, denote $x_{_} = \max\{y \in \mathrm{Jord}_{\rho_1}(\sigma) : y < x\}$, if it exists.

3. Some technical results

In this section we state and prove several technical results which are often used in the paper.

Through this section we fix an irreducible F'/F-selfdual cuspidal representation $\rho \in R(GL)$.

LEMMA 3.1. *Let a, b denote real numbers such that $b-a$ is a non-negative integer, and let n stand for a positive integer. Suppose that π is an irreducible subquotient of*

$$L(\delta([\nu^a\rho, \nu^b\rho]), \dots, \delta([\nu^{a+n-1}\rho, \nu^{b+n-1}\rho])) \times \delta([\nu^{a+n}\rho, \nu^{b+n}\rho]).$$

Then either

$$\pi \cong L(\delta([\nu^a\rho, \nu^b\rho]), \dots, \delta([\nu^{a+n-1}\rho, \nu^{b+n-1}\rho]), \delta([\nu^{a+n}\rho, \nu^{b+n}\rho]))$$

or

$$\pi \cong L(\delta([\nu^a\rho, \nu^b\rho]), \dots, \delta([\nu^{a+n-2}\rho, \nu^{b+n-2}\rho]), \delta([\nu^{a+n}\rho, \nu^{b+n-1}\rho]), \delta([\nu^{a+n-1}\rho, \nu^{b+n}\rho])).$$

PROOF. Using the Langlands classification, we write π as a unique irreducible subrepresentation of

$$\delta([\nu^{x_1}\rho, \nu^{y_1}\rho]) \times \cdots \times \delta([\nu^{x_l}\rho, \nu^{y_l}\rho]).$$

If $x_i > x_{i+1}$ for some $i \in \{1, 2, \dots, l-1\}$, then $e(\delta([\nu^{x_i}\rho, \nu^{y_i}\rho])) \leq e(\delta([\nu^{x_{i+1}}\rho, \nu^{y_{i+1}}\rho]))$ implies $y_i < y_{i+1}$, so $\delta([\nu^{x_i}\rho, \nu^{y_i}\rho]) \times \delta([\nu^{x_{i+1}}\rho, \nu^{y_{i+1}}\rho])$ is irreducible and isomorphic to $\delta([\nu^{x_{i+1}}\rho, \nu^{y_{i+1}}\rho]) \times \delta([\nu^{x_i}\rho, \nu^{y_i}\rho])$. Thus, we can assume $x_1 \leq x_2 \leq \cdots \leq x_l$. It follows that $x_1 = a$ and $m^*(\pi) \geq \delta([\nu^a\rho, \nu^{y_1}\rho]) \otimes L(\delta([\nu^{x_2}\rho, \nu^{y_2}\rho]), \dots, \delta([\nu^{x_l}\rho, \nu^{y_l}\rho]))$, so $y_1 \in \{b, b+n\}$.

Let us suppose that $y_1 = b+n$. Using Theorem 2.1 we obtain that $a+n \leq b+1$ and $L(\delta([\nu^{x_2}\rho, \nu^{y_2}\rho]), \dots, \delta([\nu^{x_l}\rho, \nu^{y_l}\rho]))$ is an irreducible subquotient of $L(\delta([\nu^{a+1}\rho, \nu^{b+1}\rho]), \dots, \delta([\nu^{a+n-1}\rho, \nu^{b+n-1}\rho])) \times \delta([\nu^{a+n}\rho, \nu^b\rho])$.

Now we have $x_2 = a+1$ and $m^*(L(\delta([\nu^{x_2}\rho, \nu^{y_2}\rho]), \dots, \delta([\nu^{x_l}\rho, \nu^{y_l}\rho]))) \geq \delta([\nu^{a+1}\rho, \nu^{y_2}\rho]) \otimes L(\delta([\nu^{x_3}\rho, \nu^{y_3}\rho]), \dots, \delta([\nu^{x_l}\rho, \nu^{y_l}\rho]))$. It directly follows that

$y_2 = b+1$, which gives

$$\pi \cong L(\delta([\nu^a\rho, \nu^{b+n}\rho]), \delta([\nu^{a+1}\rho, \nu^{b+1}\rho]), \delta([\nu^{x_3}\rho, \nu^{y_3}\rho]), \dots, \delta([\nu^{x_l}\rho, \nu^{y_l}\rho]))$$
$$\hookrightarrow \delta([\nu^a\rho, \nu^{b+n}\rho]) \times \delta([\nu^{a+1}\rho, \nu^{b+1}\rho]) \times L(\delta([\nu^{x_3}\rho, \nu^{y_3}\rho]), \dots, \delta([\nu^{x_l}\rho, \nu^{y_l}\rho]))$$
$$\cong \delta([\nu^{a+1}\rho, \nu^{b+1}\rho]) \times \delta([\nu^a\rho, \nu^{b+n}\rho]) \times L(\delta([\nu^{x_3}\rho, \nu^{y_3}\rho]), \dots, \delta([\nu^{x_l}\rho, \nu^{y_l}\rho])),$$

and the Frobenius reciprocity implies that $m^*(\pi)$ contains an irreducible constituent of the form $\nu^{b+1}\rho \otimes \pi'$, which is impossible for $n \geq 2$.

Consequently, $y_1 = b$ and $L(\delta([\nu^{x_2}\rho, \nu^{y_2}\rho]), \dots, \delta([\nu^{x_l}\rho, \nu^{y_l}\rho]))$ is an irreducible subquotient of

$$L(\delta([\nu^{a+1}\rho, \nu^{b+1}\rho]), \dots, \delta([\nu^{a+n-1}\rho, \nu^{b+n-1}\rho])) \times \delta([\nu^{a+n}\rho, \nu^{b+n}\rho]).$$

Continuing in the same way, we obtain $x_i = a+i-1$ and $y_i = b+i-1$ for $i = 1, 2, \dots, n-1$, and

$$L(\delta([\nu^{x_n}\rho, \nu^{y_n}\rho]), \dots, \delta([\nu^{x_l}\rho, \nu^{y_l}\rho])) \leq$$
$$\delta([\nu^{a+n-1}\rho, \nu^{b+n-1}\rho]) \times \delta([\nu^{a+n}\rho, \nu^{b+n}\rho]).$$

From the composition series follows

$$L(\delta([\nu^{x_n}\rho, \nu^{y_n}\rho]), \dots, \delta([\nu^{x_l}\rho, \nu^{y_l}\rho])) \in$$
$$\{L(\delta([\nu^{a+n-1}\rho, \nu^{b+n-1}\rho]), \delta([\nu^{a+n}\rho, \nu^{b+n}\rho])),$$
$$\delta([\nu^{a+n}\rho, \nu^{b+n-1}\rho]) \times \delta([\nu^{a+n-1}\rho, \nu^{b+n}\rho])\},$$

and hence $l = n+1$, so the lemma is proved. □

LEMMA 3.2. *Suppose that x and y are such that $x+y$ is a negative integer. Suppose that $L(\delta([\nu^{x_1}\rho, \nu^{y_1}\rho]), \dots, \delta([\nu^{x_l}\rho, \nu^{y_l}\rho]); \tau)$ is an irreducible subquotient of $L(\delta([\nu^{z_1}\rho, \nu^{w_1}\rho]), \dots, \delta([\nu^{z_l}\rho, \nu^{w_l}\rho])) \rtimes \tau'$, where τ and τ' are irreducible tempered representations, and for all $i = 1, \dots, l$ we have $z_i + w_i > 0$, $w_i < -x$. Also, suppose that $x + y < x_1 + y_1$. Then*

$$L(\delta([\nu^x\rho, \nu^y\rho]), \delta([\nu^{x_1}\rho, \nu^{y_1}\rho]), \dots, \delta([\nu^{x_l}\rho, \nu^{y_l}\rho]); \tau)$$

is an irreducible subquotient of

$$L(\delta([\nu^{z_1}\rho, \nu^{w_1}\rho]), \dots, \delta([\nu^{z_l}\rho, \nu^{w_l}\rho])) \rtimes L(\delta([\nu^x\rho, \nu^y\rho]); \tau').$$

PROOF. In $R(G)$ we have

$$L(\delta([\nu^x\rho, \nu^y\rho]), \delta([\nu^{x_1}\rho, \nu^{y_1}\rho]), \dots, \delta([\nu^{x_l}\rho, \nu^{y_l}\rho]); \tau)$$
$$\leq \delta([\nu^x\rho, \nu^y\rho]) \rtimes L(\delta([\nu^{x_1}\rho, \nu^{y_1}\rho]), \dots, \delta([\nu^{x_l}\rho, \nu^{y_l}\rho]); \tau)$$
$$\leq \delta([\nu^x\rho, \nu^y\rho]) \times L(\delta([\nu^{z_1}\rho, \nu^{w_1}\rho]), \dots, \delta([\nu^{z_l}\rho, \nu^{w_l}\rho])) \rtimes \tau'$$
$$= L(\delta([\nu^{z_1}\rho, \nu^{w_1}\rho]), \dots, \delta([\nu^{z_l}\rho, \nu^{w_l}\rho])) \times \delta([\nu^x\rho, \nu^y\rho]) \rtimes \tau'.$$

From the semi-simplification in $R(G)$ follows that there is an irreducible subquotient π of $\delta([\nu^x\rho, \nu^y\rho]) \rtimes \tau'$ such that

$$L(\delta([\nu^x\rho, \nu^y\rho]), \delta([\nu^{x_1}\rho, \nu^{y_1}\rho]), \dots, \delta([\nu^{x_l}\rho, \nu^{y_l}\rho]); \tau)$$

is a subquotient of $L(\delta([\nu^{z_1}\rho,\nu^{w_1}\rho]),\dots,\delta([\nu^{z_l}\rho,\nu^{w_l}\rho]))\rtimes\pi$.

Since $L(\delta([\nu^{x}\rho,\nu^{y}\rho]),\delta([\nu^{x_1}\rho,\nu^{y_1}\rho]),\dots,\delta([\nu^{x_l}\rho,\nu^{y_l}\rho]);\tau)$ is a subrepresentation of

$$\delta([\nu^{x}\rho,\nu^{y}\rho])\rtimes L(\delta([\nu^{x_1}\rho,\nu^{y_1}\rho]),\dots,\delta([\nu^{x_l}\rho,\nu^{y_l}\rho]);\tau),$$

using the Frobenius reciprocity we conclude that

$$\mu^*(L(\delta([\nu^{x}\rho,\nu^{y}\rho]),\delta([\nu^{x_1}\rho,\nu^{y_1}\rho]),\dots,\delta([\nu^{x_l}\rho,\nu^{y_l}\rho]);\tau))$$

contains

$$\delta([\nu^{x}\rho,\nu^{y}\rho])\otimes L(\delta([\nu^{x_1}\rho,\nu^{y_1}\rho]),\dots,\delta([\nu^{x_l}\rho,\nu^{y_l}\rho]);\tau).$$

Consequently, $\mu^*(L(\delta([\nu^{z_1}\rho,\nu^{w_1}\rho]),\dots,\delta([\nu^{z_l}\rho,\nu^{w_l}\rho]))\rtimes\pi)$ contains an irreducible constituent of the form $\delta([\nu^{x}\rho,\nu^{y}\rho])\otimes\pi'$. Since we have $z_i+w_i>0$ and $w_i<-x$ for all $i=1,\dots,l$, it follows that $\mu^*(\pi)$ contains an irreducible constituent of the form $\delta([\nu^{x}\rho,\nu^{y'}\rho])\otimes\pi'$, for $x\le y'\le y$. Using temperedness of τ' and Theorem 2.2, one can easily see that only irreducible constituent of such a form appearing in $\mu^*(\delta([\nu^{x}\rho,\nu^{y}\rho])\rtimes\tau')$ is $\delta([\nu^{x}\rho,\nu^{y}\rho])\otimes\tau'$, which appears with multiplicity one and is contained in $\mu^*(L(\delta([\nu^{x}\rho,\nu^{y}\rho]);\tau'))$. Thus, $\pi\cong L(\delta([\nu^{x}\rho,\nu^{y}\rho]);\tau')$ and the lemma is proved. □

LEMMA 3.3. *Suppose that* $L(\delta([\nu^{x_1}\rho,\nu^{y_1}\rho]),\dots,\delta([\nu^{x_l}\rho,\nu^{y_l}\rho]);\tau)$ *is an irreducible subquotient of*

$$L(\delta([\nu^{c}\rho,\nu^{d}\rho]),\delta([\nu^{c+1}\rho,\nu^{d+1}\rho]),\dots,\delta([\nu^{c+l-1}\rho,\nu^{d+l-1}\rho]))\rtimes\tau',$$

where τ *and* τ' *are irreducible tempered,* $l\ge 1$, *and* $c+d>0$. *If* $-d-c-2l<x_1+y_1$, *then* $L(\delta([\nu^{-d-l}\rho,\nu^{-c-l}\rho]),\delta([\nu^{x_1}\rho,\nu^{y_1}\rho]),\dots,\delta([\nu^{x_l}\rho,\nu^{y_l}\rho]);\tau)$ *is an irreducible subquotient of*

$$L(\delta([\nu^{c}\rho,\nu^{d}\rho]),\delta([\nu^{c+1}\rho,\nu^{d+1}\rho]),\dots,\delta([\nu^{c+l}\rho,\nu^{d+l}\rho]))\rtimes\tau'.$$

PROOF. In $R(G)$ we have

$$\begin{aligned}
&L(\delta([\nu^{-d-l}\rho,\nu^{-c-l}\rho]),\delta([\nu^{x_1}\rho,\nu^{y_1}\rho]),\dots,\delta([\nu^{x_l}\rho,\nu^{y_l}\rho]);\tau)\\
&\le\delta([\nu^{-d-l}\rho,\nu^{-c-l}\rho])\rtimes L(\delta([\nu^{x_1}\rho,\nu^{y_1}\rho]),\dots,\delta([\nu^{x_l}\rho,\nu^{y_l}\rho]);\tau)\\
&\le\delta([\nu^{-d-l}\rho,\nu^{-c-l}\rho])\times L(\delta([\nu^{c}\rho,\nu^{d}\rho]),\dots,\delta([\nu^{c+l-1}\rho,\nu^{d+l-1}\rho]))\rtimes\tau'\\
&=L(\delta([\nu^{c}\rho,\nu^{d}\rho]),\dots,\delta([\nu^{c+l-1}\rho,\nu^{d+l-1}\rho]))\times\delta([\nu^{-d-l}\rho,\nu^{-c-l}\rho])\rtimes\tau'\\
&=L(\delta([\nu^{c}\rho,\nu^{d}\rho]),\dots,\delta([\nu^{c+l-1}\rho,\nu^{d+l-1}\rho]))\times\delta([\nu^{c+l}\rho,\nu^{d+l}\rho])\rtimes\tau'.
\end{aligned}$$

Thus, there is an irreducible subquotient π of

$$L(\delta([\nu^{c}\rho,\nu^{d}\rho]),\dots,\delta([\nu^{c+l-1}\rho,\nu^{d+l-1}\rho]))\times\delta([\nu^{c+l}\rho,\nu^{d+l}\rho])$$

such that $L(\delta([\nu^{-d-l}\rho,\nu^{-c-l}\rho]),\delta([\nu^{x_1}\rho,\nu^{y_1}\rho]),\dots,\delta([\nu^{x_l}\rho,\nu^{y_l}\rho]);\tau)$ is a subquotient of $\pi\rtimes\tau'$. By Lemma 3.1, either

$$\pi\cong L(\delta([\nu^{c}\rho,\nu^{d}\rho]),\dots,\delta([\nu^{c+l}\rho,\nu^{d+l}\rho]))$$

or

$$\pi \cong L(\delta([\nu^c\rho, \nu^d\rho]), \dots, \delta([\nu^{c+l-2}\rho, \nu^{d+l-2}\rho]),$$
$$\delta([\nu^{c+l}\rho, \nu^{d+l-1}\rho]), \delta([\nu^{c+l-1}\rho, \nu^{d+l}\rho]))$$

If

$$\pi \cong L(\delta([\nu^c\rho, \nu^d\rho]), \dots, \delta([\nu^{c+l-2}\rho, \nu^{d+l-2}\rho]),$$
$$\delta([\nu^{c+l}\rho, \nu^{d+l-1}\rho]), \delta([\nu^{c+l-1}\rho, \nu^{d+l}\rho])),$$

we have

$$L(\delta([\nu^{-d-l}\rho, \nu^{-c-l}\rho]), \delta([\nu^{x_1}\rho, \nu^{y_1}\rho]), \dots, \delta([\nu^{x_l}\rho, \nu^{y_l}\rho]); \tau) \leq$$
$$L(\delta([\nu^c\rho, \nu^d\rho]), \dots, \delta([\nu^{c+l-2}\rho, \nu^{d+l-2}\rho]))\times$$
$$\delta([\nu^{c+l}\rho, \nu^{d+l-1}\rho]) \times \delta([\nu^{c+l-1}\rho, \nu^{d+l}\rho]) \rtimes \tau'.$$

Using the Frobenius reciprocity, we obtain that

$$\mu^*(L(\delta([\nu^{-d-l}\rho, \nu^{-c-l}\rho]), \delta([\nu^{x_1}\rho, \nu^{y_1}\rho]), \dots, \delta([\nu^{x_l}\rho, \nu^{y_l}\rho]); \tau))$$

contains

$$\delta([\nu^{-d-l}\rho, \nu^{-c-l}\rho]) \otimes L(\delta([\nu^{x_1}\rho, \nu^{y_1}\rho]), \dots, \delta([\nu^{x_l}\rho, \nu^{y_l}\rho]); \tau).$$

Since $-d-l < c$, using Theorem 2.2, together with temperedness of τ', one can conclude that

$$\mu^*(L(\delta([\nu^c\rho, \nu^d\rho]), \dots, \delta([\nu^{c+l-2}\rho, \nu^{d+l-2}\rho]))\times$$
$$\delta([\nu^{c+l}\rho, \nu^{d+l-1}\rho]) \times \delta([\nu^{c+l-1}\rho, \nu^{d+l}\rho]) \rtimes \tau')$$

does not contain an irreducible constituent of the form $\delta([\nu^{-d-l}\rho, \nu^{-c-l}\rho])\otimes\pi'$, a contradiction. Thus,

$$\pi \cong L(\delta([\nu^c\rho, \nu^d\rho]), \delta([\nu^{c+1}\rho, \nu^{d+1}\rho]), \dots, \delta([\nu^{c+l}\rho, \nu^{d+l}\rho]))$$

and the lemma is proved. □

The following two lemmas are direct consequences of [22, Section 8] and the proofs of [12, Lemmas 3.2, 5.2]:

LEMMA 3.4. *Let $\sigma_1 \in R(G)$ denote a discrete series such that $\mathrm{Jord}_\rho(\sigma_1) \neq \emptyset$. Suppose that a and b are such that $a+b$ is a positive integer and $a-x$ is an integer for $2x+1 \in \mathrm{Jord}_\rho(\sigma_1)$.*

(1) Suppose that $a \leq 0$ and $2b+1 \notin \mathrm{Jord}_\rho(\sigma)$. If $\langle -2a+1, 2b+1\rangle \cap \mathrm{Jord}_\rho(\sigma) \neq \emptyset$ and $2x+1 = \max(\langle -2a+1, 2b+1\rangle \cap \mathrm{Jord}_\rho(\sigma))$, then $L(\delta([\nu^{-x}\rho, \nu^{-a}\rho]); \sigma_2)$ is an irreducible subquotient of $\delta([\nu^a\rho, \nu^b\rho]) \rtimes \sigma_1$, where σ_2 stands for the unique discrete series subrepresentation of $\delta([\nu^{x+1}\rho, \nu^b\rho]) \rtimes \sigma_1$.

(2) *Suppose that* $a \leq 0$, $-2a+1 \in \mathrm{Jord}_\rho(\sigma)$, *and* $\langle -2a+1, 2b+1] \cap \mathrm{Jord}_\rho(\sigma) = \emptyset$. *Let* σ_2 *stand for a unique discrete series subrepresentation of* $\delta([\nu^{-a+1}\rho, \nu^b\rho]) \rtimes \sigma_1$, *and let* τ *stand for an irreducible tempered subrepresentation of* $\delta([\nu^a\rho, \nu^{-a}\rho]) \rtimes \sigma_2$ *which is a subrepresentation of an induced representation of the form* $\delta([\nu^{-a+1}\rho, \nu^b\rho]) \rtimes \pi$. *Then* τ *is an irreducible subquotient of* $\delta([\nu^a\rho, \nu^b\rho]) \rtimes \sigma_1$.

(3) *Suppose that* $a > 0$ *and* $2b+1 \notin \mathrm{Jord}_\rho(\sigma)$. *If* $[2a-1, 2b+1\rangle \cap \mathrm{Jord}_\rho(\sigma) \neq \emptyset$ *and* $2x+1 = \max([2a-1, 2b+1\rangle \cap \mathrm{Jord}_\rho(\sigma))$, *then* $L(\delta([\nu^{-x}\rho, \nu^{-a}\rho]); \sigma_2)$ *is an irreducible subquotient of* $\delta([\nu^a\rho, \nu^b\rho]) \rtimes \sigma_1$, *where* σ_2 *stands for the unique discrete series subrepresentation of* $\delta([\nu^{x+1}\rho, \nu^b\rho]) \rtimes \sigma_1$.

LEMMA 3.5. *Let* $\sigma_1 \in R(G)$ *denote a discrete series such that* $\mathrm{Jord}_\rho(\sigma_1) \neq \emptyset$. *Suppose that* a *and* b *are such that* $a+b$ *is a positive integer,* $a \leq 0$, *and* $a-x$ *is an integer for* $2x+1 \in \mathrm{Jord}_\rho(\sigma_1)$. *Suppose that* $-2a+1 \notin \mathrm{Jord}_\rho(\sigma_1)$, $\langle -2a+1, 2b+1] \cap \mathrm{Jord}_\rho(\sigma_1) \neq \emptyset$, *and let* $2x+1 = \min(\langle -2a+1, 2b+1] \cap \mathrm{Jord}_\rho(\sigma_1))$. *Then there is a unique discrete series* σ_2 *such that* σ_1 *is a subrepresentation of* $\delta([\nu^{a+1}\rho, \nu^x\rho]) \rtimes \sigma_2$.

(1) *If* $x < b$, *then* $L(\delta([\nu^{-b}\rho, \nu^x\rho]); \sigma_2)$ *is an irreducible subquotient of* $\delta([\nu^a\rho, \nu^b\rho]) \rtimes \sigma_1$.

(2) *Suppose that* $x = b$, *and let* τ *stand for an irreducible tempered subrepresentation of* $\delta([\nu^{-b}\rho, \nu^b\rho]) \rtimes \sigma_2$ *which is a subrepresentation of an induced representation of the form* $\delta([\nu^{a+1}\rho, \nu^b\rho]) \times \delta([\nu^{a+1}\rho, \nu^b\rho]) \rtimes \pi$. *Then* τ *is an irreducible subquotient of* $\delta([\nu^a\rho, \nu^b\rho]) \rtimes \sigma_1$.

In the following several lemmas we treat the tempered case. Through the rest of this section, $\sigma_1 \in R(G)$ stands for a discrete series such that $\mathrm{Jord}_\rho(\sigma_1) \neq \emptyset$. Let a and b denote the real numbers such that $a+b$ is a positive integer and $a-x$ is an integer for $2x+1 \in \mathrm{Jord}_\rho(\sigma_1)$.

Until said otherwise, let $c > 0$ be such that $c-b$ is a positive integer and $2c+1 \notin \mathrm{Jord}_\rho(\sigma_1)$. Let $2x_m+1$ stand for the maximal element of $\mathrm{Jord}_\rho(\sigma_1)$ such that $x_m < c$. We denote by τ a unique irreducible subrepresentation of $\delta([\nu^{-c}\rho, \nu^c\rho]) \rtimes \sigma_1$ which is not a subrepresentation of an induced representation of the form $\delta([\nu^{x_m+1}\rho, \nu^c\rho]) \times \delta([\nu^{x_m+1}\rho, \nu^c\rho]) \rtimes \pi$.

LEMMA 3.6. *Suppose that* $2b+1 \notin \mathrm{Jord}_\rho(\sigma_1)$, *but* $\langle -2a+1, 2b+1\rangle \cap \mathrm{Jord}_\rho(\sigma_1) \neq \emptyset$, *and let* $2y+1 = \max(\langle -2a+1, 2b+1\rangle \cap \mathrm{Jord}_\rho(\sigma_1))$. *We denote by* σ_2 *a unique discrete series subrepresentation of* $\delta([\nu^{y+1}\rho, \nu^b\rho]) \rtimes \sigma_1$, *and let* τ' *stand for a unique irreducible subrepresentation of* $\delta([\nu^{-c}\rho, \nu^c\rho]) \rtimes \sigma_2$ *which is not a subrepresentation of an induced representation of the form* $\delta([\nu^{z+1}\rho, \nu^c\rho]) \times \delta([\nu^{z+1}\rho, \nu^c\rho]) \rtimes \pi$ *for* $z = \max\{b, x_m\}$. *Then* $L(\delta([\nu^{-y}\rho, \nu^{-a}\rho]); \tau')$ *is an irreducible subquotient of* $\delta([\nu^a\rho, \nu^b\rho]) \rtimes \tau$.

PROOF. Note that τ' is a subrepresentation of

$$\delta([\nu^{y+1}\rho, \nu^b\rho]) \times \delta([\nu^{-c}\rho, \nu^c\rho]) \rtimes \sigma_1.$$

Since $y > -a$, a simple commuting argument implies that $L(\delta([\nu^{-y}\rho, \nu^{-a}\rho]);\tau')$ is a subrepresentation of

$$\delta([\nu^{y+1}\rho,\nu^b\rho]) \times \delta([\nu^{-y}\rho,\nu^{-a}\rho]) \times \delta([\nu^{-c}\rho,\nu^c\rho]) \rtimes \sigma_1.$$

Thus, $\mu^*(L(\delta([\nu^{-y}\rho,\ \nu^{-a}\rho]);\tau'))$ contains an irreducible constituent of the form $\delta([\nu^{y+1}\rho,\nu^b\rho]) \otimes \pi$.

On the other hand, by Lemma 2.3, there is an irreducible subquotient τ'' of $\delta([\nu^{-c}\rho,\nu^c\rho]) \rtimes \sigma_1$ such that τ' is a subrepresentation of $\delta([\nu^{y+1}\rho,\nu^b\rho]) \rtimes \tau''$. It is well-known that $\delta([\nu^{-c}\rho,\nu^c\rho]) \rtimes \sigma_1$ is a direct sum of two mutually non-isomorphic irreducible tempered representations, and by [22, Section 4], exactly one of them is a subrepresentation of an induced representation of the form

$$\delta([\nu^{x_m+1}\rho,\nu^c\rho]) \times \delta([\nu^{x_m+1}\rho,\nu^c\rho]) \rtimes \pi. \tag{3.1}$$

Suppose that τ'' is a subrepresentation of an induced representation of the form (3.1). Then we have

$$\tau' \hookrightarrow \delta([\nu^{y+1}\rho,\nu^b\rho]) \times \delta([\nu^{x_m+1}\rho,\nu^c\rho]) \times \delta([\nu^{x_m+1}\rho,\nu^c\rho]) \rtimes \pi.$$

If $x_m > b$, we have $z = x_m$, $x_m + 1 > b + 1$, so

$$\delta([\nu^{y+1}\rho,\nu^b\rho]) \times \delta([\nu^{x_m+1}\rho,\nu^c\rho]) \times \delta([\nu^{x_m+1}\rho,\nu^c\rho]) \rtimes \pi \cong$$
$$\delta([\nu^{x_m+1}\rho,\nu^c\rho]) \times \delta([\nu^{x_m+1}\rho,\nu^c\rho]) \times \delta([\nu^{y+1}\rho,\nu^b\rho]) \rtimes \pi,$$

contradicting the definition of τ'.

If $x_m < b$, we have $y = x_m$ and $z = b$, so

$$\delta([\nu^{y+1}\rho,\nu^b\rho]) \times \delta([\nu^{x_m+1}\rho,\nu^c\rho]) \times \delta([\nu^{x_m+1}\rho,\nu^c\rho]) \rtimes \pi \cong$$
$$\delta([\nu^{x_m+1}\rho,\nu^c\rho]) \times \delta([\nu^{x_m+1}\rho,\nu^c\rho]) \times \delta([\nu^{x_m+1}\rho,\nu^b\rho]) \rtimes \pi \hookrightarrow$$
$$\delta([\nu^{b+1}\rho,\nu^c\rho]) \times \delta([\nu^{b+1}\rho,\nu^c\rho]) \times \delta([\nu^{x_m+1}\rho,\nu^b\rho]) \times$$
$$\delta([\nu^{x_m+1}\rho,\nu^b\rho]) \times \delta([\nu^{x_m+1}\rho,\nu^b\rho]) \rtimes \pi,$$

which again contradicts the definition of τ'. Consequently, $\tau'' \cong \tau$. This leads to

$$L(\delta([\nu^{-y}\rho,\nu^{-a}\rho]);\tau') \le \delta([\nu^a\rho,\nu^y\rho]) \rtimes \tau'$$
$$\le \delta([\nu^a\rho,\nu^y\rho]) \times \delta([\nu^{y+1}\rho,\nu^b\rho]) \rtimes \tau.$$

Thus, there is a $\pi \in \{\delta([\nu^a\rho,\nu^b\rho]), L(\delta([\nu^a\rho,\nu^y\rho]), \delta([\nu^{y+1}\rho,\nu^b\rho]))\}$ such that $L(\delta([\nu^{-y}\rho,\nu^{-a}\rho]);\tau')$ is an irreducible subquotient of $\pi \rtimes \tau$.

Obviously, $m^*(L(\delta([\nu^a\rho,\nu^y\rho]), \delta([\nu^{y+1}\rho,\nu^b\rho])))$ does not contain an irreducible constituent of the form $\delta([\nu^{y+1}\rho,\nu^t\rho]) \otimes \pi'$, for $y + 1 \le t$.

On the other hand, if $\delta([\nu^{y+1}\rho,\nu^t\rho]) \otimes \pi'$, for $y + 1 \le t$, is an irreducible constituent of $\mu^*(\delta([\nu^{-c}\rho,\nu^c\rho]) \rtimes \sigma_1)$, using Theorem 2.2, we conclude that either $t = c$ or $2t + 1 \in \mathrm{Jord}_\rho(\sigma_1)$. From the description of $\mathrm{Jord}_\rho(\sigma_1)$ we get $t > b$.

Consequently, $\mu^*(L(\delta([\nu^a\rho,\nu^y\rho]),\delta([\nu^{y+1}\rho,\nu^b\rho]))\rtimes\tau)$ does not contain an irreducible constituent of the form $\delta([\nu^{y+1}\rho,\nu^b\rho])\otimes\pi'$.

Since $\mu^*(L(\delta([\nu^{-y}\rho,\ \nu^{-a}\rho]);\tau'))$ contains an irreducible constituent of such a form, we obtain $\pi\cong\delta([\nu^a\rho,\nu^b\rho])$. This ends the proof. □

LEMMA 3.7. *Suppose that $a\leq 0$ and $[-2a+1,2b+1]\cap \mathrm{Jord}_\rho(\sigma_1)=\{-2a+1\}$. Let σ_2 be a unique discrete series subrepresentation of $\delta([\nu^{-a+1}\rho,\nu^b\rho])\rtimes\sigma_1$, and let τ' stand for a unique irreducible subrepresentation of $\delta([\nu^a\rho,\nu^{-a}\rho])\times\delta([\nu^{-c}\rho,\nu^c\rho])\rtimes\sigma_2$ which is a subrepresentation of an induced representation of the form $\delta([\nu^{-a+1}\rho,\nu^b\rho])\rtimes\pi$ and is not a subrepresentation of an induced representation of the form $\delta([\nu^{z+1}\rho,\nu^c\rho])\times\delta([\nu^{z+1}\rho,\nu^c\rho])\rtimes\pi$ for $z=\max\{b,x_m\}$. Then τ' is an irreducible subquotient of $\delta([\nu^a\rho,\nu^b\rho])\rtimes\tau$.*

PROOF. Since $-2a+1,2c+1\notin\mathrm{Jord}_\rho(\sigma_2)$, it follows from [19, Section 1] or [13, Theorem 2.2.(i)], that $\delta([\nu^a\rho,\nu^{-a}\rho])\times\delta([\nu^{-c}\rho,\nu^c\rho])\rtimes\sigma_2$ is a direct sum of four mutually non-isomorphic irreducible tempered representations. We denote by τ'' an irreducible tempered subrepresentation of $\delta([\nu^{-c}\rho,\nu^c\rho])\rtimes\sigma_2$ such that τ' is a subrepresentation of $\delta([\nu^a\rho,\nu^{-a}\rho])\rtimes\tau''$.

Using [19, Section 1], or [13, Theorem 2.2.(iii), (iv)] we deduce that $\delta([\nu^a\rho,\nu^{-a}\rho])\rtimes\tau''$ is a direct sum of two mutually non-isomorphic irreducible tempered representations.

Note that τ'' is a subrepresentation of $\delta([\nu^{-a+1}\rho,\nu^b\rho])\times\delta([\nu^{-c}\rho,\ \nu^c\rho])\rtimes\sigma_1$. Since τ' is not a subrepresentation of an induced representation of the form $\delta([\nu^{z+1}\rho,\nu^c\rho])\times\delta([\nu^{z+1}\rho,\nu^c\rho])\rtimes\pi$, in the same way as in the proof of the previous lemma we deduce that τ'' is an irreducible subrepresentation of $\delta([\nu^{-a+1}\rho,\nu^b\rho])\rtimes\tau$.

Since $[-2a+1,2b+1]\cap\mathrm{Jord}_\rho(\sigma_1)=\{-2a+1\}$, it follows that $\mu^*(\sigma_1)$ does not contain an irreducible constituent of the form $\nu^y\rho\otimes\pi$ for $y\in\{-a+1,-a+2,\dots,b\}$. Using $c>b$ and the structural formula, we conclude that $\delta([\nu^{-a+1}\rho,\nu^b\rho])\otimes\tau$ is a unique irreducible constituent of $\mu^*(\delta([\nu^{-a+1}\rho,\nu^b\rho])\rtimes\tau)$ of the form $\delta([\nu^{-a+1}\rho,\nu^b\rho])\otimes\pi$, and appears there with multiplicity one.

It follows from [19, Section 1] or [13, Theorem 2.2.(iii)], that the induced representation $\delta([\nu^a\rho,\nu^{-a}\rho])\rtimes\tau$ is irreducible, so τ' is a unique irreducible tempered subrepresentation of $\delta([\nu^a\rho,\nu^{-a}\rho])\rtimes\tau''$ which contains an irreducible constituent of the form $\delta([\nu^{-a+1}\rho,\nu^b\rho])\otimes\pi$ in the Jacquet module with respect to the appropriate parabolic subgroup.

From

$$\tau'\hookrightarrow\delta([\nu^a\rho,\nu^{-a}\rho])\times\delta([\nu^{-a+1}\rho,\nu^b\rho])\rtimes\tau$$

we conclude that either

$$\tau'\hookrightarrow\delta([\nu^a\rho,\nu^b\rho])\rtimes\tau$$

or

$$\tau'\hookrightarrow L(\delta([\nu^a\rho,\nu^{-a}\rho]),\delta([\nu^{-a+1}\rho,\nu^b\rho]))\rtimes\tau.$$

Since $\mu^*(\tau')$ contains an irreducible constituent of the form $\delta([\nu^{-a+1}\rho,\nu^b\rho])\otimes\pi$, $c>b$, and $[-2a+1,2b+1]\cap \mathrm{Jord}_\rho(\sigma_1)=\{-2a+1\}$, we obtain $\tau'\leq \delta([\nu^a\rho,\nu^b\rho])\rtimes\tau$. This ends the proof. □

In the rest of the section, suppose that $a\leq 0$, and let $c>0$ be such that $-a-c$ is a positive integer and $2c+1\notin \mathrm{Jord}_\rho(\sigma_1)$. Also, let $2x_m+1$ stand for the minimal element of $\mathrm{Jord}_\rho(\sigma_1)$ such that $x_m>c$, and denote by τ a unique irreducible subrepresentation of $\delta([\nu^{-c}\rho,\nu^c\rho])\rtimes\sigma_1$ such that τ is not a subrepresentation of an induced representation of the form $\delta([\nu^{c+1}\rho,\nu^{x_m}\rho])\rtimes\pi$.

LEMMA 3.8. *Suppose that $2a+1\notin \mathrm{Jord}_\rho(\sigma_1)$, but $\langle -2a+1,2b+1\rangle\cap \mathrm{Jord}_\rho(\sigma_1)\neq\emptyset$, and let $2y+1=\min(\langle -2a+1,2b+1\rangle\cap \mathrm{Jord}_\rho(\sigma_1))$. Let σ_2 stand for a unique discrete series such that σ_1 is a subrepresentation of $\delta([\nu^{-a+1}\rho,\nu^y\rho])\rtimes\sigma_2$, and let τ' stand for a unique irreducible subrepresentation of $\delta([\nu^{-c}\rho,\nu^c\rho])\rtimes\sigma_2$ which is not a subrepresentation of an induced representation of the form $\delta([\nu^{c+1}\rho,\nu^z\rho])\rtimes\pi$ for $2z+1=\min\{2x+1\in \mathrm{Jord}_\rho(\sigma_2): x>c\}$. Then $L(\delta([\nu^{-b}\rho,\nu^y\rho]);\tau')$ is an irreducible subquotient of $\delta([\nu^a\rho,\nu^b\rho])\rtimes\tau$.*

PROOF. Note that $z=x_m$ if $x_m<y$, and $z=-a$ otherwise, i.e., if $x_m=y$.

Since $-a>c$, we have the following embeddings and an isomorphism:

$$\begin{aligned}\tau &\hookrightarrow \delta([\nu^{-c}\rho,\nu^c\rho])\rtimes\sigma_1\\ &\hookrightarrow \delta([\nu^{-c}\rho,\nu^c\rho])\times\delta([\nu^{-a+1}\rho,\nu^y\rho])\rtimes\sigma_2\\ &\cong \delta([\nu^{-a+1}\rho,\nu^y\rho])\times\delta([\nu^{-c}\rho,\nu^c\rho])\rtimes\sigma_2.\end{aligned}$$

By Lemma 2.3, there is an irreducible subquotient π of $\delta([\nu^{-c}\rho,\nu^c\rho])\rtimes\sigma_2$ such that τ is a subrepresentation of $\delta([\nu^{-a+1}\rho,\nu^y\rho])\rtimes\pi$. Let us prove that $\pi\cong\tau'$. Otherwise, $\pi\cong\tau''$, where τ'' is a unique irreducible subrepresentation of $\delta([\nu^{-c}\rho,\nu^c\rho])\rtimes\sigma_2$ which is also a subrepresentation of an induced representation of the form $\delta([\nu^{c+1}\rho,\nu^z\rho])\rtimes\pi'$. This gives an embedding

$$\tau\hookrightarrow\delta([\nu^{-a+1}\rho,\nu^y\rho])\times\delta([\nu^{c+1}\rho,\nu^z\rho])\rtimes\pi'.$$

If $x_m<y$, we have $z=x_m$ and $z<-a$, so

$$\delta([\nu^{-a+1}\rho,\nu^y\rho])\times\delta([\nu^{c+1}\rho,\nu^z\rho])\cong\delta([\nu^{c+1}\rho,\nu^z\rho])\times\delta([\nu^{-a+1}\rho,\nu^y\rho]),$$

and τ is a subrepresentation of $\delta([\nu^{c+1}\rho,\nu^z\rho])\times\delta([\nu^{-a+1}\rho,\nu^y\rho])\rtimes\pi'$, a contradiction.

If $x_m=y$, we have $z=-a$ and, by Lemma 2.3, either

$$\tau\hookrightarrow\delta([\nu^{c+1}\rho,\nu^{x_m}\rho])\rtimes\pi'$$

or

$$\tau\hookrightarrow L(\delta([\nu^{c+1}\rho,\nu^{-a}\rho]),\delta([\nu^{-a+1}\rho,\nu^{x_m}\rho]))\rtimes\pi'.$$

If τ is a subrepresentation of $L(\delta([\nu^{c+1}\rho,\nu^{-a}\rho]),\delta([\nu^{-a+1}\rho,\nu^{x_m}\rho])\rtimes\pi'$, it follows that $\mu^*(\tau)$ contains an irreducible constituent of the form $\nu^{-a}\rho\otimes\pi''$, which is impossible since $c<-a$ and $-2a+1\notin \mathrm{Jord}_\rho(\sigma_1)$. Thus, τ is a subrepresentation of $\delta([\nu^{c+1}\rho,\nu^{x_m}\rho])\rtimes\pi'$, a contradiction.

Consequently, τ is a subrepresentation of $\delta([\nu^{-a+1}\rho,\nu^{y}\rho])\rtimes\tau'$.

Since τ' is a subrepresentation of $\delta([\nu^{-c}\rho,\nu^{c}\rho])\rtimes\sigma_2$, $c<-a$, and $[-2a+3,2y+1]\cap \mathrm{Jord}_\rho(\sigma_2)=\emptyset$, it follows from Theorem 2.2 and [16, Lemma 3.6] that $\mu^*(\tau')$ does not contain an irreducible constituent of the form $\nu^d\rho\otimes\pi'$ for $d\in[-a+1,y]$. It is now easy to see, using Theorem 2.2 again, that $\delta([\nu^{-a+1}\rho,\nu^{y}\rho])\otimes\tau'$ is a unique irreducible constituent of the form $\delta([\nu^{-a+1}\rho,\nu^{y}\rho])\otimes\pi'$ appearing in $\mu^*(\delta([\nu^{-a+1}\rho,\nu^{y}\rho])\rtimes\tau')$, and it appears there with multiplicity one. Thus, τ is a unique irreducible subquotient of $\delta([\nu^{-a+1}\rho,\nu^{y}\rho])\rtimes\tau'$ which contains an irreducible constituent of the form $\delta([\nu^{-a+1}\rho,\nu^{y}\rho])\otimes\pi'$ in the Jacquet module with respect to the appropriate parabolic subgroup.

We have

$$\begin{aligned} L(\delta([\nu^{-b}\rho,\nu^{y}\rho]);\tau')&\hookrightarrow \delta([\nu^{-a+1}\rho,\nu^{y}\rho])\times\delta([\nu^{-b}\rho,\nu^{-a}\rho])\rtimes\tau'\\ &=\delta([\nu^{a}\rho,\nu^{b}\rho])\times\delta([\nu^{-a+1}\rho,\nu^{y}\rho])\rtimes\tau', \end{aligned}$$

so the Frobenius reciprocity implies that $\mu^*(L(\delta([\nu^{-b}\rho,\nu^{y}\rho]);\tau'))$ contains an irreducible constituent of the form $\delta([\nu^{-a+1}\rho,\nu^{y}\rho])\otimes\pi'$. There is an irreducible subquotient π'' of $\delta([\nu^{-a+1}\rho,\nu^{y}\rho])\rtimes\tau'$ such that $L(\delta([\nu^{-b}\rho,\nu^{y}\rho]);\tau')\le\delta([\nu^{a}\rho,\nu^{b}\rho])\rtimes\pi''$. Since $b>y$, Theorem 2.2 implies that $\mu^*(\pi'')$ contains an irreducible constituent of the form $\delta([\nu^{-a+1}\rho,\nu^{y}\rho])\otimes\pi'$, so $\pi''\cong\tau$, and the lemma is proved. □

LEMMA 3.9. *Suppose that* $[-2a+1,2b+1]\cap\mathrm{Jord}_\rho(\sigma_1)=\{2b+1\}$. *Let* σ_2 *stand for a unique discrete series such that* σ_1 *is a subrepresentation of* $\delta([\nu^{-a+1}\rho,\nu^{b}\rho])\rtimes\sigma_2$, *and let* τ' *stand for a unique irreducible subrepresentation of* $\delta([\nu^{-b}\rho,\nu^{b}\rho])\times\delta([\nu^{-c}\rho,\nu^{c}\rho])\rtimes\sigma_2$ *which is a subrepresentation of an induced representation of the form* $\delta([\nu^{-a+1}\rho,\nu^{b}\rho])\times\delta([\nu^{-a+1}\rho,\nu^{b}\rho])\rtimes\pi$, *and is not a subrepresentation of an induced representation of the form* $\delta([\nu^{c+1}\rho,\nu^{z}\rho])\rtimes\pi$ *for* $2z+1=\min\{2x+1\in\mathrm{Jord}_\rho(\sigma_2):x>c\}$. *Then* τ' *is an irreducible subquotient of* $\delta([\nu^{a}\rho,\nu^{b}\rho])\rtimes\tau$.

PROOF. By [22, Theorem 8.2.], there is a discrete series σ_3 such that σ_2 is an irreducible subrepresentation of $\delta([\nu^{c+1}\rho,\nu^{z}\rho])\rtimes\sigma_3$. Note that $2c+1\in\mathrm{Jord}_\rho(\sigma_3)$, so $\delta([\nu^{-c}\rho,\nu^{c}\rho])\rtimes\sigma_3$ is irreducible. Since $\mu^*(\sigma_3)$ does not contain an irreducible constituent of the form $\nu^y\rho\otimes\pi$ for $y\in\{c+1,c+2,\dots,z\}$, Theorem 2.2 implies that $\delta([\nu^{c+1}\rho,\nu^{z}\rho])\otimes\delta([\nu^{-c}\rho,\nu^{c}\rho])\rtimes\sigma_3$ is a unique irreducible constituent of $\mu^*(\delta([\nu^{-c}\rho,\nu^{c}\rho])\rtimes\sigma_2)$ of the form $\delta([\nu^{c+1}\rho,\nu^{z}\rho])\otimes\pi$ and appears there with multiplicity one. Thus, there is a unique irreducible tempered subrepresentation of $\delta([\nu^{-c}\rho,\nu^{c}\rho])\rtimes\sigma_2$ which contains an irreducible constituent of the form $\delta([\nu^{c+1}\rho,\nu^{z}\rho])\otimes\pi$ in the Jacquet module with respect

to the appropriate parabolic subgroup. It can be seen in the same way as in the proof of [22, Lemma 4.1] that such an irreducible tempered subrepresentation is also a subrepresentation of an induced representation of the form $\delta([\nu^{c+1}\rho,\nu^z\rho])\rtimes\pi$.

Since τ' is a subrepresentation of $\delta([\nu^{-b}\rho,\nu^b\rho])\times\delta([\nu^{-c}\rho,\nu^c\rho])\rtimes\sigma_2$, by Lemma 2.3 there is an irreducible tempered subrepresentation τ'' of $\delta([\nu^{-c}\rho,\nu^c\rho])\rtimes\sigma_2$ such that τ' is a subrepresentation of $\delta([\nu^{-b}\rho,\nu^b\rho])\rtimes\tau''$.

If τ'' is a subrepresentation of an induced representation of the form $\delta([\nu^{c+1}\rho,\nu^z\rho])\rtimes\pi$, using $z\le b$ and an easy commuting argument we obtain that τ' is also a subrepresentation of an induced representation of such a form, contrary to our assumption. Thus, τ'' is a unique irreducible tempered subrepresentation of $\delta([\nu^{-c}\rho,\ \nu^c\rho])\rtimes\sigma_2$ which is not a subrepresentation of an induced representation of the form $\delta([\nu^{c+1}\rho,\nu^z\rho])\rtimes\pi$.

We have

$$\tau'\le\delta([\nu^{-b}\rho,\nu^b\rho])\rtimes\tau''\le\delta([\nu^a\rho,\nu^b\rho])\times\delta([\nu^{-a+1}\rho,\nu^b\rho])\rtimes\tau''$$

and there is an irreducible subquotient π_1 of $\delta([\nu^{-a+1}\rho,\nu^b\rho])\rtimes\tau''$ such that τ' is contained in $\delta([\nu^a\rho,\nu^b\rho])\rtimes\pi_1$. Since $\mu^*(\tau')$ contains an irreducible constituent of the form $\delta([\nu^{-a+1}\rho,\nu^b\rho])\times\delta([\nu^{-a+1}\rho,\nu^b\rho])\otimes\pi$, we deduce that $\mu^*(\pi_1)$ contains an irreducible constituent of the form $\delta([\nu^{-a+1}\rho,\nu^b\rho])\otimes\pi$.

On the other hand, we have the following embeddings and an isomorphism:

$$\begin{aligned}\tau&\hookrightarrow\delta([\nu^{-c}\rho,\nu^c\rho])\rtimes\sigma_1\\&\hookrightarrow\delta([\nu^{-c}\rho,\nu^c\rho])\times\delta([\nu^{-a+1}\rho,\nu^b\rho])\rtimes\sigma_2\\&\cong\delta([\nu^{-a+1}\rho,\nu^b\rho])\times\delta([\nu^{-c}\rho,\nu^c\rho])\rtimes\sigma_2,\end{aligned}$$

and there is an irreducible subquotient π_2 of $\delta([\nu^{-c}\rho,\nu^c\rho])\rtimes\sigma_2$ such that τ is a subrepresentation of $\delta([\nu^{-a+1}\rho,\nu^b\rho])\rtimes\pi_2$.

Suppose that $\pi_2\ncong\tau''$. Then we have

$$\tau\hookrightarrow\delta([\nu^{-a+1}\rho,\nu^b\rho])\times\delta([\nu^{c+1}\rho,\nu^z\rho])\rtimes\pi,$$

for some irreducible representation π.

If $z<-a$, we have $z=x_m$ and

$$\delta([\nu^{-a+1}\rho,\nu^b\rho])\times\delta([\nu^{c+1}\rho,\nu^{x_m}\rho])\cong\delta([\nu^{c+1}\rho,\nu^{x_m}\rho])\times\delta([\nu^{-a+1}\rho,\nu^b\rho]),$$

which contradicts the definition of τ.

If $z=-a$, we have $x_m=b$ and either

$$\tau\hookrightarrow L(\delta([\nu^{c+1}\rho,\nu^{-a}\rho]),\delta([\nu^{-a+1}\rho,\nu^{x_m}\rho]))\rtimes\pi$$

or

$$\tau\hookrightarrow\delta([\nu^{c+1}\rho,\nu^{x_m}\rho])\rtimes\pi.$$

Since τ is a subrepresentation of $\delta([\nu^{-c}\rho,\nu^{c}\rho])\rtimes\sigma_1$, $c<-a$, and $-2a+1\notin \mathrm{Jord}_\rho(\sigma_1)$, it follows that $\mu^*(\tau)$ does not contain an irreducible constituent of the form $\nu^{-a}\rho\otimes\pi'$. This leads to $\tau\hookrightarrow\delta([\nu^{c+1}\rho,\nu^{x_m}\rho])\rtimes\pi$, contradicting the definition of τ. Consequently, τ is a subrepresentation of $\delta([\nu^{-a+1}\rho,\nu^{b}\rho])\rtimes\tau''$.

Since $[-2a+1,2b+1]\cap \mathrm{Jord}_\rho(\sigma_2)=\emptyset$, we obtain that $\mu^*(\tau'')$ does not contain an irreducible constituent of the form $\nu^{y}\rho\otimes\pi'$ for $y\in\{-a+1,-a+2,\dots,b\}$. An easy application of Theorem 2.2 implies that $\delta([\nu^{-a+1}\rho,\nu^{b}\rho])\otimes\tau''$ is a unique irreducible constituent of $\mu^*(\delta([\nu^{-a+1}\rho,\nu^{b}\rho])\rtimes\tau'')$ of the form $\delta([\nu^{-a+1}\rho,\nu^{b}\rho])\otimes\pi$, and appears there with multiplicity one.

Using the Frobenius reciprocity we conclude that τ is a unique irreducible subquotient of $\delta([\nu^{-a+1}\rho,\nu^{b}\rho])\rtimes\tau''$ which contains an irreducible constituent of the form $\delta([\nu^{-a+1}\rho,\nu^{b}\rho])\otimes\pi$ in the Jacquet module with respect to the appropriate parabolic subgroup, so $\pi_1\cong\tau$ and the lemma is proved. □

4. Reducibility

Through this section we fix an irreducible cuspidal F'/F-selfdual representation $\rho\in R(GL)$, and a discrete series $\sigma\in R(G)$. Let $\alpha\geq 0$ be such that $\nu^{\alpha}\rho\rtimes\sigma_{cusp}$ reduces. We also fix a negative real number a such that $a-\alpha$ is an integer, and positive integers k and n such that $a+k>-a$.

Note that in $R(G)$ we have

$$L(\delta([\nu^{-a-k-n+1}\rho,\nu^{-a-n+1}\rho]),\dots,\delta([\nu^{-a-k}\rho,\nu^{-a}\rho]);\sigma)\hookrightarrow$$
$$L(\delta([\nu^{-a-k-n+1}\rho,\nu^{-a-n+1}\rho]),\dots,\delta([\nu^{-a-k}\rho,\nu^{-a}\rho]))\rtimes\sigma=$$
$$L(\delta([\nu^{a}\rho,\nu^{a+k}\rho]),\dots,\delta([\nu^{a+n-1}\rho,\nu^{a+k+n-1}\rho]))\rtimes\sigma.$$

In this section we prove that the induced representation

$$L(\delta([\nu^{a}\rho,\nu^{a+k}\rho]),\delta([\nu^{a+1}\rho,\nu^{a+k+1}\rho]),\dots,\delta([\nu^{a+n-1}\rho,\nu^{a+k+n-1}\rho]))\rtimes\sigma$$

reduces when there is an $i\in\{0,1,\dots,n-1\}$ such that $\delta([\nu^{a+i}\rho,\nu^{a+k+i}\rho])\rtimes\sigma$ reduces, by showing that in such a case there is an irreducible subquotient of $L(\delta([\nu^{a}\rho,\nu^{a+k}\rho]),\dots,\delta([\nu^{a+n-1}\rho,\nu^{a+k+n-1}\rho]))\rtimes\sigma$ different than

$$L(\delta([\nu^{-a-k-n+1}\rho,\nu^{-a-n+1}\rho]),\dots,\delta([\nu^{-a-k}\rho,\nu^{-a}\rho]);\sigma).$$

Thus, suppose that there is an $i\in\{0,1,\dots,n-1\}$ such that the induced representation $\delta([\nu^{a+i}\rho,\nu^{a+k+i}\rho])\rtimes\sigma$ reduces and let us denote the minimal such i by m.

Let us first consider the case $m=0$. This is handled in the following proposition:

Proposition 4.1. *Suppose that $\delta([\nu^{a}\rho,\nu^{a+k}\rho])\rtimes\sigma$ reduces. Then the induced representation $L(\delta([\nu^{a}\rho,\nu^{a+k}\rho]),\dots,\delta([\nu^{a+n-1}\rho,\nu^{a+k+n-1}\rho]))\rtimes\sigma$ also reduces.*

PROOF. We construct an irreducible subquotient of

$$L(\delta([\nu^a\rho,\nu^{a+k}\rho]),\dots,\delta([\nu^{a+n-1}\rho,\nu^{a+k+n-1}\rho]))\rtimes\sigma,$$

different than

$$L(\delta([\nu^{-a-k-n+1}\rho,\nu^{-a-n+1}\rho]),\dots,\delta([\nu^{-a-k}\rho,\nu^{-a}\rho]);\sigma),$$

using a case-by-case consideration.

- Suppose that $[-2a+1,2(a+k)+1]\cap \mathrm{Jord}_\rho(\sigma)=\emptyset$.

By the classification of discrete series, $\delta([\nu^a\rho,\nu^{a+k}\rho])\rtimes\sigma$ contains two mutually non-isomorphic discrete series, which we denote by σ_1 and σ_2. Let π stand for

$$L(\delta([\nu^{-a-k-n+1}\rho,\nu^{-a-n+1}\rho]),\dots,\delta([\nu^{-a-k-1}\rho,\nu^{-a-1}\rho]);\sigma_1).$$

- Suppose that $[-2a+1,2(a+k)+1]\cap \mathrm{Jord}_\rho(\sigma)\neq\emptyset$ and $-2a+1\notin \mathrm{Jord}_\rho(\sigma)$.

Let $2x_m+1=\min([-2a+1,2(a+k)+1]\cap \mathrm{Jord}_\rho(\sigma))$, and let σ' denote a discrete series such that σ is a unique irreducible subrepresentation of $\delta([\nu^{-a+1}\rho,\nu^{x_m}\rho])\rtimes\sigma'$. If $x_m<a+k$, let π stand for

$$L(\delta([\nu^{-a-k-n+1}\rho,\nu^{-a-n+1}\rho]),\dots,\delta([\nu^{-a-k-1}\rho,\nu^{-a-1}\rho]),\delta([\nu^{-a-k}\rho,\nu^{x_m}\rho]);\sigma').$$

By the proof of [12, Lemma 3.2], $L(\delta([\nu^{-a-k}\rho,\nu^{x_m}\rho]);\sigma')\leq\delta([\nu^a\rho,\nu^{a+k}\rho])\rtimes\sigma$.

If $x_m=a+k$, let π stand for

$$L(\delta([\nu^{-a-k-n+1}\rho,\nu^{-a-n+1}\rho]),\dots,\delta([\nu^{-a-k-1}\rho,\nu^{-a-1}\rho]);\tau),$$

where τ is an irreducible subrepresentation of $\delta([\nu^{-a-k}\rho,\nu^{a+k}\rho])\rtimes\sigma'$ such that $\mu^*(\tau)$ contains an irreducible constituent of the form $\delta([\nu^{-a+1}\rho,\nu^{a+k}\rho])\times\delta([\nu^{-a+1}\rho,\nu^{a+k}\rho])\otimes\pi'$. By the proof of [12, Lemma 3.2], $\tau\leq\delta([\nu^a\rho,\nu^{a+k}\rho])\rtimes\sigma$.

- Suppose that $[-2a+1,2(a+k)+1]\cap \mathrm{Jord}_\rho(\sigma)\neq\emptyset$ and $-2(a+k)+1\notin \mathrm{Jord}_\rho(\sigma)$.

Let $2x_M+1=\max([-2a+1,2(a+k)+1]\cap \mathrm{Jord}_\rho(\sigma))$, and let σ' stand for a unique discrete series subrepresentation of $\delta([\nu^{x_M+1}\rho,\nu^{a+k}\rho])\rtimes\sigma$. If $x_M>-a$, let π stand for

$$L(\delta([\nu^{-a-k-n+1}\rho,\nu^{-a-n+1}\rho]),\dots,\delta([\nu^{-a-k-1}\rho,\nu^{-a-1}\rho]),\delta([\nu^{-x_M}\rho,\nu^{-a}\rho]);\sigma').$$

By the proof of [12, Lemma 3.2], $L(\delta([\nu^{-x_M}\rho,\nu^{-a}\rho]);\sigma')\leq\delta([\nu^a\rho,\nu^{a+k}\rho])\rtimes\sigma$.

If $x_M=-a$, let π stand for

$$L(\delta([\nu^{-a-k-n+1}\rho,\nu^{-a-n+1}\rho]),\dots,\delta([\nu^{-a-k-1}\rho,\nu^{-a-1}\rho]);\tau),$$

where τ is an irreducible tempered subrepresentation of $\delta([\nu^a\rho,\nu^{-a}\rho])\rtimes\sigma'$ such that $\mu^*(\tau)$ contains an irreducible constituent of the form $\delta([\nu^{-a+1}\rho,\nu^{a+k}\rho])\otimes\pi'$. By the proof of [12, Lemma 3.2], $\tau\leq\delta([\nu^a\rho,\nu^{a+k}\rho])\rtimes\sigma$.

- Suppose that $\{-2a+1, 2(a+k)+1\} \subseteq \mathrm{Jord}_\rho(\sigma)$ and there is $2x+1 \in \mathrm{Jord}_\rho(\sigma) \cap \langle -2a+1, 2(a+k)+1]$ such that $(2x+1)_$ is defined and $\epsilon_\sigma(((2x+1)_, \rho), (2x+1, \rho)) = 1$.

We denote by $2y+1$ the minimal element of $\mathrm{Jord}_\rho(\sigma) \cap \langle -2a+1, 2(a+k)+1]$ such that $(2y+1)_$ is defined and $\epsilon_\sigma(((2y+1)_, \rho), (2y+1, \rho)) = 1$.

If $(2y+1)_ = -2a+1$, let τ denote an irreducible tempered representation such that σ is a subrepresentation of $\delta([\nu^{-a+1}\rho, \nu^y\rho]) \rtimes \tau$. If $y < a+k$, let π stand for

$$L(\delta([\nu^{-a-k-n+1}\rho, \nu^{-a-n+1}\rho]), \dots, \delta([\nu^{-a-k-1}\rho, \nu^{-a-1}\rho]), \delta([\nu^{-a-k}\rho, \nu^y\rho]); \tau),$$

By the proof of [12, Lemma 3.4], $L(\delta([\nu^{-a-k}\rho, \nu^y\rho]); \tau) \leq \delta([\nu^a\rho, \nu^{a+k}\rho]) \rtimes \sigma$.

If $(2y+1)_ = -2a+1$ and $y = a+k$, let τ denote an irreducible tempered representation such that σ is a subrepresentation of $\delta([\nu^{-a+1}\rho, \nu^{a+k}\rho]) \rtimes \tau$ and let τ' stand for a unique irreducible tempered subrepresentation of $\delta([\nu^{-a-k}\rho, \nu^{a+k}\rho]) \rtimes \tau$ such that $\mu^*(\tau')$ contains an irreducible constituent of the form $\delta([\nu^{-a+1}\rho, \nu^{a+k}\rho]) \times \delta([\nu^{-a+1}\rho, \nu^{a+k}\rho]) \otimes \pi'$. We define

$$\pi = L(\delta([\nu^{-a-k-n+1}\rho, \nu^{-a-n+1}\rho]), \dots, \delta([\nu^{-a-k-1}\rho, \nu^{-a-1}\rho]); \tau').$$

By the proof of [12, Lemma 3.4], we have $\tau' \leq \delta([\nu^a\rho, \nu^{a+k}\rho]) \rtimes \sigma$.

Let us now suppose that $(2y+1)_ > -2a+1$ and let $(2y+1)_ = 2x+1$. We denote by σ' a discrete series such that σ is a subrepresentation of $\delta([\nu^{-x}\rho, \nu^y\rho]) \rtimes \sigma'$. If $y < a+k$, let π stand for

$$L(\delta([\nu^{-a-k-n+1}\rho, \nu^{-a-n+1}\rho]), \dots, \delta([\nu^{-a-k-1}\rho, \nu^{-a-1}\rho]),$$
$$\delta([\nu^{-a-k}\rho, \nu^y\rho]), \delta([\nu^{-x}\rho, \nu^{-a}\rho]); \sigma'),$$

By the proof of [12, Lemma 3.4], $L(\delta([\nu^{-a-k}\rho, \nu^y\rho]), \delta([\nu^{-x}\rho, \nu^{-a}\rho]); \sigma') \leq \delta([\nu^a\rho, \nu^{a+k}\rho]) \rtimes \sigma$.

If $y = a+k$, let τ denote a unique irreducible tempered subrepresentation of $\delta([\nu^{x+1}\rho, \nu^{a+k}\rho]) \rtimes \sigma$, given by [12, Lemma 3.3], and let π stand for

$$L(\delta([\nu^{-a-k-n+1}\rho, \nu^{-a-n+1}\rho]), \dots, \delta([\nu^{-a-k-1}\rho, \nu^{-a-1}\rho]), \delta([\nu^{-x}\rho, \nu^{-a}\rho]); \tau),$$

By the proof of [12, Lemma 3.4], $L(\delta([\nu^{-x}\rho, \nu^{-a}\rho]); \tau) \leq \delta([\nu^a\rho, \nu^{a+k}\rho]) \rtimes \sigma$.

It can be seen, using a repeated application of Lemma 3.3, that π is an irreducible subquotient of $L(\delta([\nu^a\rho, \nu^{a+k}\rho]), \dots, \delta([\nu^{a+n-1}\rho, \nu^{a+k+n-1}\rho])) \rtimes \sigma$, details being left to the reader. ∎

Let us now consider the more interesting case $m \geq 1$. It follows that $\mathrm{Jord}_\rho(\sigma) \neq \emptyset$, since otherwise $\delta([\nu^a\rho, \nu^{a+k}\rho]) \rtimes \sigma$ reduces by the classification of discrete series.

Using [12, Theorems 3.5, 4.6, 5.4], we deduce the following:

(1) $2(a+k+i)+1 \in \mathrm{Jord}_\rho(\sigma)$ for $i = 0, 1, \dots, m-1$ and $-2(a+i)+1 \in \mathrm{Jord}_\rho(\sigma)$ for $i = 0, 1, \dots, m-1$ such that $a+i \leq 0$,

(2) $\epsilon_\sigma(2(a+k+i)+1, 2(a+k+i)+3) = -1$ for $i = 0, 1, \dots, m-2$,

(3) $\epsilon_\sigma(-2(a+i)+1,-2(a+i)+3)=-1$ for $i=0,1,\dots,m-2$ such that $a+i\leq 0$,
(4) $\epsilon_\sigma((2(a+k)+1)_{_},2(a+k)+1)=-1$,
(5) $\epsilon_\sigma(-2a+1,2x+1)=-1$ for $2x+1\in \mathrm{Jord}_\rho(\sigma)$ such that $(2x+1)_{_}=-2a+1$.

Since $\delta([\nu^{a+m}\rho,\nu^{a+k+m}\rho])\rtimes\sigma$ reduces, some of the following also holds:

(1) $2(a+k+m)+1\notin \mathrm{Jord}_\rho(\sigma)$,
(2) $-2(a+m)+1\notin \mathrm{Jord}_\rho(\sigma)$ and $a+m\leq 0$,
(3) $2(a+k+m)+1\in \mathrm{Jord}_\rho(\sigma)$ and $\epsilon_\sigma(2(a+k+m)-1,2(a+k+m)+1)=1$,
(4) $-2(a+m)+1\in \mathrm{Jord}_\rho(\sigma)$, $a+m\leq 0$, and $\epsilon_\sigma(-2(a+m)+1,-2(a+m)+3)=1$.

In the sequel, we prove that the induced representation

$$L(\delta([\nu^a\rho,\nu^{a+k}\rho]),\dots,\delta([\nu^{a+n-1}\rho,\nu^{a+k+n-1}\rho]))\rtimes\sigma$$

reduces considering each of the cases $(1)-(4)$ separately.

PROPOSITION 4.2. *Suppose that* $2(a+k+m)+1\notin \mathrm{Jord}_\rho(\sigma)$. *Then* $L(\delta([\nu^a\rho,\ \nu^{a+k}\rho]),\ \dots,\delta([\nu^{a+n-1}\rho,\nu^{a+k+n-1}\rho]))\rtimes\sigma$ *reduces.*

PROOF. Let us denote $(2(a+k)+1)_{_}$ by $2x+1$. We consider two possibilities separately.

First we assume that $2x+1>-2a+1$.

We define $\sigma^{(0)}=\sigma$ and, for $i=1,2,\dots,m$ let $\sigma^{(i)}$ stand for a unique discrete series subrepresentation of $\nu^{a+k+m-i+1}\rho\rtimes\sigma^{(i-1)}$, which can be obtained using the proof of [13, Lemma 3.2], based on [22, Theorem 8.2]. Also, let $\sigma^{(m+1)}$ denote a unique discrete series subrepresentation of $\delta([\nu^{x+1}\rho,\nu^{a+k}\rho])\rtimes\sigma^{(m)}$, also given by the proof of [13, Lemma 3.2].

It follows that $\sigma^{(i)}$ is a subrepresentation of

$$\nu^{a+k+m-i+1}\rho\times\cdots\times\nu^{a+k+m}\rho\rtimes\sigma$$

for $i=1,2,\dots,m$, and that $\sigma^{(m+1)}$ is a subrepresentation of

$$\delta([\nu^{x+1}\rho,\nu^{a+k}\rho])\times\nu^{a+k+1}\rho\times\cdots\times\nu^{a+k+m}\rho\rtimes\sigma.$$

Using $\epsilon_\sigma(2(a+k+i)+1,2(a+k+i)+3)=-1$ for $i=0,1,\dots,m-2$, $\epsilon_\sigma((2x+1,\rho),(2(a+k)+1,\rho))=-1$, together with [22, Theorem 8.2, Proposition 7.2], we obtain that for $j=1,2,\dots,m$, $\mu^*(\sigma^{(j)})$ contains neither an irreducible constituent of the form $\delta([\nu^{x+1}\rho,\nu^{a+k}\rho])\otimes\pi$ nor an irreducible constituent of the form $\nu^y\rho\otimes\pi$ for $y\in\{a+k+1,a+k+2,\dots,a+k+m-j\}$.

We prove that

$$L(\delta([\nu^{-a-k-n+1}\rho,\nu^{-a-n+1}\rho]),\dots,\delta([\nu^{-a-k-m-1}\rho,\nu^{-a-m-1}\rho]),$$
$$\delta([\nu^{-a-k-m+1}\rho,\nu^{-a-m}\rho]),\dots,\delta([\nu^{-a-k}\rho,\nu^{-a-1}\rho]),\delta([\nu^{-x}\rho,\nu^{-a}\rho]);\sigma^{(m+1)})$$

is an irreducible subquotient of

$$L(\delta([\nu^a\rho,\nu^{a+k}\rho]),\dots,\delta([\nu^{a+n-1}\rho,\nu^{a+k+n-1}\rho]))\rtimes\sigma.$$

First, it follows from the first part of Lemma 3.4 that $L(\delta([\nu^{-x}\rho,\nu^{-a}\rho]);\sigma^{(m+1)})$ is an irreducible subquotient of $\delta([\nu^{a}\rho,\nu^{a+k}\rho])\rtimes\sigma^{(m)}$. We proceed inductively, and suppose that for every $l\in\{0,1,\dots,m-1\}$ we have

$$L(\delta([\nu^{-a-k-l+1}\rho,\nu^{-a-l}\rho]),\dots,\delta([\nu^{-a-k}\rho,\nu^{-a-1}\rho]),\delta([\nu^{-x}\rho,\nu^{-a}\rho]);\sigma^{(m+1)})$$
$$\leq L(\delta([\nu^{a}\rho,\nu^{a+k}\rho]),\delta([\nu^{a+1}\rho,\nu^{a+k+1}\rho]),\dots,\delta([\nu^{a+l}\rho,\nu^{a+k+l}\rho]))\rtimes\sigma^{(m-l)}.$$

Using Lemma 3.2 we obtain

$$L(\delta([\nu^{-a-k-l}\rho,\nu^{-a-l-1}\rho]),\dots,\delta([\nu^{-a-k}\rho,\nu^{-a-1}\rho]),\delta([\nu^{-x}\rho,\nu^{-a}\rho]);\sigma^{(m+1)})$$
$$\leq L(\delta([\nu^{a}\rho,\nu^{a+k}\rho]),\dots,\delta([\nu^{a+l}\rho,\nu^{a+k+l}\rho]))\rtimes$$
$$L(\delta([\nu^{-a-k-l}\rho,\nu^{-a-l-1}\rho]);\sigma^{(m-l)}).$$

Since $\sigma^{(m-l)}$ is a subrepresentation of $\nu^{a+k+l+1}\rho\rtimes\sigma^{(m-l-1)}$, it follows from parts (1) and (2) of Lemma 3.4 that $L(\delta([\nu^{-a-k-l}\rho,\nu^{-a-l-1}\rho]);\sigma^{(m-l)})$ is an irreducible subquotient of $\delta([\nu^{a+l+1}\rho,\nu^{a+k+l+1}\rho])\rtimes\sigma^{(m-l-1)}$.

Thus,

$$L(\delta([\nu^{-a-k-l}\rho,\nu^{-a-l-1}\rho]),\dots,\delta([\nu^{-a-k}\rho,\nu^{-a-1}\rho]),\delta([\nu^{-x}\rho,\nu^{-a}\rho]);\sigma^{(m+1)})$$

is an irreducible subquotient of

$$L(\delta([\nu^{a}\rho,\nu^{a+k}\rho]),\dots,\delta([\nu^{a+l}\rho,\nu^{a+k+l}\rho]))\times\delta([\nu^{a+l+1}\rho,\nu^{a+k+l+1}\rho])\rtimes\sigma^{(m-l-1)}.$$

Consequently, there is an irreducible subquotient π of

$$L(\delta([\nu^{a}\rho,\nu^{a+k}\rho]),\dots,\delta([\nu^{a+l}\rho,\nu^{a+k+l}\rho]))\times\delta([\nu^{a+l+1}\rho,\nu^{a+k+l+1}\rho])$$

such that

(4.1)
$$L(\delta([\nu^{-a-k-l}\rho,\nu^{-a-l-1}\rho]),\dots,\delta([\nu^{-a-k}\rho,\nu^{-a-1}\rho]),\delta([\nu^{-x}\rho,\nu^{-a}\rho]);\sigma^{(m+1)})$$

is an irreducible subquotient of $\pi\rtimes\sigma^{(m-l-1)}$, and Lemma 3.1 implies that we have either

$$\pi\cong L(\delta([\nu^{a}\rho,\nu^{a+k}\rho]),\dots,\delta([\nu^{a+l}\rho,\nu^{a+k+l}\rho]),\delta([\nu^{a+l+1}\rho,\nu^{a+k+l+1}\rho]))$$

or

$$\pi\cong L(\delta([\nu^{a}\rho,\nu^{a+k}\rho]),\dots,\delta([\nu^{a+l-1}\rho,\nu^{a+k+l-1}\rho]),$$
$$\delta([\nu^{a+l}\rho,\nu^{a+k+l+1}\rho]),\delta([\nu^{a+l+1}\rho,\nu^{a+k+l}\rho])).$$

Since $\sigma^{(m+1)}$ is a subrepresentation of an induced representation of the form $\delta([\nu^{x+1}\rho,\nu^{a+k}\rho])\times\nu^{a+k+1}\rho\times\cdots\times\nu^{a+k+m}\rho\rtimes\pi'$ and $x+1>-a+1$, using standard commuting argument and the Frobenius reciprocity we conclude that the Jacquet module of the representation (4.1) with respect to the appropriate parabolic subgroup contains an irreducible representation of the form

$$\delta([\nu^{-a-k-l}\rho,\nu^{-a-l-1}\rho])\otimes\delta([\nu^{x+1}\rho,\nu^{a+k}\rho])\otimes\nu^{a+k+1}\rho\otimes\cdots\otimes\nu^{a+k+m}\rho\otimes\pi'.$$

Suppose that

$$\begin{aligned}\pi \cong L(\delta([\nu^a\rho,\nu^{a+k}\rho]),\dots,\delta([\nu^{a+l-1}\rho,\nu^{a+k+l-1}\rho]),\\ \delta([\nu^{a+l}\rho,\nu^{a+k+l+1}\rho]),\delta([\nu^{a+l+1}\rho,\nu^{a+k+l}\rho]))\\ \le L(\delta([\nu^a\rho,\nu^{a+k}\rho]),\dots,\delta([\nu^{a+l-1}\rho,\nu^{a+k+l-1}\rho]))\times\\ \delta([\nu^{a+l}\rho,\nu^{a+k+l+1}\rho])\times\delta([\nu^{a+l+1}\rho,\nu^{a+k+l}\rho])\end{aligned}$$

Then the Jacquet module of

$$\begin{aligned}L(\delta([\nu^a\rho,\nu^{a+k}\rho]),\dots,\delta([\nu^{a+l-1}\rho,\nu^{a+k+l-1}\rho]))\times\\ \delta([\nu^{a+l}\rho,\nu^{a+k+l+1}\rho])\times\delta([\nu^{a+l+1}\rho,\nu^{a+k+l}\rho])\rtimes\sigma^{(m-l-1)}\end{aligned}$$

with respect to the appropriate parabolic subgroup contains an irreducible representation of the form

$$\delta([\nu^{-a-k-l}\rho,\nu^{-a-l-1}\rho])\otimes\delta([\nu^{x+1}\rho,\nu^{a+k}\rho])\otimes\nu^{a+k+1}\rho\otimes\cdots\otimes\nu^{a+k+m}\rho\otimes\pi'.$$

Applying the structural formulas appearing in Theorem 2.2, together with the square-integrability of $\sigma^{(m-l-1)}$, on the induced representation

$$\begin{aligned}L(\delta([\nu^a\rho,\nu^{a+k}\rho]),\dots,\delta([\nu^{a+l-1}\rho,\nu^{a+k+l-1}\rho]))\times\\ \delta([\nu^{a+l}\rho,\nu^{a+k+l+1}\rho])\times\delta([\nu^{a+l+1}\rho,\nu^{a+k+l}\rho])\rtimes\sigma^{(m-l-1)}\end{aligned}$$

we deduce that an irreducible representation of the form

$$\delta([\nu^{x+1}\rho,\nu^{a+k}\rho])\otimes\nu^{a+k+1}\rho\otimes\cdots\otimes\nu^{a+k+m}\rho\otimes\pi'$$

is contained in the Jacquet module of

$$\begin{aligned}L(\delta([\nu^a\rho,\nu^{a+k}\rho]),\dots,\delta([\nu^{a+l-1}\rho,\nu^{a+k+l-1}\rho]))\times\\ \delta([\nu^{a+l}\rho,\nu^{a+k+l+1}\rho])\rtimes\sigma^{(m-l-1)}\end{aligned}$$

with respect to the appropriate parabolic subgroup. Since $-a<a+k$, $\mu^*(\sigma^{(m-l-1)})$ contains neither an irreducible constituent of the form $\delta([\nu^{x+1}\rho,\nu^{a+k}\rho])\otimes\pi''$ nor of the form $\nu^y\rho\otimes\pi'$ for $y\in\{a+k+1,a+k+2,\dots,a+k+l+1\}$, and a repeated application of Theorem 2.2 implies that an irreducible representation of the form

$$\nu^{a+k+l}\rho\otimes\cdots\otimes\nu^{a+k+m}\rho\otimes\pi'$$

is contained in the Jacquet module of

$$\begin{aligned}L(\delta([\nu^a\rho,\nu^{x-1}\rho]),\delta([\nu^{a+1}\rho,\nu^{a+k}\rho]),\dots,\delta([\nu^{a+l-1}\rho,\nu^{a+k+l-1}\rho]))\times\\ \delta([\nu^{a+l}\rho,\nu^{a+k+l+1}\rho])\rtimes\sigma^{(m-l-1)},\end{aligned}$$

with respect to the appropriate parabolic subgroup, which is impossible. Thus,

$$\pi\cong L(\delta([\nu^a\rho,\nu^{a+k}\rho]),\dots,\delta([\nu^{a+l}\rho,\nu^{a+k+l}\rho]),\delta([\nu^{a+l+1}\rho,\nu^{a+k+l+1}\rho])).$$

It follows that

$$L(\delta([\nu^{-a-k-m+1}\rho,\nu^{-a-m}\rho]),\dots,\delta([\nu^{-a-k}\rho,\nu^{-a-1}\rho]),\delta([\nu^{-x}\rho,\nu^{-a}\rho]);\sigma^{(m+1)})$$

is an irreducible subquotient of

$$L(\delta([\nu^{a}\rho,\nu^{a+k}\rho]),\dots,\delta([\nu^{a+m}\rho,\nu^{a+k+m}\rho]))\rtimes\sigma,$$

and the claim of the proposition can be obtained using a repeated application of Lemma 3.3.

Now we consider the second possibility, $2x+1=-2a+1$, i.e., $x=-a$. Again we define $\sigma^{(0)}=\sigma$ and, for $i=1,2,\dots,m$ let $\sigma^{(i)}$ stand for a unique discrete series subrepresentation of $\nu^{a+k+m-i+1}\rho\rtimes\sigma^{(i-1)}$. Let $\sigma^{(m+1)}$ denote a unique discrete series subrepresentation of $\delta([\nu^{-a+1}\rho,\nu^{a+k}\rho])\rtimes\sigma^{(m)}$ and let τ be an irreducible tempered subrepresentation of $\delta([\nu^{a}\rho,\nu^{-a}\rho])\rtimes\sigma^{(m+1)}$ such that $\mu^*(\tau)$ contains an irreducible constituent of the form $\delta([\nu^{-a+1}\rho,\nu^{a+k}\rho])\otimes\pi$. Then we have $\tau\hookrightarrow\delta([\nu^{-a+1}\rho,\nu^{a+k}\rho])\times\delta([\nu^{a}\rho,\nu^{-a}\rho])\rtimes\sigma^{(m)}$.

From the part (2) of Lemma 3.4 follows that τ is an irreducible subquotient of $\delta([\nu^{a}\rho,\nu^{a+k}\rho])\rtimes\sigma^{(m)}$ and it can be proved in the same way as in the case $2x+1>-2a+1$ that

$$L(\delta([\nu^{-a-k-n+1}\rho,\nu^{-a-n+1}\rho]),\dots,\delta([\nu^{-a-k-m-1}\rho,\nu^{-a-m-1}\rho]),$$
$$\delta([\nu^{-a-k-m+1}\rho,\nu^{-a-m}\rho]),\dots,\delta([\nu^{-a-k}\rho,\nu^{-a-1}\rho]);\tau)$$

is an irreducible subquotient of

$$L(\delta([\nu^{a}\rho,\nu^{a+k}\rho]),\dots,\delta([\nu^{a+n-1}\rho,\nu^{a+k+n-1}\rho]))\rtimes\sigma.$$

□

PROPOSITION 4.3. *Suppose that $a+m\leq 0$ and $-2(a+m)+1\notin \mathrm{Jord}_\rho(\sigma)$. Then $L(\delta([\nu^{a}\rho,\ \nu^{a+k}\rho]),\ \dots,\delta([\nu^{a+n-1}\rho,\nu^{a+k+n-1}\rho]))\rtimes\sigma$ reduces.*

PROOF. We denote $(2(a+k)+1)_$ by $2x+1$ and consider two possibilities separately.

First we assume that $2x+1>-2a+1$.

Let us define $\sigma^{(0)}=\sigma$ and, for $i=1,2,\dots,m$, let $\sigma^{(i)}$ denote a unique discrete series such that $\sigma^{(i-1)}$ is a subrepresentation of $\nu^{-a-m+i}\rho\rtimes\sigma^{(i)}$, which can be easily obtained using the proof of [13, Lemma 3.2]. Also, let $\sigma^{(m+1)}$ denote a discrete series such that $\sigma^{(m)}$ is a subrepresentation of $\delta([\nu^{-a+1}\rho,\nu^{x}\rho])\rtimes\sigma^{(m+1)}$, which can also be obtained using the proof of [13, Lemma 3.2].

Using $\epsilon_\sigma(-2(a+i)+1,-2(a+i)+3)=-1$ for $i=0,1,\dots,m-2$, $\epsilon_\sigma((-2a+1,\rho),(2x+1,\rho))=-1$, together with [22, Theorem 8.2, Proposition 7.2], we obtain that for $i=0,1,2,\dots,m-1$, $\mu^*(\sigma^{(i)})$ contains neither an irreducible constituent of the form $\delta([\nu^{-a+1}\rho,\nu^{x}\rho])\otimes\pi$ nor an irreducible constituent of the form $\nu^{y}\rho\otimes\pi$ for $y\in\{-a-m+i+2,-a-m+i+3,\dots,-a\}$.

We prove that

$$L(\delta([\nu^{-a-k-n+1}\rho,\nu^{-a-n+1}\rho]),\dots,\delta([\nu^{-a-k-m-1}\rho,\nu^{-a-m-1}\rho]),$$
$$\delta([\nu^{-a-k-m}\rho,\nu^{-a-m+1}\rho]),\dots,\delta([\nu^{-a-k-1}\rho,\nu^{-a}\rho]),\delta([\nu^{-a-k}\rho,\nu^{x}\rho]);\sigma^{(m+1)})$$

is an irreducible subquotient of

$$L(\delta([\nu^{a}\rho,\nu^{a+k}\rho]),\dots,\delta([\nu^{a+n-1}\rho,\nu^{a+k+n-1}\rho]))\rtimes\sigma.$$

First, it follows from the first part of Lemma 3.5 that $L(\delta([\nu^{-a-k}\rho,\nu^{x}\rho]);\sigma^{(m+1)})$ is an irreducible subquotient of $\delta([\nu^{a}\rho,\nu^{a+k}\rho])\rtimes\sigma^{(m)}$.

We proceed inductively, and suppose that for every $l\in\{0,1,\dots,m-1\}$ we have

$$L(\delta([\nu^{-a-k-l}\rho,\nu^{-a-l+1}\rho]),\dots,\delta([\nu^{-a-k-1}\rho,\nu^{-a}\rho]),\delta([\nu^{-a-k}\rho,\nu^{x}\rho]);\sigma^{(m+1)})$$
$$\leq L(\delta([\nu^{a}\rho,\nu^{a+k}\rho]),\delta([\nu^{a+1}\rho,\nu^{a+k+1}\rho]),\dots,\delta([\nu^{a+l}\rho,\nu^{a+k+l}\rho]))\rtimes\sigma^{(m-l)}.$$

Using Lemma 3.2 we obtain

$$L(\delta([\nu^{-a-k-l-1}\rho,\nu^{-a-l}\rho]),\dots,\delta([\nu^{-a-k-1}\rho,\nu^{-a}\rho]),\delta([\nu^{-a-k}\rho,\nu^{x}\rho]);\sigma^{(m+1)})$$
$$\leq L(\delta([\nu^{a}\rho,\nu^{a+k}\rho]),\dots,\delta([\nu^{a+l}\rho,\nu^{a+k+l}\rho]))$$
$$\rtimes L(\delta([\nu^{-a-k-l-1}\rho,\nu^{-a-l}\rho]);\sigma^{(m-l)}),$$

and, using the first part of Lemma 3.5,

$$L(\delta([\nu^{-a-k-l-1}\rho,\nu^{-a-l}\rho]),\dots,\delta([\nu^{-a-k-1}\rho,\nu^{-a}\rho]),\delta([\nu^{-a-k}\rho,\nu^{x}\rho]);\sigma^{(m+1)})$$
$$\leq L(\delta([\nu^{a}\rho,\nu^{a+k}\rho]),\dots,\delta([\nu^{a+l}\rho,\nu^{a+k+l}\rho]))\times$$
$$\delta([\nu^{a+l+1}\rho,\nu^{a+k+l+1}\rho])\rtimes\sigma^{(m-l-1)}.$$

Using Lemma 3.1, we deduce that there is a

$$\pi\in\{L(\delta([\nu^{a}\rho,\nu^{a+k}\rho]),\dots,\delta([\nu^{a+l+1}\rho,\nu^{a+k+l+1}\rho])),$$
$$L(\delta([\nu^{a}\rho,\nu^{a+k}\rho]),\dots,\delta([\nu^{a+l-1}\rho,\nu^{a+k+l-1}\rho]),$$
$$\delta([\nu^{a+l+1}\rho,\nu^{a+k+l}\rho]),\delta([\nu^{a+l}\rho,\nu^{a+k+l+1}\rho]))\}$$

such that

(4.2)

$$L(\delta([\nu^{-a-k-l-1}\rho,\nu^{-a-l}\rho]),\dots,\delta([\nu^{-a-k-1}\rho,\nu^{-a}\rho]),\delta([\nu^{-a-k}\rho,\nu^{x}\rho]);\sigma^{(m+1)})$$

is an irreducible subquotient of $\pi\rtimes\sigma^{(m-l-1)}$.

Using Frobenius reciprocity and a standard commuting argument, we obtain that the Jacquet module of the representation (4.2) with respect to the appropriate parabolic subgroup contains an irreducible representation of the form

$$\delta([\nu^{-a-k-l-1}\rho,\nu^{-a-l}\rho])\otimes\nu^{-a-l+1}\rho\otimes\nu^{-a-l+2}\rho\otimes\dots\otimes\nu^{-a}\rho\otimes$$
$$\delta([\nu^{-a+1}\rho,\nu^{x}\rho])\otimes\pi'.$$

Suppose that

$$\pi \cong L(\delta([\nu^a\rho, \nu^{a+k}\rho]), \dots, \delta([\nu^{a+l-1}\rho, \nu^{a+k+l-1}\rho]),$$
$$\delta([\nu^{a+l+1}\rho, \nu^{a+k+l}\rho]), \delta([\nu^{a+l}\rho, \nu^{a+k+l+1}\rho]))$$
$$\leq L(\delta([\nu^a\rho, \nu^{a+k}\rho]), \dots, \delta([\nu^{a+l-1}\rho, \nu^{a+k+l-1}\rho]))\times$$
$$\delta([\nu^{a+l+1}\rho, \nu^{a+k+l}\rho]) \times \delta([\nu^{a+l}\rho, \nu^{a+k+l+1}\rho]).$$

Using Theorem 2.2, the square-integrability of $\sigma^{(m-l-1)}$, and the fact that $\mu^*(\sigma^{(m-l-1)})$ does not contain an irreducible constituent of the form $\nu^y\rho\otimes\pi''$ for $y \in \{-a-l+1, -a-l+2, \dots, -a\}$, we conclude that

$$\mu^*(L(\delta([\nu^{a+1}\rho, \nu^{a+k}\rho]), \dots, \delta([\nu^{a+l}\rho, \nu^{a+k+l-1}\rho]))\times$$
$$\delta([\nu^{a+l+1}\rho, \nu^{a+k+l}\rho]) \rtimes \sigma^{(m-l-1)})$$

contains an irreducible representation of the form $\delta([\nu^{-a+1}\rho, \nu^x\rho])\otimes\pi'$, which is impossible since $-a-l-1 < -a+1$, $x < a+k$, and $\mu^*(\sigma^{(m-l-1)})$ does not contain an irreducible constituent of the form $\delta([\nu^{-a+1}\rho, \nu^x\rho])\otimes\pi''$.

Consequently, $\pi \cong L(\delta([\nu^a\rho, \nu^{a+k}\rho]), \dots, \delta([\nu^{a+l+1}\rho, \nu^{a+k+l+1}\rho]))$, and it follows that

$$L(\delta([\nu^{-a-k-m}\rho, \nu^{-a-m+1}\rho]), \dots, \delta([\nu^{-a-k-1}\rho, \nu^{-a}\rho]),$$
$$\delta([\nu^{-a-k}\rho, \nu^x\rho]); \sigma^{(m+1)})$$

is an irreducible subquotient of $L(\delta([\nu^a\rho, \nu^{a+k}\rho]), \dots, \delta([\nu^{a+m}\rho, \nu^{a+k+m}\rho]))\rtimes\sigma$. Now a repeated application of Lemma 3.3 can be used to prove our claim.

Let us comment on the case $2x+1 = -2a+1$. Again we define $\sigma^{(0)} = \sigma$ and, for $i = 1, 2, \dots, m$, let $\sigma^{(i)}$ denote a unique discrete series such that $\sigma^{(i-1)}$ is a subrepresentation of $\nu^{-a-m+i}\rho \rtimes \sigma^{(i)}$.

Let $\sigma^{(m+1)}$ denote a discrete series such that $\sigma^{(m)}$ is a subrepresentation of $\delta([\nu^{-a+1}\rho, \nu^{a+k}\rho]) \rtimes \sigma^{(m+1)}$, and let τ denote an irreducible tempered subrepresentation of $\delta([\nu^{-a-k}\rho, \nu^{a+k}\rho]) \rtimes \sigma^{(m+1)}$ such that $\mu^*(\tau)$ contains an irreducible constituent of the form $\delta([\nu^{-a+1}\rho, \nu^{a+k}\rho])\times\delta([\nu^{-a+1}\rho, \nu^{a+k}\rho])\otimes\pi$. By [22, Corollary 4.2], this is equivalent to the fact that τ embeds into an induced representation of the form $\delta([\nu^{-a+1}\rho, \nu^{a+k}\rho])\times\delta([\nu^{-a+1}\rho, \nu^{a+k}\rho])\rtimes\pi$.

We prove that

$$L(\delta([\nu^{-a-k-n+1}\rho, \nu^{-a-n+1}\rho]), \dots, \delta([\nu^{-a-k-m-1}\rho, \nu^{-a-m-1}\rho]),$$
$$\delta([\nu^{-a-k-m}\rho, \nu^{-a-m+1}\rho]), \dots, \delta([\nu^{-a-k-1}\rho, \nu^{-a}\rho]); \tau)$$

is an irreducible subquotient of

$$L(\delta([\nu^a\rho, \nu^{a+k}\rho]), \dots, \delta([\nu^{a+n-1}\rho, \nu^{a+k+n-1}\rho])) \rtimes \sigma.$$

By the second part of Lemma 3.5, τ is an irreducible subquotient of $\delta([\nu^a\rho, \nu^{a+k}\rho]) \rtimes \sigma^{(m)}$. Note that, for $i = 0, 1, 2, \dots, m-1$, $\mu^*(\sigma^{(i)})$ contains neither an irreducible constituent of the form $\delta([\nu^{-a+1}\rho, \nu^{a+k}\rho])\otimes\pi$ nor an irreducible

constituent of the form $\nu^y\rho\otimes\pi$, for $y\in\{-a-m+i+2,-a-m+i+3,\dots,-a\}$. Now the rest of the proof can be obtained following the same lines as in the proof of the previously considered case $2x+1>-2a+1$, using the fact that the Jacquet module of

$$L(\delta([\nu^{-a-k-l-1}\rho,\nu^{-a-l}\rho]),\dots,\delta([\nu^{-a-k-1}\rho,\nu^{-a}\rho]);\tau)$$

with respect to the appropriate parabolic subgroup contains an irreducible representation of the form

$$\delta([\nu^{-a-k-l-1}\rho,\nu^{-a-l}\rho])\otimes\nu^{-a-l+1}\rho\otimes\cdots\otimes\nu^{-a}\rho\otimes$$
$$\delta([\nu^{-a+1}\rho,\nu^{a+k}\rho])\times\delta([\nu^{-a+1}\rho,\nu^{a+k}\rho])\otimes\pi'.$$

□

PROPOSITION 4.4. *Suppose that* $2(a+k+m)+1\in\mathrm{Jord}_\rho(\sigma)$ *and* $\epsilon_\sigma((2(a+k+m)-1,\rho),(2(a+k+m)+1,\rho))=1$. *Then* $L(\delta([\nu^a\rho,\nu^{a+k}\rho]),\dots,\delta([\nu^{a+n-1}\rho,\nu^{a+k+n-1}\rho]))\rtimes\sigma$ *reduces.*

PROOF. We denote $(2(a+k)+1)_$ by $2x+1$ and consider two possibilities separately. First we consider that case $2x+1>-2a+1$.

Let $\sigma^{(1)}$ stand for a discrete series such that σ is a subrepresentation of $\delta([\nu^{-a-k-m+1}\rho,\nu^{a+k+m}\rho])\rtimes\sigma^{(1)}$.

If $m=1$, we denote by $\tau^{(1)}$ a unique irreducible tempered subrepresentation of $\delta([\nu^{-a-k-1}\rho,\nu^{a+k+1}\rho])\rtimes\sigma^{(1)}$ such that $\tau^{(1)}$ is not a subrepresentation of an induced representation of the form $\delta([\nu^{x+1}\rho,\nu^{a+k+1}\rho])\times\delta([\nu^{x+1}\rho,\nu^{a+k+1}\rho])\rtimes\pi$.

If $m\geq 2$, we denote by $\tau^{(1)}$ a unique irreducible tempered subrepresentation of $\delta([\nu^{-a-k-m}\rho,\nu^{a+k+m}\rho])\rtimes\sigma^{(1)}$ such that $\tau^{(1)}$ is not a subrepresentation of an induced representation of the form $\delta([\nu^{a+k+m-1}\rho,\nu^{a+k+m}\rho])\times\delta([\nu^{a+k+m-1}\rho,\nu^{a+k+m}\rho])\rtimes\pi$.

We note that uniqueness of $\tau^{(1)}$ can be obtained using [22, Section 4].

By [12, Theorem 5.4], the induced representation $\nu^{a+k+m}\rho\rtimes\sigma^{(1)}$ is irreducible, so we have

$$\begin{aligned}\tau^{(1)}&\hookrightarrow\delta([\nu^{-a-k-m}\rho,\nu^{a+k+m}\rho])\rtimes\sigma^{(1)}\\&\hookrightarrow\delta([\nu^{-a-k-m+1}\rho,\nu^{a+k+m}\rho])\times\nu^{-a-k-m}\rho\rtimes\sigma^{(1)}\\&\cong\delta([\nu^{-a-k-m+1}\rho,\nu^{a+k+m}\rho])\times\nu^{a+k+m}\rho\rtimes\sigma^{(1)}\\&\cong\nu^{a+k+m}\rho\times\delta([\nu^{-a-k-m+1}\rho,\nu^{a+k+m}\rho])\rtimes\sigma^{(1)},\end{aligned}$$

so there is an irreducible subquotient π of $\delta([\nu^{-a-k-m+1}\rho,\nu^{a+k+m}\rho])\rtimes\sigma^{(1)}$ such that $\tau^{(1)}$ is contained in $\nu^{a+k+m}\rho\rtimes\pi$. Since $\tau^{(1)}$ is also a subrepresentation of $\nu^{a+k+m}\rho\times\nu^{a+k+m}\rho\times\delta([\nu^{-a-k-m+1}\rho,\nu^{a+k+m-1}\rho])\rtimes\sigma^{(1)}$, it follows that $\mu^*(\pi)$ contains an irreducible constituent of the form $\nu^{a+k+m}\rho\otimes\pi'$.

Since $\delta([\nu^{-a-k-m+1}\rho, \nu^{a+k+m-1}\rho]) \rtimes \sigma^{(1)}$ is a length two representation, it easily follows that $\mu^*(\delta([\nu^{-a-k-m+1}\rho, \nu^{a+k+m}\rho]) \rtimes \sigma^{(1)})$ contains exactly two irreducible constituents of the form $\nu^{a+k+m}\rho \otimes \pi'$. By the classification of discrete series, $\delta([\nu^{-a-k-m+1}\rho, \nu^{a+k+m}\rho]) \rtimes \sigma^{(1)}$ has two irreducible subrepresentations, which are both in discrete series. Frobenius reciprocity implies that π is a discrete series subrepresentation of $\delta([\nu^{-a-k-m+1}\rho, \nu^{a+k+m}\rho]) \rtimes \sigma^{(1)}$.

Also, by the classification of discrete series, if σ' is a discrete series subrepresentation of $\delta([\nu^{-a-k-m+1}\rho, \nu^{a+k+m}\rho]) \rtimes \sigma^{(1)}$ such that $\epsilon_{\sigma'}(((2(a+k+m)-1)_-, \rho), (2(a+k+m)-1, \rho)) = -1$, we have $\sigma' \cong \sigma$.

Using a definition of $\tau^{(1)}$, following the same lines as in the proof of [13, Lemma 3.5], we conclude that $\epsilon_\pi(((2(a+k+m)-1)_-, \rho), (2(a+k+m)-1, \rho)) = -1$. Consequently, $\pi \cong \sigma$, i.e., $\tau^{(1)}$ is an irreducible subquotient of $\nu^{a+k+m}\rho \rtimes \sigma$.

For $m \geq 2$ and $i = 2, 3, \dots, m$, we let $\sigma^{(i)}$ denote a unique discrete series subrepresentation of $\nu^{a+k+m-i+1}\rho \rtimes \sigma^{(i-1)}$ and let $\tau^{(i)}$ denote an irreducible tempered subrepresentation of $\delta([\nu^{-a-k-m}\rho, \nu^{a+k+m}\rho]) \rtimes \sigma^{(i)}$ such that $\tau^{(i)}$ is not a subrepresentation of an induced representation of the form $\nu^{a+k+m}\rho \times \nu^{a+k+m}\rho \rtimes \pi$.

Let $\sigma^{(m+1)}$ stand for a unique discrete series subrepresentation of $\delta([\nu^{x+1}\rho, \nu^{a+k}\rho]) \rtimes \sigma^{(m)}$, and let $\tau^{(m+1)}$ denote an irreducible tempered subrepresentation of $\delta([\nu^{-a-k-m}\rho, \nu^{a+k+m}\rho]) \rtimes \sigma^{(m+1)}$ such that $\tau^{(m+1)}$ is not a subrepresentation of an induced representation of the form $\nu^{a+k+m}\rho \times \nu^{a+k+m}\rho \rtimes \pi$.

It can be seen in the same way as in the proof of Proposition 4.2 that, for $j = 1, 2, \dots, m$, $\mu^*(\tau^{(j)})$ contains neither an irreducible constituent of the form $\delta([\nu^{x+1}\rho, \nu^{a+k}\rho]) \otimes \pi$ nor an irreducible constituent of the form $\nu^y\rho \otimes \pi$, for $y \in \{a+k+1, a+k+2, \dots, a+k+m-j\}$.

We prove that

$$L(\delta([\nu^{-a-k-n+1}\rho, \nu^{-a-n+1}\rho]), \dots, \delta([\nu^{-a-k-m-1}\rho, \nu^{-a-m-1}\rho]),$$
$$\delta([\nu^{-a-k-m+1}\rho, \nu^{-a-m}\rho]), \dots, \delta([\nu^{-a-k}\rho, \nu^{-a-1}\rho]), \delta([\nu^{-x}\rho, \nu^{-a}\rho]); \tau^{(m+1)})$$

is an irreducible subquotient of

$$L(\delta([\nu^{a}\rho, \nu^{a+k}\rho]), \dots, \delta([\nu^{a+n-1}\rho, \nu^{a+k+n-1}\rho])) \rtimes \sigma.$$

First, by Lemma 3.6 we have $L(\delta([\nu^{-x}\rho, \nu^{-a}\rho]); \tau^{(m+1)}) \leq \delta([\nu^{a}\rho, \nu^{a+k}\rho]) \rtimes \tau^{(m)}$.

Note that $\tau^{(m+1)}$ is a subrepresentation of an induced representation of the form

$$\delta([\nu^{x+1}\rho, \nu^{a+k}\rho]) \times \nu^{a+k+1}\rho \times \nu^{a+k+2}\rho \times \cdots \times \nu^{a+k+m-1}\rho \rtimes \pi.$$

Following the same lines as in the proof of Proposition 4.2, just using Lemma 3.6 instead of Lemma 3.4, we deduce that for $l = 0, 1, \dots, m-1$ we have

$$L(\delta([\nu^{-a-k-l+1}\rho, \nu^{-a-l}\rho]), \dots, \delta([\nu^{-a-k}\rho, \nu^{-a-1}\rho]), \delta([\nu^{-x}\rho, \nu^{-a}\rho]); \tau^{(m+1)}) \\ \leq L(\delta([\nu^{a}\rho, \nu^{a+k}\rho]), \dots, \delta([\nu^{a+l}\rho, \nu^{a+k+l}\rho])) \rtimes \tau^{(m-l)}.$$

In particular, for $l = m-1$ we get

$$L(\delta([\nu^{-a-k-m+2}\rho, \nu^{-a-m+1}\rho]), \dots, \delta([\nu^{-a-k}\rho, \nu^{-a-1}\rho]), \delta([\nu^{-x}\rho, \nu^{-a}\rho]); \tau^{(m+1)}) \\ \leq L(\delta([\nu^{a}\rho, \nu^{a+k}\rho]), \dots, \delta([\nu^{a+m-1}\rho, \nu^{a+k+m-1}\rho])) \rtimes \tau^{(1)} \\ \leq L(\delta([\nu^{a}\rho, \nu^{a+k}\rho]), \dots, \delta([\nu^{a+m-1}\rho, \nu^{a+k+m-1}\rho])) \times \nu^{a+k+m}\rho \rtimes \sigma,$$

so there is an irreducible subquotient π of

$$L(\delta([\nu^{a}\rho, \nu^{a+k}\rho]), \dots, \delta([\nu^{a+m-1}\rho, \nu^{a+k+m-1}\rho])) \times \nu^{a+k+m}\rho$$

such that

(4.3)
$$L(\delta([\nu^{-a-k-m+2}\rho, \nu^{-a-m+1}\rho]), \dots, \delta([\nu^{-a-k}\rho, \nu^{-a-1}\rho]), \delta([\nu^{-x}\rho, \nu^{-a}\rho]); \tau^{(m+1)})$$

is an irreducible subquotient of $\pi \rtimes \sigma$. Obviously, either

$$\pi \cong L(\delta([\nu^{a}\rho, \nu^{a+k}\rho]), \dots, \delta([\nu^{a+m-1}\rho, \nu^{a+k+m-1}\rho]), \nu^{a+k+m}\rho)$$

or

$$\pi \cong L(\delta([\nu^{a}\rho, \nu^{a+k}\rho]), \dots, \delta([\nu^{a+m-2}\rho, \nu^{a+k+m-2}\rho]), \delta([\nu^{a+m-1}\rho, \nu^{a+k+m}\rho])).$$

Since $\mu^*(\sigma)$ contains neither an irreducible constituent of the form $\delta([\nu^{x+1}\rho, \nu^{a+k}\rho]) \otimes \pi'$ nor an irreducible constituent of the form $\nu^{y}\rho \otimes \pi'$, for $y \in \{a+k+1, a+k+2, \dots, a+k+m-1\}$, a repeated application of Theorem 2.2 can be used to see that the Jacquet module of

$$L(\delta([\nu^{a}\rho, \nu^{a+k}\rho]), \dots, \delta([\nu^{a+m-2}\rho, \nu^{a+k+m-2}\rho]), \delta([\nu^{a+m-1}\rho, \nu^{a+k+m}\rho])) \rtimes \sigma$$

with respect to the appropriate parabolic subgroup does not contain an irreducible representation of the form

$$\delta([\nu^{x+1}\rho, \nu^{a+k}\rho]) \otimes \nu^{a+k+1}\rho \otimes \nu^{a+k+2}\rho \otimes \dots \otimes \nu^{a+k+m-1}\rho \otimes \pi'.$$

Consequently, $\pi \cong L(\delta([\nu^{a}\rho, \nu^{a+k}\rho]), \dots, \delta([\nu^{a+m-1}\rho, \nu^{a+k+m-1}\rho]), \nu^{a+k+m}\rho)$.

This leads to

$$L(\delta([\nu^{-a-k-m+1}\rho, \nu^{-a-m}\rho]), \dots, \delta([\nu^{-a-k}\rho, \nu^{-a-1}\rho]), \delta([\nu^{-x}\rho, \nu^{-a}\rho]); \tau^{(m+1)}) \\ \leq L(\delta([\nu^{a}\rho, \nu^{a+k}\rho]), \dots, \delta([\nu^{a+m-1}\rho, \nu^{a+k+m-1}\rho]), \nu^{a+k+m}\rho) \times \\ \delta([\nu^{a+m}\rho, \nu^{a+k+m-1}\rho]) \rtimes \sigma,$$

and there is an irreducible subquotient π' of

$$L(\delta([\nu^{a}\rho, \nu^{a+k}\rho]), \dots, \delta([\nu^{a+m-1}\rho, \nu^{a+k+m-1}\rho]), \nu^{a+k+m}\rho) \times \\ \delta([\nu^{a+m}\rho, \nu^{a+k+m-1}\rho])$$

such that

(4.4)
$$L(\delta([\nu^{-a-k-m+1}\rho,\nu^{-a-m}\rho]),\dots,\delta([\nu^{-a-k}\rho,\nu^{-a-1}\rho]),\delta([\nu^{-x}\rho,\nu^{-a}\rho];\tau^{(m+1)})$$

is contained in $\pi'\rtimes\sigma$. Since the Jacquet module of the representation (4.4) with respect to the appropriate parabolic subgroup contains an irreducible constituent of the form $\delta([\nu^{-a-k-m+1}\rho,\nu^{-a-m}\rho])\otimes\pi''$, and π' is contained in

$$L(\delta([\nu^{a}\rho,\nu^{a+k}\rho]),\dots,\delta([\nu^{a+m-1}\rho,\nu^{a+k+m-1}\rho]),\nu^{a+k+m}\rho)\times$$
$$\delta([\nu^{a+m}\rho,\nu^{a+k+m-1}\rho])\le L(\delta([\nu^{a}\rho,\nu^{a+k}\rho]),\dots,\delta([\nu^{a+m-1}\rho,\nu^{a+k+m-1}\rho]))\times$$
$$\nu^{a+k+m}\rho\times\delta([\nu^{a+m}\rho,\nu^{a+k+m-1}\rho])=$$
$$L(\delta([\nu^{a}\rho,\nu^{a+k}\rho]),\dots,\delta([\nu^{a+m-1}\rho,\nu^{a+k+m-1}\rho]))\times\delta([\nu^{a+m}\rho,\nu^{a+k+m}\rho])+$$
$$L(\delta([\nu^{a}\rho,\nu^{a+k}\rho]),\dots,\delta([\nu^{a+m-1}\rho,\nu^{a+k+m-1}\rho]))\times$$
$$L(\delta([\nu^{a+m}\rho,\nu^{a+k+m-1}\rho]),\nu^{a+k+m}\rho),$$

using Theorem 2.2 we obtain

$$\pi'\le L(\delta([\nu^{a}\rho,\nu^{a+k}\rho]),\dots,\delta([\nu^{a+m-1}\rho,\nu^{a+k+m-1}\rho]))\times\delta([\nu^{a+m}\rho,\nu^{a+k+m}\rho]).$$

Using the same reasoning as before, we conclude

$$\pi'\cong L(\delta([\nu^{a}\rho,\nu^{a+k}\rho]),\dots,\delta([\nu^{a+m-1}\rho,\nu^{a+k+m-1}\rho]),\delta([\nu^{a+m}\rho,\nu^{a+k+m}\rho])).$$

Now the rest of the proof in the case $2x+1>-2a+1$ follows by a repeated application of Lemma 3.3.

Let us shortly comment on the case $2x+1=-2a+1$. We define $\sigma^{(1)},\sigma^{(2)},\dots,\sigma^{(m+1)}$ and $\tau^{(1)},\tau^{(2)},\dots,\tau^{(m)}$ in the same way as in the previously considered case $2x+1>-2a+1$.

We denote by $\tau^{(m+1)}$ an irreducible tempered subrepresentation of

$$\delta([\nu^{-a-k-m}\rho,\nu^{a+k+m}\rho])\times\delta([\nu^{a}\rho,\nu^{-a}\rho])\rtimes\sigma^{(m+1)}$$

which is a subrepresentation of an induced representation of the form $\delta([\nu^{-a+1}\rho,\ \nu^{a+k}\rho])\rtimes\pi$ and is not a subrepresentation of an induced representation of the form $\nu^{a+k+m}\rho\times\nu^{a+k+m}\rho\rtimes\pi$.

By Lemma 3.7, $\tau^{(m+1)}$ is an irreducible subquotient of $\delta([\nu^{a}\rho,\nu^{a+k}\rho])\rtimes\tau^{(m)}$. It can now be proved in the same way as in the previously considered case $2x+1>-2a+1$ that

$$L(\delta([\nu^{-a-k-n+1}\rho,\nu^{-a-n+1}\rho]),\dots,\delta([\nu^{-a-k-m-1}\rho,\nu^{-a-m-1}\rho]),$$
$$\delta([\nu^{-a-k-m+1}\rho,\nu^{-a-m}\rho]),\dots,\delta([\nu^{-a-k}\rho,\nu^{-a-1}\rho]);\tau^{(m+1)})$$

is an irreducible subquotient of

$$L(\delta([\nu^{a}\rho,\nu^{a+k}\rho]),\dots,\delta([\nu^{a+n-1}\rho,\nu^{a+k+n-1}\rho]))\rtimes\sigma.$$

This ends the proof. □

PROPOSITION 4.5. *Suppose that* $a+m\leq 0$, $-2(a+m)+1\in \mathrm{Jord}_\rho(\sigma)$, *and* $\epsilon_\sigma((-2(a+m)+1,\rho),(-2(a+m)+3,\rho))=1$. *Then* $L(\delta([\nu^a\rho,\nu^{a+k}\rho]),\dots,\delta([\nu^{a+n-1}\rho,\nu^{a+k+n-1}\rho]))\rtimes\sigma$ *reduces.*

PROOF. Let us denote by $2x+1$ an element of $\mathrm{Jord}_\rho(\sigma)$ such that $(2x+1)_-=-2a+1$. Then $2x+1\leq 2(a+k)+1$. First we discuss the case $2x+1<2(a+k)+1$.

From $\epsilon_\sigma(-2(a+m)+1,-2(a+m)+3)=1$, by the classification of discrete series follows that there is an irreducible tempered representation $\tau^{(1)}$ such that σ is a subrepresentation of $\nu^{-a-m+1}\rho\rtimes\tau^{(1)}$. Then $\tau^{(1)}$ is a subrepresentation of $\delta([\nu^{a+m}\rho,\nu^{-a-m}\rho])\rtimes\sigma^{(1)}$, for a discrete series $\sigma^{(1)}$ such that σ is a subrepresentation of $\delta([\nu^{a+m}\rho,\nu^{-a-m+1}\rho])\rtimes\sigma^{(1)}$. Since $-2(a+m)+3\notin\mathrm{Jord}_\rho(\sigma^{(1)})$, it follows that $\nu^{-a-m+1}\rho\otimes\tau^{(1)}$ is a unique irreducible constituent of $\mu^*(\nu^{-a-m+1}\rho\rtimes\tau^{(1)})$ of the form $\nu^{-a-m+1}\rho\otimes\pi$. Thus, σ is a unique irreducible subquotient of $\nu^{-a-m+1}\rho\rtimes\tau^{(1)}$ which contains an irreducible constituent of the form $\nu^{-a-m+1}\rho\otimes\pi$ in the Jacquet module with respect to the appropriate parabolic subgroup.

Let $2y+1$ denote an element of $\mathrm{Jord}_\rho(\sigma)$ such that $(2y+1)_-=-2(a+m)+3$. Note that $y=x$ if $m=1$, and $y=-a-m+2$ otherwise. Then $\tau^{(1)}$ is an irreducible tempered subrepresentation of $\delta([\nu^{a+m}\rho,\nu^{-a-m}\rho])\rtimes\sigma^{(1)}$ which is not a subrepresentation of an induced representation of the form $\delta([\nu^{-a-m+1}\rho,\nu^y\rho])\rtimes\pi$, since otherwise we would have

$$\begin{aligned}\sigma&\hookrightarrow\nu^{-a-m+1}\rho\times\delta([\nu^{-a-m+1}\rho,\nu^y\rho])\rtimes\pi\\&\cong\delta([\nu^{-a-m+1}\rho,\nu^y\rho])\times\nu^{-a-m+1}\rho\rtimes\pi,\end{aligned}$$

leading to $\epsilon_\sigma((-2(a+m)+3,\rho),(2y+1,\rho))=1$, a contradiction.

For $i=2,3,\dots,m$, we define $\sigma^{(i)}$ as a unique discrete series such that $\sigma^{(i-1)}$ is a subrepresentation of $\nu^{-a-m+i}\rho\rtimes\sigma^{(i)}$. Also, let $\sigma^{(m+1)}$ denote a discrete series such that $\sigma^{(m)}$ is a subrepresentation of $\delta([\nu^{-a+1}\rho,\nu^x\rho])\rtimes\sigma^{(m+1)}$.

Note that for $i=2,3,\dots,m+1$ we have $-2(a+m)+3\in\mathrm{Jord}_\rho(\sigma^{(i)})$, and let $\tau^{(i)}$, for $i=2,3,\dots,m+1$, denote an irreducible tempered subrepresentation of $\delta([\nu^{a+m}\rho,\nu^{-a-m}\rho])\rtimes\sigma^{(i)}$ which is not a subrepresentation of an induced representation of the form $\nu^{-a-m+1}\rho\rtimes\pi$.

It can be observed directly from the definitions of σ and $\sigma^{(i)}$ that, for $i=1,2,\dots,m-1$, $\mu^*(\sigma^{(i)})$ contains neither an irreducible constituent of the form $\delta([\nu^{-a+1}\rho,\nu^x\rho])\otimes\pi$ nor an irreducible constituent of the form $\nu^y\rho\otimes\pi$, for $y\in\{-a-m+i+2,-a-m+i+3,\dots,-a\}$.

We prove that

$$\begin{aligned}&L(\delta([\nu^{-a-k-n+1}\rho,\nu^{-a-n+1}\rho]),\dots,\delta([\nu^{-a-k-m-1}\rho,\nu^{-a-m-1}\rho]),\\&\delta([\nu^{-a-k-m}\rho,\nu^{-a-m+1}\rho]),\dots,\delta([\nu^{-a-k-1}\rho,\nu^{-a}\rho]),\delta([\nu^{-a-k}\rho,\nu^x\rho]);\tau^{(m+1)})\end{aligned}$$

is an irreducible subquotient of

$$L(\delta([\nu^a\rho,\nu^{a+k}\rho]),\dots,\delta([\nu^{a+n-1}\rho,\nu^{a+k+n-1}\rho]))\rtimes\sigma.$$

First, by Lemma 3.8 we have

$$L(\delta([\nu^{-a-k}\rho,\nu^x\rho]);\tau^{(m+1)})\le\delta([\nu^a\rho,\nu^{a+k}\rho])\rtimes\tau^{(m)}.$$

Following the same lines as in the proof of Proposition 4.3, just using Lemma 3.8 instead of Lemma 3.5, we deduce that for $l=1,2,\dots,m-1$ we have

$$L(\delta([\nu^{-a-k-l}\rho,\nu^{-a-l+1}\rho]),\dots,\delta([\nu^{-a-k-1}\rho,\nu^{-a}\rho]),\delta([\nu^{-a-k}\rho,\nu^x\rho]);\tau^{(m+1)})$$
$$\le L(\delta([\nu^a\rho,\nu^{a+k}\rho]),\dots,\delta([\nu^{a+l}\rho,\nu^{a+k+l}\rho]))\rtimes\tau^{(m-l)}.$$

In particular, for $l=m-1\ge 1$ we have

$$L(\delta([\nu^{-a-k-m+1}\rho,\nu^{-a-m+2}\rho]),\dots,\delta([\nu^{-a-k-1}\rho,\nu^{-a}\rho]),$$
$$\delta([\nu^{-a-k}\rho,\nu^x\rho]);\tau^{(m+1)})\le$$
$$L(\delta([\nu^a\rho,\nu^{a+k}\rho]),\dots,\delta([\nu^{a+m-1}\rho,\nu^{a+k+m-1}\rho]))\rtimes\tau^{(1)}.$$

Consequently, using Lemma 3.2 we deduce

$$L(\delta([\nu^{-a-k-m}\rho,\nu^{-a-m+1}\rho]),\dots,\delta([\nu^{-a-k-1}\rho,\nu^{-a}\rho]),$$
$$\delta([\nu^{-a-k}\rho,\nu^x\rho]);\tau^{(m+1)})\le$$
$$L(\delta([\nu^a\rho,\nu^{a+k}\rho]),\dots,\delta([\nu^{a+m-1}\rho,\nu^{a+k+m-1}\rho]))$$
$$\rtimes L(\delta([\nu^{-a-k-m}\rho,\nu^{-a-m+1}\rho]);\tau^{(1)}).$$

Note that $L(\delta([\nu^{-a-k-m}\rho,\nu^{-a-m+1}\rho]);\tau^{(1)})$ is an irreducible subquotient of

$$\delta([\nu^{a+m}\rho,\nu^{a+k+m}\rho])\times\nu^{-a-m+1}\rho\rtimes\tau^{(1)}.$$

Thus, there is an irreducible subquotient π_1 of $\nu^{-a-m+1}\rho\rtimes\tau^{(1)}$ such that $L(\delta([\nu^{-a-k-m}\rho,\nu^{-a-m+1}\rho]);\tau^{(1)})$ is an irreducible subquotient of $\delta([\nu^{a+m}\rho,\nu^{a+k+m}\rho])\rtimes\pi_1$.

Since $\mu^*(L(\delta([\nu^{-a-k-m}\rho,\nu^{-a-m+1}\rho]);\tau^{(1)}))$ contains an irreducible constituent of the form $\nu^{-a-m+1}\rho\otimes\pi$, it follows that $\mu^*(\pi_1)$ also contains an irreducible constituent of such a form. Thus, $\pi_1\cong\sigma$ and

$$L(\delta([\nu^{-a-k-m}\rho,\nu^{-a-m+1}\rho]),\dots,\delta([\nu^{-a-k-1}\rho,\nu^{-a}\rho]),$$
$$\delta([\nu^{-a-k}\rho,\nu^x\rho]);\tau^{(m+1)})\le$$
$$L(\delta([\nu^a\rho,\nu^{a+k}\rho]),\dots,\delta([\nu^{a+m-1}\rho,\nu^{a+k+m-1}\rho]))\times\delta([\nu^{a+m}\rho,\nu^{a+k+m}\rho])\rtimes\sigma.$$

Since $\mu^*(\sigma)$ contains neither an irreducible constituent of the form $\delta([\nu^{-a+1}\rho,\nu^x\rho])\otimes\pi$ nor an irreducible constituent of the form $\nu^y\rho\otimes\pi$, for $-a-m+2\le y\le -a$, and the Jacquet module of

$$L(\delta([\nu^{-a-k-m}\rho,\nu^{-a-m+1}\rho]),\dots,\delta([\nu^{-a-k-1}\rho,\nu^{-a}\rho]),\delta([\nu^{-a-k}\rho,\nu^x\rho]);\tau^{(m+1)})$$

with respect to the appropriate parabolic subgroup contains an irreducible representation of the form

$$\delta([\nu^{-a-k-m}\rho,\nu^{-a-m+1}\rho])\otimes\nu^{-a-m+2}\rho\otimes\cdots\otimes\nu^{-a}\rho\otimes\delta([\nu^{-a+1}\rho,\nu^{x}\rho])\otimes\pi,$$

it can be concluded in the same way as in the proof of Proposition 4.3 that

$$\begin{aligned}L(\delta([\nu^{-a-k-m}\rho,\nu^{-a-m+1}\rho]),\dots,\delta([\nu^{-a-k-1}\rho,\nu^{-a}\rho]),\delta([\nu^{-a-k}\rho,\nu^{x}\rho]);\tau^{(m+1)})\\ \leq L(\delta([\nu^{a}\rho,\nu^{a+k}\rho]),\dots,\delta([\nu^{a+m}\rho,\nu^{a+k+m}\rho]))\rtimes\sigma.\end{aligned}$$

The rest of the proof in the case $2x+1<2(a+k)+1$ follows by a repeated application of Lemma 3.3.

Let us comment on the case $2x+1=2(a+k)+1$. We define discrete series representations $\sigma^{(1)},\dots,\sigma^{(m)}$ and irreducible tempered representations $\tau^{(1)},\dots,\tau^{(m)}$ in the same way as in the case $2x+1<2(a+k)+1$.

Let $\sigma^{(m+1)}$ denote a discrete series such that $\sigma^{(m)}$ is a subrepresentation of $\delta([\nu^{-a+1}\rho,\nu^{a+k}\rho])\rtimes\sigma^{(m+1)}$, and let $\tau^{(m+1)}$ stand for an irreducible tempered subrepresentation of

$$\delta([\nu^{a+m}\rho,\nu^{-a-m}\rho])\times\delta([\nu^{-a-k}\rho,\nu^{a+k}\rho])\rtimes\sigma^{(m+1)}$$

which is a subrepresentation of an induced representation of the form

$$\delta([\nu^{-a+1}\rho,\nu^{a+k}\rho])\times\delta([\nu^{-a+1}\rho,\nu^{a+k}\rho])\rtimes\pi$$

and is not a subrepresentation of an induced representation of the form $\nu^{-a-m+1}\rho\rtimes\pi$.

By Lemma 3.9, $\tau^{(m+1)}$ is an irreducible subquotient of $\delta([\nu^{a}\rho,\nu^{a+k}\rho])\rtimes\tau^{(m)}$. It can now be proved following the same lines as in the case $2x+1<2(a+k)+1$ that

$$\begin{aligned}L(\delta([\nu^{-a-k-n+1}\rho,\nu^{-a-n+1}\rho]),\dots,\delta([\nu^{-a-k-m-1}\rho,\nu^{-a-m-1}\rho]),\\ \delta([\nu^{-a-k-m}\rho,\nu^{-a-m+1}\rho]),\dots,\delta([\nu^{-a-k-1}\rho,\nu^{-a}\rho]);\tau^{(m+1)})\end{aligned}$$

is an irreducible subquotient of

$$L(\delta([\nu^{a}\rho,\nu^{a+k}\rho]),\dots,\delta([\nu^{a+n-1}\rho,\nu^{a+k+n-1}\rho]))\rtimes\sigma.$$

This ends the proof. □

From Propositions 4.1 - 4.5 we deduce the main result of this section.

THEOREM 4.6. *If there is an $i\in\{0,1,\dots,n-1\}$ such that the induced representation $\delta([\nu^{a+i}\rho,\nu^{a+k+i}\rho])\rtimes\sigma$ reduces, then the induced representation $L(\delta([\nu^{a}\rho,\nu^{a+k}\rho]),\delta([\nu^{a+1}\rho,\nu^{a+k+1}\rho]),\dots,\delta([\nu^{a+n-1}\rho,\nu^{a+k+n-1}\rho]))\rtimes\sigma$ reduces.*

5. Irreducibility

We fix an irreducible cuspidal representation $\rho \in R(GL)$, a negative real number a, and positive integers k and n such that $a+k > -a$.

The aim of this section is to prove that

$$L(\delta([\nu^a\rho, \nu^{a+k}\rho]), \dots, \delta([\nu^{a+n-1}\rho, \nu^{a+k+n-1}\rho])) \rtimes \sigma$$

is irreducible if $\delta([\nu^{a+i}\rho, \nu^{a+k+i}\rho]) \rtimes \sigma$ is irreducible for all $i \in \{0, 1, \dots, n-1\}$.

We start with the following lemma:

Lemma 5.1. *Suppose that $\tau \in R(G)$ is an irreducible tempered representation and let δ_i stand for $\delta([\nu^{x_i}\rho_i, \nu^{y_i}\rho_i])$, where $\rho_i \in R(GL)$ is an irreducible cuspidal representation and $x_i + y_i < 0$, for $i = 1, 2, \dots, m$. If $\delta_1 \times \dots \times \delta_m \rtimes \tau$ has an irreducible subrepresentation π, which is also an irreducible subquotient of $L(\delta([\nu^a\rho, \nu^{a+k}\rho]), \dots, \delta([\nu^{a+n-1}\rho, \nu^{a+k+n-1}\rho])) \rtimes \sigma$, then for $i = 1, 2, \dots, m$ we have $\rho_i \cong \widetilde{\rho}$ if $F' = F$, and $\rho_i \cong \widehat{\rho}$ otherwise.*

Proof. We comment only the case $F' = F$, since the other case can be treated in a completely analogous manner. Suppose that there is an $i \in \{1, 2, \dots, m\}$ such that $\rho_i \not\cong \widetilde{\rho}$, and let us denote the minimal such i by $i_{\min}$. Then for $j \in \{1, \dots, i_{\min} - 1\}$ we have $\delta_j \times \delta_{i_{\min}} \cong \delta_{i_{\min}} \times \delta_j$, and using a commuting argument, together with the Frobenius reciprocity, we get that $\mu^*(L(\delta([\nu^a\rho, \nu^{a+k}\rho]), \dots, \delta([\nu^{a+n-1}\rho, \nu^{a+k+n-1}\rho])) \rtimes \sigma)$ contains an irreducible constituent of the form $\delta([\nu^{x_{i_{\min}}}\rho_{i_{\min}}, \nu^{y_{i_{\min}}}\rho_{i_{\min}}]) \otimes \pi'$. Since $x_{i_{\min}} + y_{i_{\min}} < 0$, using the square-integrability of σ and Theorem 2.2, we obtain $\rho_{i_{\min}} \cong \widetilde{\rho}$, a contradiction. □

The following lemma is a direct consequence of the square-integrability criterion, [12, Theorems 3.5, 4.6, 5.4] and [22, Proposition 7.2]:

Lemma 5.2. *Suppose that ρ is F'/F-selfdual and that $\delta([\nu^{a+i}\rho, \nu^{a+k+i}\rho]) \rtimes \sigma$ is irreducible for all $i \in \{0, 1, \dots, n-1\}$. If $\mu^*(\sigma)$ contains an irreducible constituent of the form $\delta([\nu^c\rho, \nu^d\rho]) \otimes \pi$, then $c + d > 0$, $2d + 1 \in \mathrm{Jord}_\rho(\sigma)$, and one of the following holds:*

(1) $d > a + k + n - 1$,
(2) $d \leq -a - n + 1$,
(3) $-a + 2 \leq d \leq a + k$, $c \geq \frac{(2d+1)_+3}{2}$.

First we consider the more complicated case and, until said otherwise, we assume that ρ is F'/F-selfdual and $a - \alpha \in \mathbb{Z}$ for a unique non-negative α such that $\nu^\alpha\rho \rtimes \sigma_{cusp}$ reduces.

Proposition 5.3. *Suppose that $\delta([\nu^{a+i}\rho, \nu^{a+k+i}\rho]) \rtimes \sigma$ is irreducible for all $i \in \{0, 1, \dots, n-1\}$. If $\delta([\nu^x\rho, \nu^y\rho]) \otimes \pi$ is an irreducible constituent of $\mu^*(L(\delta([\nu^a\rho, \nu^{a+k}\rho]), \dots, \delta([\nu^{a+n-1}\rho, \nu^{a+k+n-1}\rho])) \rtimes \sigma)$, where $x + y < 0$, then one of the following holds:*

(1) $y = -a-n+1$, $-x \le a+k+n-1$,

$$\pi \le L(\delta([\nu^a\rho, \nu^{a+k}\rho]), \dots, \delta([\nu^{a+n-2}\rho, \nu^{a+k+n-2}\rho]), \delta([\nu^{-x+1}\rho, \nu^{a+k+n-1}\rho])) \rtimes \sigma$$

(2) $y = a+k$, $a+n-1 \le -x \le a+k+n-1$,

$$\pi \le L(\delta([\nu^a\rho, \nu^{-a-n+1}\rho]), \delta([\nu^{a+1}\rho, \nu^{a+k+1}\rho]), \dots, \delta([\nu^{a+n-2}\rho, \nu^{a+k+n-2}\rho]), \delta([\nu^{-x+1}\rho, \nu^{a+k+n-1}\rho])) \rtimes \sigma$$

Proof. Since the Jacquet module of $\delta([\nu^x\rho, \nu^y\rho])$ with respect to the appropriate parabolic subgroup contains $\nu^y\rho \otimes \nu^{y-1}\rho \otimes \cdots \otimes \nu^x\rho$, it follows directly from Theorem 2.2 that there are c and d such that $a+n-2 \le c \le a+k+n-1$, $a-1 \le d \le a+k$, and an irreducible constituent $\delta' \otimes \sigma'$ of $\mu^*(\sigma)$ such that

$$\delta([\nu^x\rho, \nu^y\rho]) \le \delta([\nu^{-c}\rho, \nu^{-a-n+1}\rho]) \times \delta([\nu^{d+1}\rho, \nu^{a+k}\rho]) \times \delta'$$

and

$$\pi \le L(\delta([\nu^a\rho, \nu^d\rho]), \delta([\nu^{a+1}\rho, \nu^{a+k+1}\rho]), \dots, \delta([\nu^{a+n-2}\rho, \nu^{a+k+n-2}\rho]), \delta([\nu^{c+1}\rho, \nu^{a+k+n-1}\rho])) \rtimes \sigma'.$$

Since, by the square-integrability criterion, there is no constituent of $\mu^*(\sigma)$ of the form $\nu^t\rho \otimes \pi'$ for $t \le 0$, we obtain $c > a+n-2$, so $x = -c \ge -a-k-n+1$ and $y \ge -a-n+1$.

If $y > a+k$, it follows that $\mu^*(\sigma)$ contains an irreducible constituent of the form $\delta([\nu^{x'}\rho, \nu^y\rho]) \otimes \pi'$. From Lemma 5.2 follows $y > a+k+n-1$, which is impossible since $x+y < 0$.

If $-a-n+1 < y < a+k$, we have $d = a+k$, so $\mu^*(\sigma)$ contains an irreducible constituent of the form $\delta([\nu^{-a-n+2}\rho, \nu^y\rho]) \otimes \pi'$, contradicting the third part of Lemma 5.2. Thus, $y \in \{-a-n+1, a+k\}$.

If $y = -a-n+1$, we have $d = a+k$ and $\sigma' \cong \sigma$. If $y = a+k$, then $d < a+k$ and, using the third part of Lemma 5.2 again, we deduce $d = -a-n+2$ and $\sigma' \cong \sigma$. This ends the proof. ∎

Proposition 5.4. *Suppose that* $\delta([\nu^{a+i}\rho, \nu^{a+k+i}\rho]) \rtimes \sigma$ *is irreducible for all* $i \in \{0, 1, \dots, n-1\}$. *Suppose that* $\delta([\nu^x\rho, \nu^y\rho]) \otimes \pi$, $x+y < 0$, *is an irreducible constituent of*

$$\mu^*(L(\delta([\nu^a\rho, \nu^{a+k}\rho]), \dots, \delta([\nu^{a+n-t-1}\rho, \nu^{a+k+n-t-1}\rho]), \delta([\nu^{-x_t+1}\rho, \nu^{a+k+n-t}\rho]), \dots, \delta([\nu^{-x_1+1}\rho, \nu^{a+k+n-1}\rho])) \rtimes \sigma),$$

where $1 \le t < n$, $y \ge -a-n+t$, $-a-k-n+i \le x_i < a+n-i$ *for* $i = 1, 2, \dots, t$, *and* $x_i < x_{i+1}$ *for* $i = 1, 2, \dots, t-1$. *Then one of the following holds:*

(1) $y = -a-n+t+1$, $x_t < a+n-t-2$, $x_t < x$,

$$\pi \leq L(\delta([\nu^a\rho, \nu^{a+k}\rho]), \dots, \delta([\nu^{a+n-t-2}\rho, \nu^{a+k+n-t-2}\rho]),$$
$$\delta([\nu^{-x+1}\rho, \nu^{a+k+n-t-1}\rho]), \delta([\nu^{-x_t+1}\rho, \nu^{a+k+n-t}\rho]), \dots,$$
$$\delta([\nu^{-x_1+1}\rho, \nu^{a+k+n-1}\rho])) \rtimes \sigma,$$

(2) $y = a+k$, *there is an* $i \in \{1, 2, \dots, t\}$ *such that* $a-1 \leq x_i - 1 < a+k$, $x_{i-1} < -a-k-1$ *if* $i \geq 2$, $x_{i-1} < x$,

$$\pi \leq L(\delta([\nu^a\rho, \nu^{x_i-1}\rho]), \delta([\nu^{a+1}\rho, \nu^{a+k+1}\rho]), \dots, \delta([\nu^{a+n-t-1}\rho, \nu^{a+k+n-t-1}\rho]),$$
$$\delta([\nu^{-x_t+1}\rho, \nu^{a+k+n-t}\rho]), \dots, \delta([\nu^{-x_{i+1}+1}\rho, \nu^{a+k+n-i-1}\rho]),$$
$$\delta([\nu^{-x+1}\rho, \nu^{a+k+n-i}\rho]), \delta([\nu^{-x_{i-1}+1}\rho, \nu^{a+k+n-i+1}\rho]), \dots,$$
$$\delta([\nu^{-x_1+1}\rho, \nu^{a+k+n-1}\rho])) \rtimes \sigma,$$

(3) $y = a+k$, $a-1 \leq -a-n+t+1 < a+k$, $-x_t - 1 > a+k$, $x_t < x$,

$$\pi \leq L(\delta([\nu^a\rho, \nu^{-a-n+t}\rho]), \delta([\nu^{a+1}\rho, \nu^{a+k+1}\rho]), \dots,$$
$$\delta([\nu^{a+n-t-2}\rho, \nu^{a+k+n-t-2}\rho]), \delta([\nu^{-x+1}\rho, \nu^{a+k+n-t-1}\rho]),$$
$$\delta([\nu^{-x_t+1}\rho, \nu^{a+k+n-t}\rho]), \dots, \delta([\nu^{-x_1+1}\rho, \nu^{a+k+n-1}\rho])) \rtimes \sigma.$$

Proof. Since the Jacquet module of $\delta([\nu^x\rho, \nu^y\rho])$ with respect to the appropriate parabolic subgroup contains $\nu^y\rho \otimes \cdots \otimes \nu^x\rho$, using Theorems 2.1 and 2.2 we deduce that there is an irreducible representation π_1 of the form

$$L(\delta([\nu^{y_1}\rho, \nu^{x_1-1}\rho]), \dots, \delta([\nu^{y_t}\rho, \nu^{x_t-1}\rho]), \delta([\nu^{y_{t+1}}\rho, \nu^{-a-n+t+1}\rho])),$$

where $y_i < y_{i+1}$ for $i = 1, 2, \dots, t$, a d such that $a-1 \leq d \leq a+k$, and an irreducible constituent $\delta' \otimes \sigma'$ of $\mu^*(\sigma)$ such that

$$\delta([\nu^x\rho, \nu^y\rho]) \leq \pi_1 \times \delta([\nu^{d+1}\rho, \nu^{a+k}\rho]) \times \delta'.$$

Since $x + y < 0$ and σ is square-integrable, some of the segments

$$[\nu^{y_1}\rho, \nu^{x_1-1}\rho], \dots, [\nu^{y_t}\rho, \nu^{x_t-1}\rho], [\nu^{y_{t+1}}\rho, \nu^{-a-n+t+1}\rho]$$

have to be non-empty. Lemma 5.2 implies that $\mu^*(\sigma)$ contains neither an irreducible constituent of the form $\delta([\nu^{x_i}\rho, \nu^y\rho]) \otimes \sigma''$ for $x_i \leq y \leq x_{i+1} - 2$, $i \in \{1, 2, \dots, t-1\}$, nor an irreducible constituent of the form $\delta([\nu^{x_t}\rho, \nu^y\rho]) \otimes \sigma''$ for $x_t \leq y \leq -a-n+t$. Consequently, exactly one of the segments $[\nu^{y_1}\rho, \nu^{x_1-1}\rho], \dots, [\nu^{y_t}\rho, \nu^{x_t-1}\rho]$, $[\nu^{y_{t+1}}\rho, \nu^{-a-n+t+1}\rho]$ is non-empty, since otherwise $m^*(\pi_1 \times \delta([\nu^{d+1}\rho, \nu^{a+k}\rho]) \times \delta')$ does not contain $\nu^y\rho \otimes \cdots \otimes \nu^x\rho$, by Theorem 2.1 and multiplicativity of m^*.

Thus, either there are c and d such that $a+n-t-1 \leq c \leq -x_t - 1$ and $a-1 \leq d \leq a+k$, and an irreducible constituent $\delta' \otimes \sigma'$ of $\mu^*(\sigma)$ such that

$$\delta([\nu^x\rho, \nu^y\rho]) \leq \delta([\nu^{-c}\rho, \nu^{-a-n+t+1}\rho]) \times \delta([\nu^{d+1}\rho, \nu^{a+k}\rho]) \times \delta' \tag{5.1}$$

and

$$\pi \leq L(\delta([\nu^a\rho,\nu^d\rho]),\delta([\nu^{a+1}\rho,\nu^{a+k+1}\rho]),\dots,\delta([\nu^{a+n-t-2}\rho,\nu^{a+k+n-t-2}\rho]),\\ \delta([\nu^{c+1}\rho,\nu^{a+k+n-t-1}\rho]),\delta([\nu^{-x_t+1}\rho,\nu^{a+k+n-t}\rho]),\dots,\\ \delta([\nu^{-x_1+1}\rho,\nu^{a+k+n-1}\rho]))\rtimes\sigma',$$

or there is an $i\in\{1,2,\dots,t\}$, c and d such that $-x_i-1\leq c\leq -x_{i-1}-1$, with $x_0=-a-k-n$, $a-1\leq d\leq a+k$, and an irreducible constituent $\delta'\otimes\sigma'$ of $\mu^*(\sigma)$ such that

$$\delta([\nu^x\rho,\nu^y\rho])\leq\delta([\nu^{-c}\rho,\nu^{x_i-1}\rho])\times\delta([\nu^{d+1}\rho,\nu^{a+k}\rho])\times\delta' \tag{5.2}$$

and

$$\pi \leq L(\delta([\nu^a\rho,\nu^d\rho]),\delta([\nu^{a+1}\rho,\nu^{a+k+1}\rho]),\dots,\delta([\nu^{a+n-t-1}\rho,\nu^{a+k+n-t-1}\rho]),\\ \delta([\nu^{-x_t+1}\rho,\nu^{a+k+n-t}\rho]),\dots,\delta([\nu^{-x_{i+1}+1}\rho,\nu^{a+k+n-i-1}\rho]),\\ \delta([\nu^{c+1}\rho,\nu^{a+k+n-i}\rho]),\delta([\nu^{-x_{i-1}+1}\rho,\nu^{a+k+n-i+1}\rho]),\dots,\\ \delta([\nu^{-x_1+1}\rho,\nu^{a+k+n-1}\rho]))\rtimes\sigma'.$$

In the same way as in the proof of Proposition 5.3 we deduce $-a-n+t+1\leq y\leq a+k$. If $y=-a-n+t+1$, we conclude at once that $d=a+k$ and $\sigma'\cong\sigma$. If $-a-n+t+1<y<a+k$, then $d=a+k$ and $\mu^*(\sigma)$ contains an irreducible constituent of the form $\delta([\nu^z\rho,\nu^y\rho])\otimes\sigma''$ for $z\leq -a-n+t+2$, which contradicts the third part of Lemma 5.2.

It remains to consider the case $y=a+k$. Using Lemma 5.2 we deduce $d<a+k$.

If (5.1) holds, $d>-a-n+t+1$ implies $\delta'\cong\delta([\nu^{-a-n+t+2}\rho,\nu^d\rho])$, which is impossible by the third part of Lemma 5.2. Thus $d=-a-n+t+1$ and $\sigma'\cong\sigma$. Note that this case appears when $x_t<-a-k-1$.

Suppose that (5.2) holds and note that there is a unique $i\in\{1,2,\dots,t\}$ such that $x_i-1\geq a-1$ and $a+k<-x_{i-1}-1$. Let us suppose that $d>x_i-1$. This implies $\delta\cong\delta([\nu^{x_i}\rho,\nu^d\rho])$, so $2d+1\in\mathrm{Jord}_\rho(\sigma)$. Since σ is square-integrable, we have $d>-x_i$.

If $a+n-1>0$, we have $2z+1\notin\mathrm{Jord}_\rho(\sigma)$ for $z\leq -a$ and, by Lemma 5.2 and [22, Proposition 7.2], $\mu^*(\sigma)$ does not contain an irreducible constituent of the form $\delta([\nu^{x_i}\rho,\nu^d\rho])\otimes\sigma'$ for $x_i\leq 0$ and $d\leq a+k$.

On the other hand, if $a+n-1<0$, we have $d>-a-n+i$, and $2d+1\in\mathrm{Jord}_\rho(\sigma)$ implies $d>-a$. Since $d<a+k$ and $x_i\leq 0$, this is impossible by the third part of Lemma 5.2. Thus, $d=x_i-1$ and $\sigma'\cong\sigma$. □

Proposition 5.5. *Suppose that $\delta([\nu^{a+i}\rho,\nu^{a+k+i}\rho])\rtimes\sigma$ is irreducible for all $i\in\{0,1,\dots,n-1\}$. Suppose that $\delta([\nu^x\rho,\nu^y\rho])\otimes\pi$, $x+y<0$, is an*

irreducible constituent of

$$\mu^*(L(\delta([\nu^a\rho,\nu^{x_1}\rho]),\dots,\delta([\nu^{a+t-1}\rho,\nu^{x_t}\rho]),\delta([\nu^{a+t}\rho,\nu^{a+k+t}\rho]),\dots,$$
$$\delta([\nu^{a+n-t-r-s-1}\rho,\nu^{a+k+n-t-r-s-1}\rho]),\delta([\nu^{-y_s+1}\rho,\nu^{a+k+n-t-r-s}\rho]),\dots,$$
$$\delta([\nu^{-y_1+1}\rho,\nu^{a+k+n-t-r-1}\rho]),\delta([\nu^{-z_t+1}\rho,\nu^{a+k+n-t-r}\rho]),\dots,$$
$$\delta([\nu^{-z_1+1}\rho,\nu^{a+k+n-r-1}\rho]),\delta([\nu^{-w_r+1}\rho,\nu^{a+k+n-r}\rho]),\dots,$$
$$\delta([\nu^{-w_1+1}\rho,\nu^{a+k+n-1}\rho]))\rtimes\sigma),$$

where $y\geq a+k+t-1$, r,s,t *are non-negative integers such that* $t\geq 1$ *and* $2t+s+r<n$, *and*

(1) $a+i-2\leq x_i<a+k+i-1$ *for* $i=1,2,\dots,t$, $x_i<x_{i+1}$ *for* $i=1,2,\dots,t-1$, *if* $x_i\geq 0$ *then* $x_i=-a-n+r+i$, *and if* $x_i<0$ *then* $x_i<a+n-r-i-1$,
(2) $-a-k-n+t+r+i\leq y_i<a+n-t-r-i$ *for* $i=1,2,\dots,s$, $y_i<y_{i+1}$ *for* $i=1,2,\dots,s-1$,
(3) $-a-k-n+r+i\leq z_i<-a-k-i+1$ *for* $i=1,2,\dots,t$, $z_i<z_{i+1}$ *for* $i=1,2,\dots,t-1$, $z_i\leq x_i$ *for* $i=1,2,\dots,t$,
(4) $-a-k-n+i\leq w_i<a+n-i$ *for* $i=1,2,\dots,r$, $w_i<w_{i+1}$ *for* $i=1,2,\dots,r-1$,
(5) $z_1>w_r$ *if* $r\geq 1$, *and* $y_1>x_t+1$ *if* $s\geq 1$.

Then $y=a+k+t$, *and one of the following holds:*

- $s=0$, $a+t-1\leq -a-n+t+r+1<a+k+t$, $z_t<-a-n+t+r+2$, *and*

$$\pi\leq L(\delta([\nu^a\rho,\nu^{x_1-1}\rho]),\dots,\delta([\nu^{a+t-1}\rho,\nu^{x_t-1}\rho]),\delta([\nu^{a+t}\rho,\nu^{-a-n+t+r+1}\rho]),$$
$$\delta([\nu^{a+t+1}\rho,\nu^{a+k+t+1}\rho]),\dots,\delta([\nu^{a+n-t-r-2}\rho,\nu^{a+k+n-t-r-2}\rho]),$$
$$\delta([\nu^{-x+1}\rho,\nu^{a+k+n-t-r-1}\rho]),\delta([\nu^{-z_t+1}\rho,\nu^{a+k+n-t-r}\rho]),\dots,$$
$$\delta([\nu^{-z_1+1}\rho,\nu^{a+k+n-r-1}\rho]),\delta([\nu^{-w_r+1}\rho,\nu^{a+k+n-r}\rho]),\dots,$$
$$\delta([\nu^{-w_1+1}\rho,\nu^{a+k+n-1}\rho]))\rtimes\sigma,$$

- $s\geq 1$, $a+t\leq y_1<a+k+t$, *and*

$$\pi\leq L(\delta([\nu^a\rho,\nu^{x_1-1}\rho]),\dots,\delta([\nu^{a+t-1}\rho,\nu^{x_t-1}\rho]),\delta([\nu^{a+t}\rho,\nu^{y_1-1}\rho]),$$
$$\delta([\nu^{a+t+1}\rho,\nu^{a+k+t+1}\rho]),\dots,\delta([\nu^{a+n-t-r-s-1}\rho,\nu^{a+k+n-t-r-s-1}\rho]),$$
$$\delta([\nu^{-y_s+1}\rho,\nu^{a+k+n-t-r-s}\rho]),\dots,\delta([\nu^{-y_2+1}\rho,\nu^{a+k+n-t-r-2}\rho]),$$
$$\delta([\nu^{-x+1}\rho,\nu^{a+k+n-t-r-1}\rho]),\delta([\nu^{-z_t+1}\rho,\nu^{a+k+n-t-r}\rho]),\dots,$$
$$\delta([\nu^{-z_1+1}\rho,\nu^{a+k+n-r-1}\rho]),\delta([\nu^{-w_r+1}\rho,\nu^{a+k+n-r}\rho]),\dots,$$
$$\delta([\nu^{-w_1+1}\rho,\nu^{a+k+n-1}\rho]))\rtimes\sigma.$$

PROOF. In the same way as in the proofs of previous two propositions we conclude $y = a + k + t$. Using Theorems 2.1 and 2.2, we obtain that there is an irreducible representation π_1 of the form

$$L(\delta([\nu^{b_1}\rho, \nu^{x_1}\rho]), \dots, \delta([\nu^{b_t}\rho, \nu^{x_t}\rho]), \delta([\nu^{b_{t+1}}\rho, \nu^{a+k+t}\rho])),$$

where $b_i < b_{i+1}$ for $i = 1, 2, \dots, t$, an irreducible representation π_2 of the form

$$L(\delta([\nu^{c_1}\rho, \nu^{w_1-1}\rho]), \dots, \delta([\nu^{c_{r+t+s}}\rho, \nu^{y_s-1}\rho]), \delta([\nu^{c_{r+s+t+1}}\rho, \nu^{-a-n+t+r+s+1}\rho])),$$

where $c_i < c_{i+1}$ for $i = 1, 2, \dots, r + s + t + 1$, and an irreducible constituent $\delta' \otimes \sigma'$ of $\mu^*(\sigma)$ such that

$$\delta([\nu^{x}\rho, \nu^{a+k+t}\rho]) \leq \pi_1 \times \pi_2 \times \delta'.$$

The segment $[\nu^{b_{t+1}}\rho, \nu^{a+k+t}\rho]$ is obviously non-empty, and since $x + a + k + t < 0$ and σ is square-integrable it follows that at least one of the segments $[\nu^{c_1}\rho, \nu^{w_1-1}\rho], \dots, [\nu^{c_{r+t+s}}\rho, \nu^{y_s-1}\rho], [\nu^{c_{r+s+t+1}}\rho, \nu^{-a-n+t+r+s+1}\rho]$ is also non-empty.

Conditions $(1) - (5)$, together with Lemma 5.2, imply that if $\mu^*(\sigma)$ contains an irreducible constituent of the form $\delta([\nu^{d_1}\rho, \nu^{d_2}\rho]) \otimes \sigma''$ for $d_1 \leq d_2$ and $d_1 \in \{w_1, \dots, w_r, z_1, \dots, z_t, y_1, \dots, y_s\}$, then $d_2 > a + k + t$. Using the condition (1) and Lemma 5.2 we conclude that $\mu^*(\sigma)$ does not contain an irreducible constituent of the form $\delta([\nu^{x_i+1}\rho, \nu^{d}\rho]) \otimes \sigma''$ for $x_i + 1 \leq d \leq a + k + t$ and $i \in \{1, 2, \dots, t\}$. Consequently, $\sigma' \cong \sigma$.

Also, for all $i \in \{1, 2, \dots, t\}$ we have $z_i < -a - k$ and $x_i \geq a - 1 > -a - k - 1$. Thus, all the segments $[\nu^{c_1}\rho, \nu^{w_1-1}\rho], \dots, [\nu^{c_{r+t}}\rho, \nu^{z_t-1}\rho]$ are also empty.

If $s \geq 1$, then conditions (1) and (5) imply $y_1 - 1 \geq a + t - 1$ and $b_i > x_i$ for $i = 1, 2, \dots, t$. Consequently,

$$\delta([\nu^{x}\rho, \nu^{a+k+t}\rho]) \leq L(\delta([\nu^{c_{r+t+1}}\rho, \nu^{y_1-1}\rho]), \dots, \delta([\nu^{c_{r+t+s}}\rho, \nu^{y_s-1}\rho]),$$
$$\delta([\nu^{c_{r+s+t+1}}\rho, \nu^{-a-n+t+r+s+1}\rho])) \times \delta([\nu^{b_{t+1}}\rho, \nu^{a+k+t}\rho]),$$

and the claim directly follows.

If $s = 0$, we have at once

$$\delta([\nu^{x}\rho, \nu^{a+k+t}\rho]) \leq \delta([\nu^{c_{r+t+1}}\rho, \nu^{-a-n+t+r+1}\rho]) \times \delta([\nu^{b_{t+1}}\rho, \nu^{a+k+t}\rho]),$$

and it is easy to see that the claim also holds in this case. □

THEOREM 5.6. *Suppose that $\delta([\nu^{a+i}\rho, \nu^{a+k+i}\rho]) \rtimes \sigma$ is irreducible for all $i \in \{0, 1, \dots, n-1\}$. Then $L(\delta([\nu^{a}\rho, \nu^{a+k}\rho]), \dots, \delta([\nu^{a+n-1}\rho, \nu^{a+k+n-1}\rho])) \rtimes \sigma$ is irreducible.*

PROOF. Suppose that $\delta([\nu^{a_1}\rho, \nu^{b_1}\rho])$ and $\delta([\nu^{a_2}\rho, \nu^{b_2}\rho])$ are irreducible representations such that $a_1 + b_1 \leq a_2 + b_2$ and $b_1 \geq b_2$. Then we have $a_1 \leq a_2$, so

$$\delta([\nu^{a_1}\rho, \nu^{b_1}\rho]) \times \delta([\nu^{a_2}\rho, \nu^{b_2}\rho]) \cong \delta([\nu^{a_2}\rho, \nu^{b_2}\rho]) \times \delta([\nu^{a_1}\rho, \nu^{b_1}\rho]).$$

Let us denote an irreducible subquotient of $L(\delta([\nu^a\rho,\nu^{a+k}\rho]),\dots,\delta([\nu^{a+n-1}\rho,\nu^{a+k+n-1}\rho]))\rtimes\sigma$ by π. If π is tempered, using the cuspidal support considerations and the fact that $2(a+k+n-1)+1\in \mathrm{Jord}_\rho(\sigma)$, we conclude that π is a subrepresentation of an induced representation of the form $\delta([\nu^{-a-k-n+1}\rho,\nu^{a+k+n-1}\rho])\rtimes\tau$, which is impossible since

$$\mu^*(L(\delta([\nu^a\rho,\nu^{a+k}\rho]),\dots,\delta([\nu^{a+n-1}\rho,\nu^{a+k+n-1}\rho]))\rtimes\sigma)$$

does not contain an irreducible constituent of the form $\nu^{a+k+n-1}\rho\otimes\pi'$.

Using the Langlands classification, together with Lemma 5.1 and the discussion from the beginning of the proof, we conclude that there are $\delta_1,\delta_2,\dots,\delta_m$, $\delta_i\cong\delta([\nu^{c_i}\rho,\nu^{d_i}\rho])$ such that $c_i+d_i<0$ for $i=1,2,\dots,m$, $d_i\le d_{i+1}$ for $i=1,2,\dots,m-1$, and an irreducible tempered representation $\tau\in R(G)$ such that π is a unique irreducible subrepresentation of $\delta_1\times\delta_2\times\cdots\times\delta_m\rtimes\tau$.

Let $\pi^{(m)}\cong\tau$. Using the Frobenius reciprocity, together with the transitivity of Jacquet modules, we deduce that there exist irreducible representations $\pi^{(1)},\dots,\pi^{(m-1)}\in R(G)$ such that $\mu^*(\pi)$ contains $\delta_1\otimes\pi^{(1)}$, $\mu^*(\pi^{(i)})$ contains $\delta_{i+1}\otimes\pi^{(i+1)}$, for $i=1,\dots,m-2$, and the Jacquet module of $\pi^{(i)}$ with respect to the appropriate parabolic subgroup contains $\delta_{i+1}\otimes\cdots\otimes\delta_m\otimes\tau$, for $i=1,\dots,m-1$.

Using Proposition 5.3, we obtain an irreducible representation $L_1\in R(GL)$ such that $\pi^{(1)}\le L_1\rtimes\sigma$. If $m\ge 2$, using either Proposition 5.4 or Proposition 5.5, we obtain an irreducible representation $L_2\in R(GL)$ such that $\pi^{(2)}\le L_2\rtimes\sigma$.

Continuing in the same way, using a repeated application of Propositions 5.4 and 5.5, we conclude that τ is an irreducible subquotient of the induced representation $L_m\rtimes\sigma$, where L_m is a representation of the form

$$\begin{gathered}L(\delta([\nu^a\rho,\nu^{x_1}\rho]),\dots,\delta([\nu^{a+t-1}\rho,\nu^{x_t}\rho]),\delta([\nu^{a+t}\rho,\nu^{a+k+t}\rho]),\dots,\\ \delta([\nu^{a+n-s-1}\rho,\nu^{a+k+n-s-1}\rho]),\delta([\nu^{-y_s+1}\rho,\nu^{a+k+n-s}\rho]),\dots,\\ \delta([\nu^{-y_1+1}\rho,\nu^{a+k+n-1}\rho])),\end{gathered}$$

where s and t are non-negative integers such that $s+t\ge n$, $a+t-1\le 0$, $a-i-2\le x_i\le a+k+i-1$, and if $x_i<a+k+i-1$ then $x_i<-a+i+2$ for $i=1,2,\dots,t$, $x_i<x_{i+1}$, for $i=1,2,\dots,t-1$, $-a-k-n+i+1\le y_i\le -a-n+i+2$, for $i=1,2,\dots,s$, $y_i<y_{i+1}$ for $i=1,2,\dots,s-1$.

Suppose that $\tau\ncong\sigma$ and let x be such that $\nu^x\rho$ appears in the cuspidal support of L_m and for every $\nu^y\rho$ appearing in the cuspidal support of L_m we have $|y|\le|x|$. Then $|x|\in\{a+k,,\dots,a+k+n-1,-a,\dots,-a-n+1\}$, so $2|x|+1\in\mathrm{Jord}_\rho(\sigma)$. Using the cuspidal support considerations we conclude that τ can be written as a subrepresentation of an induced representation of the form $\delta([\nu^{-|x|}\rho,\nu^{|x|}\rho])\rtimes\tau'$. Using Theorem 2.2, the square-integrability of σ, and Theorem 2.1, we conclude at once that $\mu^*(\sigma)$ contains an irreducible constituent of the form $\delta([\nu^z\rho,\nu^{|x|}\rho])\otimes\pi'$, for $-|x|<z\le|x|$. By Lemma 5.2

this is possible only if $|x| = a+k$, and Theorem 2.2 implies $z \leq -a+1$, which contradicts the part (3) of Lemma 5.2. Thus, $\tau \cong \sigma$.

If $c_i = -a-n+i$ for $i = 1, 2, \dots, m$, using a repeated application of the first part of Proposition 5.4 we get

$$\pi \cong L(\delta([\nu^{-a-k-n+1}\rho, \nu^{-a-n+1}\rho]), \dots, \delta([\nu^{-a-k}\rho, \nu^{-a}\rho]); \sigma).$$

If there is an $i \in \{1, 2, \dots, m\}$ such that $c_i \neq -a-n+i$, using the second and the third part of Proposition 5.4, and Proposition 5.5 repeatedly, we deduce that $d_i < d_{i+1}$ for $i = 1, 2, \dots, m-1$, and there are non-negative integers t_1, t_2, $0 \leq t_1 < t_2 \leq n-1$ such that $c_m = -a-k-t_2$ and $d_m = a+k+t_1$. By [12, Theorem 3.2], the induced representation $\delta([\nu^{-a-k-t_2}\rho, \nu^{a+k+t_1}\rho]) \rtimes \sigma$ is irreducible so

$$\delta([\nu^{-a-k-t_2}\rho, \nu^{a+k+t_1}\rho]) \rtimes \sigma \cong \delta([\nu^{-a-k-t_1}\rho, \nu^{a+k+t_2}\rho]) \rtimes \sigma.$$

Since $d_i < a+k+t_2 \leq a+k+t_1-1$, an easy commuting argument shows that π is a subrepresentation of an induced representation of the form $\nu^{a+k+t_2}\rho \rtimes \pi''$, but it follows directly from Theorem 2.2 and Lemma 5.2 that $\mu^*(L(\delta([\nu^a\rho, \nu^{a+k}\rho]), \dots, \delta([\nu^{a+n-1}\rho, \nu^{a+k+n-1}\rho])) \rtimes \sigma)$ does not contain an irreducible constituent of the form $\nu^{a+k+t_2}\rho \otimes \pi''$.

Consequently, every irreducible subquotient of

$$L(\delta([\nu^a\rho, \nu^{a+k}\rho]), \dots, \delta([\nu^{a+n-1}\rho, \nu^{a+k+n-1}\rho])) \rtimes \sigma$$

is isomorphic to $L(\delta([\nu^{-a-k-n+1}\rho, \nu^{-a-n+1}\rho]), \dots, \delta([\nu^{-a-k}\rho, \nu^{-a}\rho]); \sigma)$, and it is an easy consequence of Theorem 2.2 that it appears in the composition series of $L(\delta([\nu^a\rho, \nu^{a+k}\rho]), \dots, \delta([\nu^{a+n-1}\rho, \nu^{a+k+n-1}\rho])) \rtimes \sigma$ with multiplicity one. Thus, $L(\delta([\nu^a\rho, \nu^{a+k}\rho]), \dots, \delta([\nu^{a+n-1}\rho, \nu^{a+k+n-1}\rho])) \rtimes \sigma$ is irreducible. □

In the rest of this section we shortly comment the remaining cases. We begin by recalling a well-known result.

LEMMA 5.7. *(1) If $\mu^*(\sigma)$ contains an irreducible constituent of the form $\nu^x\rho_1 \otimes \pi$, for an irreducible cuspidal representation $\rho_1 \in R(GL)$, then ρ_1 is F'/F-selfdual.*

(2) Suppose that $\rho_1 \in R(GL)$ is an irreducible cuspidal F'/F-selfdual representation and let α be such that $\nu^\alpha\rho_1 \rtimes \sigma_{cusp}$ reduces. If $\mu^*(\sigma)$ contains an irreducible constituent of the form $\nu^x\rho_1 \otimes \pi$ then $x - \alpha \in \mathbb{Z}$.

THEOREM 5.8. *Suppose that ρ is not F'/F-selfdual. Then*

$$L(\delta([\nu^a\rho, \nu^{a+k}\rho]), \dots, \delta([\nu^{a+n-1}\rho, \nu^{a+k+n-1}\rho])) \rtimes \sigma$$

is irreducible.

PROOF. Inspecting the cuspidal support of

$$L(\delta([\nu^a\rho, \nu^{a+k}\rho]), \dots, \delta([\nu^{a+n-1}\rho, \nu^{a+k+n-1}\rho])) \rtimes \sigma$$

we conclude that it does not contain an irreducible tempered subquotient.

Using Lemma 5.1, in the same way as in the proof of Theorem 5.6 we write an irreducible non-tempered subquotient π of $L(\delta([\nu^a\rho,\nu^{a+k}\rho]),\dots,\delta([\nu^{a+n-1}\rho,\nu^{a+k+n-1}\rho]))\rtimes\sigma$ as a unique irreducible subrepresentation of $\delta_1\times\delta_2\times\cdots\times\delta_m\rtimes\tau$, for $\delta_1,\delta_2,\dots,\delta_m$, $\delta_i\cong\delta([\nu^{c_i}\rho_1,\nu^{d_i}\rho_1])$ such that $c_i+d_i<0$ for $i=1,2,\dots,m$, $d_i\le d_{i+1}$ for $i=1,2,\dots,m-1$, and an irreducible tempered representation $\tau\in R(G)$. Here $\rho_1=\widetilde{\rho}$ if $F=F'$, and $\rho_1=\widehat{\rho}$ otherwise.

Using the first part of Lemma 5.7, in the same way as in the proof of Propositions 5.3 and 5.4 we deduce that for $i=1,2,\dots,m$ we have $d_i=-a-n+i$ and $c_i<c_{i+1}$ for $i=1,2,\dots,m-1$. Thus, $m\le n$ and τ is an irreducible subquotient of

$$L(\delta([\nu^a\rho,\nu^{a+k}\rho]),\dots,\delta([\nu^{a+n-m-1}\rho,\nu^{a+k+n-m-1}\rho]),$$
$$\delta([\nu^{-c_m+1}\rho,\nu^{a+k+n-m}\rho]),\dots,\delta([\nu^{-c_1+1}\rho,\nu^{a+k+n-1}\rho]))\rtimes\sigma.$$

Using the cuspidal support considerations again, we conclude $m=n$ and $c_i=-a-k-n+i$ for $i=1,2,\dots,n$. Now irreducibility of $L(\delta([\nu^a\rho,\nu^{a+k}\rho]),\dots,\delta([\nu^{a+n-1}\rho,\nu^{a+k+n-1}\rho]))\rtimes\sigma$ can be obtained in the same way as in the proof of Theorem 5.6. □

THEOREM 5.9. *Suppose that ρ is F'/F-selfdual and for α such that $\nu^\alpha\rho\rtimes\sigma_{cusp}$ reduces we have $a-\alpha\notin\mathbb{Z}$. Then*

$$L(\delta([\nu^a\rho,\nu^{a+k}\rho]),\dots,\delta([\nu^{a+n-1}\rho,\nu^{a+k+n-1}\rho]))\rtimes\sigma$$

is irreducible.

PROOF. If $2a\notin\mathbb{Z}$, the proof follows in the same way as the one of Theorem 5.8.

Suppose that $2a\in\mathbb{Z}$. Then the induced representation $L(\delta([\nu^a\rho,\nu^{a+k}\rho]),\dots,\delta([\nu^{a+n-1}\rho,\nu^{a+k+n-1}\rho]))\rtimes\sigma$ does not contain a discrete series subquotient.

Since $\nu^{a+k+n-1}\rho$ appears in the cuspidal support of $L(\delta([\nu^a\rho,\nu^{a+k}\rho]),\dots,\delta([\nu^{a+n-1}\rho,\nu^{a+k+n-1}\rho]))\rtimes\sigma$ exactly once, and for $x\ne a+k+n-1$ such that $\nu^x\rho$ appears in the cuspidal support of $L(\delta([\nu^a\rho,\nu^{a+k}\rho]),\dots,\delta([\nu^{a+n-1}\rho,\nu^{a+k+n-1}\rho]))$ we have $|x|<a+k+n-1$, it follows that $L(\delta([\nu^a\rho,\nu^{a+k}\rho]),\dots,\delta([\nu^{a+n-1}\rho,\nu^{a+k+n-1}\rho]))\rtimes\sigma$ does not contain an irreducible tempered subquotient.

We note that in the considered case the statements of Propositions 5.3, 5.4 and 5.5 also hold, and can be proved in an analogous way, just more easily, using the second part of Lemma 5.7 instead of Lemma 5.2. Now the rest of the proof follows in the same way as in the one of Theorem 5.6, details being left to the reader. □

Acknowledgements.
The author would like to thank the reviewer for the helpful suggestions.

References

[1] J. Arthur, The endoscopic classification of representations. Orthogonal and symplectic groups, American Mathematical Society, Providence, RI, 2013.
[2] H. Atobe, *On the socles of certain parabolically induced representations of p-adic classical groups,* Represent. Theory **26** (2022), 515–541.
[3] B. Bošnjak, *Representations induced from cuspidal and ladder representations of classical p-adic groups,* Proc. Amer. Math. Soc. **149** (2021), 5081–5091.
[4] W. T. Gan and L. Lomelí, *Globalization of supercuspidal representations over function fields and applications,* J. Eur. Math. Soc. (JEMS) **20** (2018), 2813–2858.
[5] C. Jantzen, *On supports of induced representations for symplectic and odd-orthogonal groups,* Amer. J. Math. **119** (1997), 1213–1262.
[6] Y. Kim and I. Matić, *Discrete series of odd general spin groups,* Monatsh. Math., to appear.
[7] A. Kret and E. Lapid, *Jacquet modules of ladder representations,* C. R. Math. Acad. Sci. Paris **350** (2012), 937–940.
[8] E. Lapid and M. Tadić, *Some results on reducibility of parabolic induction for classical groups,* Amer. J. Math. **142** (2020), 505–546.
[9] I. Matić, *On discrete series subrepresentations of the generalized principal series,* Glas. Mat. Ser. III **51** (2016), 125–152.
[10] I. Matić, *Reducibility of representations induced from the Zelevinsky segment and discrete series,* Manuscripta Math. **164** (2021), 349–374.
[11] I. Matić, *Representations induced from the Zelevinsky segment and discrete series in the half-integral case,* Forum Math. **164** (2021), 193–212.
[12] I. Matić, *Irreducibility criteria for the generalized principal series of unitary groups,* Proc. Amer. Math. Soc. **150** (2022), 5009–5021.
[13] I. Matić, *On representations induced from the Zelevinsky segment and a tempered representation in the half-integral case,* J. Algebra Appl. **22** (2023), no. 11, Paper No. 2350238, 41 pp.
[14] C. Mœglin, *Sur la classification des séries discrètes des groupes classiques p-adiques: paramètres de Langlands et exhaustivité,* J. Eur. Math. Soc. (JEMS) **4** (2002), 143–200.
[15] C. Mœglin, *Paquets stables des séries discrètes accessibles par endoscopie tordue; leur paramètre de Langlands*, in: Automorphic forms and related geometry: assessing the legacy of I. I. Piatetski-Shapiro, Amer. Math. Soc., Providence, RI, 2014, 295–336.
[16] C. Mœglin and M. Tadić, *Construction of discrete series for classical p-adic groups,* J. Amer. Math. Soc. **15** (2002), 715–786.
[17] G. Muić, *Composition series of generalized principal series; the case of strongly positive discrete series,* Israel J. Math. **140** (2004), 157–202.
[18] G. Muić, *Reducibility of generalized principal series,* Canad. J. Math. **57** (2005), 616–647.
[19] G. Muić, *Reducibility of standard representations,* Pacific J. Math. **222** (2005), 133–168.
[20] M. Tadić, *Classification of unitary representations in irreducible representations of general linear group (non-Archimedean case),* Ann. Sci. École Norm. Sup. (4) **19** (1986), 335–382.
[21] M. Tadić, *Structure arising from induction and Jacquet modules of representations of classical p-adic groups,* J. Algebra **177** (1995), 1–33.

[22] M. Tadić, *On tempered and square integrable representations of classical p-adic groups,* Sci. China Math. **56** (2013), 2273–2313.
[23] A. V. Zelevinsky, *Induced representations of reductive p-adic groups. II. On irreducible representations of $GL(n)$,* Ann. Sci. École Norm. Sup. (4) **13** (1989), 165–210.

O reducibilnosti reprezentacija induciranih iz esencijalno Spehinih reprezentacija i diskretnih serija

Ivan Matić

Sažetak. Neka je π esencijalno Spehina reprezentacija oblika $L(\delta([\nu^a\rho, \nu^{a+k}\rho]), \dots, \delta([\nu^{a+n-1}\rho, \nu^{a+k+n-1}\rho]))$, pri čemu je ρ ireducibilna kuspidalna reprezentacija opće linearne grupe nad nearhimedskim lokalnim poljem ili njegovim separabilnim kvadratnim proširenjem, $a \leq 0$, $2a + k > 0$ te $n \geq 1$. Neka je σ diskretna serija simplektičke grupe, specijalne neparno ortogonalne grupe ili unitarne grupe. Proučavamo kada se inducirana reprezentacija $\pi \rtimes \sigma$ reducira.

Ivan Matić
School of Applied Mathematics and Informatics
University of Osijek
Trg Ljudevita Gaja 6, 31 000 Osijek, Croatia
E-mail: imatic@mathos.hr

Received: 31.5.2023.
Revised: 27.8.2023.
Accepted: 19.9.2023.

RAD HAZU. MATEMATIČKE ZNANOSTI
Vol. 28 = 558 (2024): 327-337
DOI: https://doi.org/10.21857/yq32oh8v89

SHARPENING THE DIRAC INEQUALITY

Pavle Pandžić and Ana Prlić

Dedicated to Marko Tadić

Abstract. We explain an idea towards a possible proof of a conjecture of Salamanca-Riba and Vogan. This conjecture, also called the Convex hull conjecture, sharpens the well known Dirac inequality of Parthasarathy, which has been useful in several partial classifications of unitary representations of real reductive groups. The idea we present originates from collaboration with David Renard.

1. Introduction

Let G be a connected real reductive Lie group with Cartan involution Θ and let $K = G^\Theta$ be the corresponding maximal compact subgroup of G. Let $\mathfrak{g}_0 = \mathfrak{k}_0 \oplus \mathfrak{p}_0$ be the Cartan decomposition of the Lie algebra of G corresponding to Θ and let $\mathfrak{g}, \mathfrak{k}, \mathfrak{p}$ denote the complexifications of $\mathfrak{g}_0, \mathfrak{k}_0$ and $\mathfrak{p}_0$. Let B be a nondegenerate invariant symmetric bilinear form on $\mathfrak{g}$; for example, we can take the Killing form extended over the center, or the trace form.

The main problem in the representation theory of real reductive Lie groups is the so-called unitary dual problem: determining the set $\hat{G}$ of equivalence classes of the irreducible unitary representations of G. This problem is still considered unsolved in general, although there has been a lot of progress over the past decades. For example, let us mention that there is an algorithm implemented by the atlas software; see [1].

In [14] Salamanca Riba and Vogan conjectured that the study of $\hat{G}$ can be reduced to the study of $(\mathfrak{g}, K)$–modules with unitarily small lowest K-types. The Salamanca-Vogan conjecture was recently proved for the case $G = U(p, q)$ (see [17]). After introducing some basic definitions and results, we will explain our idea that could be helpful for proving the Salamanca-Vogan conjecture in general. Our approach is completely different from the approach used in [17].

2020 *Mathematics Subject Classification.* 22E47.
Key words and phrases. Real reductive group, representation, Harish-Chandra module, Dirac operator, Dirac inequality.

The algebraic Dirac operator D is an element of the tensor product of the universal enveloping algebra $U(\mathfrak{g})$ and the Clifford algebra $C(\mathfrak{p})$ of $\mathfrak{p}$ with respect to B. It is defined as

$$D = \sum_i b_i \otimes d_i \ \in U(\mathfrak{g}) \otimes C(\mathfrak{p}),$$

where b_i is any basis of $\mathfrak{p}$ and d_i is the dual basis with respect to B. Then D is independent of the choice of b_i, and K-invariant for the adjoint action on both factors. The (geometric version of the) Dirac operator was introduced by Parthasarathy [12]. It was used for the construction of the discrete series representations as sections of certain spinor bundles on the homogeneous space G/K.

The Dirac operator is very useful in representation theory; see for example [3], [4]. One of the main uses of the Dirac operator is Parthasarathy's Dirac inequality [13] which we explain below.

Let M be a unitary $(\mathfrak{g}, K)$–module, with an invariant inner product $\langle \cdot \,|\, \cdot \rangle_M$, and let S be a spin module for $C(\mathfrak{p})$. Then the Dirac operator acts on $M \otimes S$. There is a standard inner product $\langle \cdot \,|\, \cdot \rangle_S$ on S such that elements of $\mathfrak{p}_0$ are skew self-adjoint (see [4, 2.3.9] for more details).

Since the elements of $\mathfrak{p}_0$ are skew self-adjoint with respect to $\langle \cdot \,|\, \cdot \rangle_M$ and with respect to $\langle \cdot \,|\, \cdot \rangle_S$, it follows that D is self-adjoint with respect to the inner product on $M \otimes S$ defined by

$$\langle m_1 \otimes s_1 \,|\, m_2 \otimes s_2 \rangle = \langle m_1 \,|\, m_2 \rangle_M \, \langle s_1 \,|\, s_2 \rangle_S, \qquad m_1, m_2 \in M, s_1, s_2 \in S. \tag{1.1}$$

In particular, we have $D^2 \geq 0$ (Parthasarathy's Dirac inequality). This inequality can be written more explicitly. To do that, we recall a formula for D^2 due to Parthasarathy.

Let $\mathrm{Cas}_{\mathfrak{g}}$, $\mathrm{Cas}_{\mathfrak{k}_\Delta}$ denote the Casimir elements of $U(\mathfrak{g})$, $U(\mathfrak{k}_\Delta)$. Here $\mathfrak{k}_\Delta = \Delta(\mathfrak{k})$ is the diagonal copy of $\mathfrak{k}$ in $U(\mathfrak{g}) \otimes C(\mathfrak{p})$ defined by

$$\Delta(X) = X \otimes 1 + 1 \otimes \alpha(X), \qquad X \in \mathfrak{k},$$

where the map $\alpha : \mathfrak{k} \to C(\mathfrak{p})$ is given by

$$\mathfrak{k} \xrightarrow{\mathrm{ad}} \mathfrak{so}(\mathfrak{p}) \cong \bigwedge\nolimits^2 \mathfrak{p} \xhookrightarrow{q} C(\mathfrak{p}).$$

(The map q is the Chevalley map, i.e., the skew symmetrization. It is also called the quantization map.)

Let $\mathfrak{h} = \mathfrak{t} \oplus \mathfrak{a}$ be a fundamental Cartan subalgebra of $\mathfrak{g}$. We choose compatible systems of positive roots for $(\mathfrak{g}, \mathfrak{h})$ and $(\mathfrak{k}, \mathfrak{t})$, and denote by ρ respectively $\rho_{\mathfrak{k}}$ the corresponding half sums of positive roots. The announced formula for D squared is

$$D^2 = -(\mathrm{Cas}_{\mathfrak{g}} \otimes 1 + \|\rho\|^2) + (\mathrm{Cas}_{\mathfrak{k}_\Delta} + \|\rho_{\mathfrak{k}}\|^2).$$

Suppose that M has infinitesimal character corresponding to $\Lambda \in \mathfrak{h}^*$ under the Harish-Chandra isomorphism, and let τ be the highest weight of a $\tilde{K}$-type E_τ appearing in $M \otimes S$. ($\tilde{K}$ is the spin double cover of K.) Then by the relation between Casimir actions and infinitesimal characters, the Dirac inequality $D^2 \geq 0$ on E_τ can be rewritten as

$$\|\Lambda\|^2 \leq \|\tau + \rho_{\mathfrak{k}}\|^2.$$

Dirac inequality was crucial for several partial classifications of unitary modules. For example, Vogan and Zuckerman [16] used the Dirac inequality to classify unitary $(\mathfrak{g}, K)$-modules with nonzero $(\mathfrak{g}, K)$-cohomology. Furthermore, Enright-Howe-Wallach [2] and independently Jakobsen [6] used the Dirac inequality to classify unitary highest weight $(\mathfrak{g}, K)$-modules. More recently, together with Souček, Tuček and Savin we reproved the classification of [2] and [6] in a more elementary way, using the Dirac inequality to full extent [9], [10], [11], [8].

As explained above, the Dirac inequality is a very useful necessary condition for unitarity, but it is by no means a sufficient condition. We mention that a sufficient condition in terms of the Dirac operator is described in [7]. Namely, let us assume that G is simple noncompact (or semisimple with no compact factors). Let $\langle \cdot \,|\, \cdot \rangle_M$ be an inner product on M, not necessarily invariant. We extend $\langle \cdot \,|\, \cdot \rangle_M$ to an inner product $\langle \cdot \,|\, \cdot \rangle$ on $M \otimes S$ in the same way as above, i.e., by (1.1). Suppose that the Dirac operator D is self-adjoint with respect to $\langle \cdot \,|\, \cdot \rangle$. Then the inner product $\langle \cdot \,|\, \cdot \rangle_M$ is $\mathfrak{g}$-invariant, so M is unitary. The reason for this is the fact that D and $1 \otimes \mathfrak{p}$ generate all of $U(\mathfrak{g}) \otimes C(\mathfrak{p})$.

As we already said, if M is unitary with infinitesimal character corresponding to $\Lambda \in \mathfrak{h}^*$, and if $M \otimes S$ contains a K-type E_τ, then the Dirac inequality holds, and on E_τ it can be written as

$$\|\Lambda\|^2 \leq \|\tau + \rho_{\mathfrak{k}}\|^2.$$

If Λ is real, then $\|\Lambda\|$ is the Euclidean norm, so Λ is in a ball of radius $\|\tau + \rho_{\mathfrak{k}}\|$. Let us recall the well known Vogan's conjecture that was formulated in [15] and proved by Huang and Pandžić in [3].

The Dirac cohomology of M is defined as

$$H_D(M) = \ker D / \ker D \cap \mathrm{im} D.$$

Since D is K-invariant, $H_D(M)$ is a module for $\tilde{K}$.

THEOREM 1.1 (Vogan's conjecture; [15], [3]). *Let M be a $(\mathfrak{g}, K)$-module with infinitesimal character corresponding to $\Lambda \in \mathfrak{h}^*$ and suppose that $H_D(M)$ contains a $\tilde{K}$ module E_τ of highest weight $\tau \in \mathfrak{t}^* \subseteq \mathfrak{h}^*$. Then Λ is conjugate to $\tau + \rho_{\mathfrak{k}}$ under the Weyl group of $(\mathfrak{g}, \mathfrak{h})$.*

If M is unitary, then $H_D(M) = \ker D = \ker D^2$. This and Vogan's conjecture imply that the only unitary points on the sphere where Dirac inequality

becomes an equality, have Λ in the Weyl group orbit of $\tau + \rho_{\mathfrak{k}}$. This can be interpreted as a sharpening of the Dirac inequality. Further sharpening has been conjectured by Salamanca-Riba and Vogan:

CONJECTURE 1.2 (Salamanca-Vogan convex hull conjecture; [14], Conjecture 5.7.). *Let M be an irreducible unitary $(\mathfrak{g}, K)$-module with infinitesimal character corresponding to $\Lambda \in \mathfrak{h}^*$ and suppose that $M \otimes S$ contains a $\tilde{K}$-module E_τ of highest weight $\tau \in \mathfrak{t}^* \subseteq \mathfrak{h}^*$. Then Λ is in the convex hull of the Weyl group orbit of $\tau + \rho_{\mathfrak{k}}$.*

For example, if M is spherical (i.e., contains the trivial K–type), then $\tau = \rho_n = \rho - \rho_{\mathfrak{k}}$ appears in $M \otimes S$. So the Dirac inequality says that for unitary M with infinitesimal character Λ,

$$\|\Lambda\|^2 \leq \|\rho\|^2.$$

In this case, the Salamanca-Vogan conjecture says that Λ is in the convex hull of the Weyl group orbit of ρ.

We mention that the Salamanca-Vogan conjecture has recently been replaced by even sharper conjectural inequalities of similar nature; see e.g. [17], where the sharper conjecture is proved for $G = U(p, q)$.

We acknowledge the use of the software system Macaulay2 [5] for the explicit computations of the invariant (2.2) as well as the examples in Sect. 3.

2. SOME IDEAS TOWARDS A POSSIBLE PROOF

The convex hull is defined by linear inequalities on $\mathfrak{h}^*_{\mathbb{R}}$. The set of these inequalities is invariant under the Weyl group $W_{\mathfrak{g}}$, but individual inequalities are not $W_{\mathfrak{g}}$-invariant. Therefore we need the following lemma, which originates from collaboration with David Renard:

LEMMA 2.1. *One can define the same convex hull by polynomial $W_{\mathfrak{g}}$–invariant inequalities.*

PROOF. Suppose that $P_1, \ldots, P_n$ is a Weyl group orbit of polynomials (in our case the P_i are linear). Let $\sigma_1, \ldots, \sigma_n$ be their symmetric combinations. The σ_i are obviously $W_{\mathfrak{g}}$–invariant, and we claim that the inequalities $P_i \geq 0$ define the same set as the inequalities $\sigma_i \geq 0$. Clearly, if all $P_i(x) \geq 0$, then also all $\sigma_i(x) \geq 0$. Conversely, suppose all $\sigma_i(x) \geq 0$. Each $P_i(x)$ satisfies the equation

$$t^n - \sigma_1(x)t^{n-1} + \sigma_2(x)t^{n-2} - \cdots + (-1)^n\sigma_n(x) = 0.$$

The coefficients of this equation alternate, so if $P_i(x) < 0$, then all terms are of the same sign, a contradiction. (This simplification of our original proof is due to Vogan.) ∎

By Harish-Chandra isomorphism, we can associate $z_i \in Z(\mathfrak{g})$ to each σ_i. Since σ_i is also $W_{\mathfrak{k}}$–invariant, it moreover defines $\zeta(z_i) \in Z(\mathfrak{k}_\Delta)$. In the proof of Vogan's conjecture, the main point was to write each $z\otimes 1-\zeta(z)$ as $Da+aD$ for suitable $a \in (U(\mathfrak{g}) \otimes C(\mathfrak{p}))^K$. Here we want to write

$$z_i \otimes 1 - \zeta(z_i) = \sum_j b_j b_j^* \qquad \text{for some } \ b_j \in U(\mathfrak{g}) \otimes C(\mathfrak{p}). \tag{2.1}$$

The star-operation is defined on $\mathfrak{g}$ as the involutory antiauthomorphism whose restriction to $\mathfrak{g}_0$ is -1 and it is extended uniquely to involutive antiautomorphisms of the algebras $U(\mathfrak{g})$ and $C(\mathfrak{p})$. Furthermore, $(u \otimes c)^* = u^* \otimes c^*$ for $u \in U(\mathfrak{g})$ and $c \in C(\mathfrak{p})$. Then for any $b \in U(\mathfrak{g}) \otimes C(\mathfrak{p})$ b^* is formally adjoint to b in any unitary module, so each bb^* acts automatically as positive operator, and therefore $z \otimes 1 - \zeta(z)$ is positive if (2.1) holds.

Example 2.2. Let $G = SU(2,1)$. The (real) Lie algebra of $SU(2,1)$ is $\mathfrak{g}_0 = \mathfrak{su}(2,1)$. The complexification of $\mathfrak{g}_0$ is $\mathfrak{g} = \mathfrak{sl}(3,\mathbb{C})$. The Weyl group is the group of permutations of coordinates, i.e. $W_{\mathfrak{g}} = S_3$.

As usual, $\mathfrak{h}^*_{\mathbb{R}}$ is identified with

$$\{(x,y,z) \in \mathbb{R}^3 \,|\, x+y+z=0\}.$$

The half sum of positive roots is $\rho = (1,0,-1)$. The convex hull of ρ is defined by

$$-1 \le x,y,z \le 1.$$

One orbit for $W_{\mathfrak{g}} = S_3$ is

$$x+1 \ge 0, \quad y+1 \ge 0, \quad z+1 \ge 0,$$

and the other is

$$-x+1 \ge 0, \quad -y+1 \ge 0, \quad -z+1 \ge 0.$$

Making symmetric combinations for each orbit and removing the redundant inequalities leads to the system

$$\begin{aligned} xyz + xy + xz + yz + 1 \ge 0,\\ -xyz + xy + xz + yz + 1 \ge 0. \end{aligned}$$

A basis for $\mathfrak{g}$ is given by:

$$\begin{aligned} &H_1 = e_{11} - e_{33}, \quad H_2 = e_{22} - e_{33}, \quad E = e_{12}, \quad F = e_{21},\\ &E_1 = e_{13}, \quad E_2 = e_{23}, \quad F_1 = e_{31}, \quad F_2 = e_{32}, \end{aligned}$$

where e_{ij} denotes the usual matrix unit: it has the ij entry equal to 1 and all other entries equal to 0. Then the element $z \otimes 1 - \zeta(z)$ of $U(\mathfrak{g}) \otimes C(\mathfrak{p})$ corresponding to the first inequality can be written as

(2.2)
$$2H_1^2 \otimes E_1F_1 - 4H_1H_2 \otimes E_1F_1 + 6EF \otimes E_1F_1 - 6E_2F_2 \otimes E_1F_1 +$$
$$2H_1E \otimes E_2F_1 + 2H_2E \otimes E_2F_1 + 6E_1F_2 \otimes E_2F_1 + 2H_1F \otimes E_1F_2 +$$
$$2H_2F \otimes E_1F_2 + 6E_2F_1 \otimes E_1F_2 - 4H_1H_2 \otimes E_2F_2 + 2H_2^2 \otimes E_2F_2 +$$
$$6EF \otimes E_2F_2 - 6E_1F_1 \otimes E_2F_2 + 4H_1E_1F_1 \otimes 1 - 8H_2E_1F_1 \otimes 1 + 12EE_2F_1 \otimes 1 +$$
$$12FE_1F_2 \otimes 1 - 8H_1E_2F_2 \otimes 1 + 4H_2E_2F_2 \otimes 1 - 6H_1 \otimes E_1F_1 +$$
$$6H_2 \otimes E_1F_1 - 6E \otimes E_2F_1 - 6F \otimes E_1F_2 - 12E_1F_1 \otimes 1 - 12E_2F_2 \otimes 1.$$

We would like to write this element as $\sum_j b_j b_j^*$.

3. A method for finding positive invariants for $SU(2,1)$

Now the idea is to find as many positive K-invariant elements as we can for the case $G = SU(2,1)$. The procedure described below would work equally well in the other rank two cases, $SO(4,1)$ and $Sp(4,\mathbb{R})$.

Let us denote
$$H = e_{11} - e_{22}, \quad z = \frac{1}{3}\left(e_{11} + e_{22} - 2e_{33}\right),$$
and let E, F, E_1, E_2, F_1, F_2 be as in Example 2.2.

The commutation relations are given by

(3.1)
$$\begin{aligned} &[H,E_1] = E_1, \quad [z,E_1] = E_1, \quad [H,E_2] = -E_2, \quad [z,E_2] = E_2 \\ &[H,F_1] = -F_1, \quad [z,F_1] = -F_1, \quad [H,F_2] = F_2, \quad [z,F_2] = -F_2 \\ &[H,E] = 2E, \quad [z,E] = 0, \quad [H,F] = -2F, \quad [z,F] = 0. \end{aligned}$$

Let $\mathfrak{g} = \mathfrak{k} \oplus \mathfrak{p}$ be the Cartan decomposition of $\mathfrak{g}$ corresponding to the usual Cartan involution $\theta(X) = -X^*$. Then
$$\mathfrak{k} = \operatorname{span}_{\mathbb{C}}\{H, E, F, z\} \cong \mathfrak{gl}(2,\mathbb{C}), \qquad \text{and} \qquad \mathfrak{p} = \operatorname{span}_{\mathbb{C}}\{E_1, E_2, F_1, F_2\}.$$
The semisimple part of $\mathfrak{k}$ is
$$\mathfrak{k}_s = \operatorname{span}_{\mathbb{C}}\{H, E, F\} \cong \mathfrak{sl}(2,\mathbb{C}),$$
with H, E and F corresponding to the standard basis of $\mathfrak{sl}(2,\mathbb{C})$, while the center of $\mathfrak{k}$ is equal to $\mathbb{C}z$.

For $n \in \mathbb{N}$, $m \in \frac{1}{3}\mathbb{Z}$, let $V_{(n,m)}$ denote the irreducible $\mathfrak{k}$–module with a highest weight vector x_n such that
$$H \cdot x_n = nx_n, \quad z \cdot x_n = mx_n.$$
Then we have
$$V_{(n,m)} = \operatorname{span}_{\mathbb{C}}\{x_n^{(m)}, x_{n-2}^{(m)}, \ldots, x_{-n+2}^{(m)}, x_{-n}^{(m)}\},$$
where $x_{n-2i}^{(m)} = F^i \cdot x_n^{(m)}$, $i \in \{1, \ldots, n\}$, and then we have

$$H \cdot x^{(m)}_{n-2i} = (n-2i)x^{(m)}_{n-2i}, \qquad i \in \{0,1,\dots,n\};$$
$$z \cdot x^{(m)}_{n-2i} = m x^{(m)}_{n-2i}, \qquad i \in \{0,1,\dots,n\};$$
$$F \cdot x^{(m)}_{n-2i} = x^{(m)}_{n-2(i+1)}, \qquad i \in \{0,1,\dots,n-1\}; \qquad F \cdot x^{(m)}_{-n} = 0;$$
$$E \cdot x^{(m)}_{n-2i} = i(n-i+1)x^{(m)}_{n-2(i-1)}, \qquad i \in \{1,\dots,n\}; \qquad E \cdot x^{(m)}_{n} = 0.$$

We have

$$H^* = H,\ z^* = z,\ E^* = F,\ F^* = E,\ E_i^* = -F_i\ F_i^* = -E_i,\ i \in \{1,2\}.$$

Since $(u \otimes c)^* = u^* \otimes c^*$ for $u \in U(\mathfrak{g}), c \in C(\mathfrak{p})$, it follows that for an element $x^{(m)}_{n-2i} \in V_{(n,m)} \subset U(\mathfrak{g}) \otimes C(\mathfrak{p})$ we have

$$\begin{aligned} H \cdot (x^{(m)}_{n-2i})^* &= [H^*, (x^{(m)}_{n-2i})^*] = [x^{(m)}_{n-2i}, H]^* = -[H, x^{(m)}_{n-2i}]^* \\ &= -((n-2i)x^{(m)}_{n-2i})^* = -(n-2i)(x^{(m)}_{n-2i})^*. \end{aligned} \tag{3.2}$$

Therefore

$$H \cdot (x^{(m)}_{n-2i}(x^{(m)}_{n-2i})^*) = (H \cdot x^{(m)}_{n-2i})(x^{(m)}_{n-2i})^* + x^{(m)}_{n-2i}(H \cdot (x^{(m)}_{n-2i})^*) = 0. \tag{3.3}$$

Similar calculations show that

$$z \cdot (x^{(m)}_{n-2i})^* = -m(x^{(m)}_{n-2i})^*; \qquad z \cdot (x^{(m)}_{n-2i}(x^{(m)}_{n-2i})^*) = 0. \tag{3.4}$$

Furthermore, we have

$$\begin{aligned} E \cdot (x^{(m)}_{n-2i})^* &= [F^*, (x^{(m)}_{n-2i})^*] = [x^{(m)}_{n-2i}, F]^* \\ &= -[F, x^{(m)}_{n-2i}]^* = -(x^{(m)}_{n-2(i+1)})^*, \quad i \in \{0,1,\dots,n-1\} \\ E \cdot (x^{(m)}_{-n})^* &= 0 \end{aligned} \tag{3.5}$$

and

$$\begin{aligned} F \cdot (x^{(m)}_{n-2i})^* &= [E^*, (x^{(m)}_{n-2i})^*] = [x^{(m)}_{n-2i}, E]^* = -[E, x^{(m)}_{n-2i}]^* \\ &= -i(n-i+1)(x^{(m)}_{n-2(i-1)})^*, \quad i \in \{1,\dots,n\} \\ F \cdot (x^{(m)}_{n})^* &= 0. \end{aligned} \tag{3.6}$$

For $V_{(n,m)} = \operatorname{span}_{\mathbb{C}}\{x^{(m)}_n, x^{(m)}_{n-2}, \dots, x^{(m)}_{-n+2}, x^{(m)}_{-n}\} \subset U(\mathfrak{g}) \otimes C(\mathfrak{p})$, let us denote

$$V^*_{(n,m)} = \operatorname{span}_{\mathbb{C}}\{(x^{(m)}_n)^*, (x^{(m)}_{n-2})^*, \dots, (x^{(m)}_{-n+2})^*, (x^{(m)}_{-n})^*\} \subset U(\mathfrak{g}) \otimes C(\mathfrak{p}).$$

It follows from (3.2), (3.4), (3.5) and (3.6) that $V^*_{(n,m)}$ is an irreducible $\mathfrak{k}$-module with a highest weight vector $(x^{(m)}_{-n})^*$. It is clear that an element of the form

$$\sum_{i=0}^{n} \alpha_i (x^{(m)}_{n-2i})(x^{(m)}_{n-2i})^* \in V_{(n,m)} \cdot V^*_{(n,m)}$$

is positive, for all choices of nonnegative integers $\alpha_0, \dots, \alpha_n$ (which are not simultaneously 0). Our next goal is to find (enough) conditions on the constants α_i to ensure that $\sum_{i=0}^n \alpha_i (x_{n-2i}^{(m)})(x_{n-2i}^{(m)})^*$ is $\mathfrak{k}$–invariant.

THEOREM 3.1. *With notation as above, suppose that* $\alpha_{i-1} = i(n-i+1)\alpha_i$ *for all* $i \in \{1, \dots, n\}$. *Then the element*

$$\sum_{i=0}^{n} \alpha_i (x_{n-2i}^{(m)})(x_{n-2i}^{(m)})^* \in V_{(n,m)} \cdot V_{(n,m)}^*$$

is $\mathfrak{k}$*-invariant.*

PROOF. It follows from (3.3) and (3.4) that

$$H \cdot (\sum_{i=0}^{n} \alpha_i (x_{n-2i}^{(m)})(x_{n-2i}^{(m)})^*) = 0 \qquad \text{and} \qquad z \cdot \sum_{i=0}^{n} \alpha_i (x_{n-2i}^{(m)})(x_{n-2i}^{(m)})^* = 0.$$

Furthermore, it follows from (3.6) that

$$\begin{aligned} F \cdot (\sum_{i=0}^{n} \alpha_i (x_{n-2i}^{(m)})(x_{n-2i}^{(m)})^*) &= \alpha_0 x_{n-2}^{(m)} (x_n^{(m)})^* - \alpha_n \cdot n \cdot x_{-n}^{(m)} (x_{-n+2}^{(m)})^* \\ &\quad + \sum_{i=1}^{n-1} \alpha_i ((x_{n-2(i+1)}^{(m)})(x_{n-2i}^{(m)})^* - i(n-i+1)(x_{n-2i}^{(m)})(x_{n-2(i-1)}^{(m)})^*) \\ &= \sum_{i=0}^{n-1} (\alpha_i - (i+1)(n-i)\alpha_{i+1})(x_{n-2(i+1)}^{(m)})(x_{n-2i}^{(m)})^*. \end{aligned}$$

Therefore, if $\alpha_{i-1} = i(n-i+1)\alpha_i$ for all $i \in \{1, \dots, n\}$, or equivalently

$$\alpha_i - (i+1)(n-i)\alpha_{i+1} = 0$$

for all $i \in \{0, 1, \dots, n-1\}$, then $F \cdot (\sum_{i=0}^n \alpha_i (x_{n-2i}^{(m)})(x_{n-2i}^{(m)})^*) = 0$.

We now use (3.5) to conclude

$$\begin{aligned} E \cdot (\sum_{i=0}^{n} \alpha_i (x_{n-2i}^{(m)})(x_{n-2i}^{(m)})^*) &= -\alpha_0 x_n^{(m)} (x_{n-2}^{(m)})^* + n\alpha_n x_{-n+2}^{(m)} (x_{-n}^{(m)})^* \\ &\quad + \sum_{i=1}^{n-1} \alpha_i (i(n-i+1)(x_{n-2(i-1)}^{(m)})(x_{n-2i}^{(m)})^* - (x_{n-2i}^{(m)})(x_{n-2(i+1)}^{(m)})^*) \\ &= \sum_{i=0}^{n-1} (-\alpha_i + (i+1)(n-i)\alpha_{i+1})(x_{n-2i}^{(m)})(x_{n-2(i+1)}^{(m)})^* = 0. \end{aligned}$$

□

Using the above theorem, we can find many positive invariants. In fact, for any highest weight $\mathfrak{sl}(2,\mathbb{C})$-module V contained in $U(\mathfrak{g}) \otimes C(\mathfrak{p})$ we get

a new positive invariant. For example, we can get some familiar positive K-invariants such as minus the $\mathfrak{p}$–Laplacian $-(E_1F_1 + E_2F_2)$, and $\mathrm{Cas}_{\mathfrak{k}}$.

EXAMPLE 3.2. Let $V = \mathrm{span}_{\mathbb{C}}\{E_1, E_2\} \subset U(\mathfrak{g})$ be the two-dimensional $\mathfrak{sl}(2,\mathbb{C})$–module with highest weight 1 and highest weight vector E_1. Then $V^* = \mathrm{span}_{\mathbb{C}}\{E_1^*, E_2^*\} \subset U(\mathfrak{g})$ is the two-dimensional $\mathfrak{sl}(2,\mathbb{C})$-module with highest weight 1 and highest weight vector $E_2^* = -F_2$. Therefore the positive invariant is $-(E_1F_1 + E_2F_2)$.

Similarly, we get $\mathrm{Cas}_{\mathfrak{k}}$ from the three-dimensional $\mathfrak{sl}(2,\mathbb{C})$–module with highest weight 2 and highest weight vector E. A few more complicated examples can be found below.

EXAMPLE 3.3. Let

$$V = \mathrm{span}_{\mathbb{C}}\{EE_1, -HE_1 + EE_2, -2FE_1 - 2HE_2, -6FE_2\} \subset U(\mathfrak{g})$$

be the highest weight $\mathfrak{sl}(2,\mathbb{C})$-module with highest weight 3 and highest weight vector EE_1. Then

$$V^* = \mathrm{span}_{\mathbb{C}}\{-F_1F, F_1H - F_2F, 2F_1E + 2F_2H, 6F_2E\} \subset U(\mathfrak{g})$$

is the highest weight $\mathfrak{sl}(2,\mathbb{C})$-module with highest weight 3 and highest weight vector $6F_2E$. The corresponding positive invariant is therefore

$$\begin{aligned}
&\frac{1}{12}[36(EE_1)(-F_1F) + 12(-HE_1 + EE_2)(F_1H - F_2F)\\
&\quad + 3(-2FE_1 - 2HE_2)(2F_1E + 2F_2H) + (-6FE_2)(6F_2E)]\\
&= -H_1^2E_1F_1 + 2H_1H_2E_1F_1 - H_2^2E_1F_1 - 4EFE_1F_1 - H_1^2E_2F_2\\
&\quad + 2H_1H_2E_2F_2 - H_2^2E_2F_2 - 4EFE_2F_2\\
&\quad + 3H_1E_1F_1 - 3H_2E_1F_1 + 2EE_2F_1 + 2FE_1F_2 + H_1E_2F_2 - H_2E_2F_2.
\end{aligned}$$

EXAMPLE 3.4. Let

$$\begin{aligned}
V = \mathrm{span}_{\mathbb{C}}\{&E_1F_2 \otimes E_1, (E_2F_2 - E_1F_1) \otimes E_1 + E_1F_2 \otimes E_2,\\
&- 2E_2F_1 \otimes E_1 + 2(E_2F_2 - E_1F_1) \otimes E_2, -6E_2F_1 \otimes E_2\} \subset U(\mathfrak{g}) \otimes C(\mathfrak{p})
\end{aligned}$$

be the highest weight $\mathfrak{sl}(2,\mathbb{C})$-module with highest weight 3 and highest weight vector $E_1F_2 \otimes E_1$. Then

$$\begin{aligned}
V^* = \mathrm{span}_{\mathbb{C}}\{&-E_2F_1 \otimes F_1, (E_1F_1 - E_2F_2) \otimes F_1 - E_2F_1 \otimes F_2,\\
&2E_1F_2 \otimes F_1 + 2(E_1F_1 - E_2F_2) \otimes F_2, 6E_1F_2 \otimes F_2\} \subset U(\mathfrak{g}) \otimes C(\mathfrak{p})
\end{aligned}$$

is the highest weight $\mathfrak{sl}(2,\mathbb{C})$-module with highest weight 3 and highest weight vector $6E_1F_2 \otimes F_2$. The corresponding positive invariant is therefore

$$\begin{aligned}
&\frac{1}{12}[36(E_1F_2 \otimes E_1)(-E_2F_1 \otimes F_1)\\
&+ 12((E_2F_2 - E_1F_1) \otimes E_1 + E_1F_2 \otimes E_2)((E_1F_1 - E_2F_2) \otimes F_1 - E_2F_1 \otimes F_2)\\
&+ 3(-2E_2F_1 \otimes E_1 + 2(E_2F_2 - E_1F_1) \otimes E_2)(2E_1F_2 \otimes F_1\\
&+ 2(E_1F_1 - E_2F_2) \otimes F_2) + (-6E_2F_1 \otimes E_2)(6E_1F_2 \otimes F_2)]\\
&= -E_1^2F_1^2 \otimes E_1F_1 - 2E_1E_2F_1F_2 \otimes E_1F_1 - E_2^2F_2^2 \otimes E_1F_1 - E_1^2F_1^2 \otimes E_2F_2\\
&- 2E_1E_2F_1F_2 \otimes E_2F_2 - E_2^2F_2^2 \otimes E_2F_2 + H_1E_1F_1 \otimes E_1F_1\\
&+ 3H_2E_1F_1 \otimes E_1F_1 - EE_2F_1 \otimes E_1F_1 - FE_1F_2 \otimes E_1F_1 + H_1E_2F_2 \otimes E_1F_1\\
&+ H_2E_2F_2 \otimes E_1F_1 - EE_1F_1 \otimes E_2F_1 + H_1E_1F_2 \otimes E_2F_1\\
&+ H_2E_1F_2 \otimes E_2F_1 - EE_2F_2 \otimes E_2F_1 - FE_1F_1 \otimes E_1F_2 + H_1E_2F_1 \otimes E_1F_2\\
&+ H_2E_2F_1 \otimes E_1F_2 - FE_2F_2 \otimes E_1F_2 + H_1E_1F_1 \otimes E_2F_2 + H_2E_1F_1 \otimes E_2F_2\\
&- EE_2F_1 \otimes E_2F_2 - FE_1F_2 \otimes E_2F_2 + 3H_1E_2F_2 \otimes E_2F_2\\
&+ H_2E_2F_2 \otimes E_2F_2 - 4E_1F_1 \otimes E_1F_1 - 2E_2F_2 \otimes E_1F_1 - 2E_1F_2 \otimes E_2F_1\\
&- 2E_2F_1 \otimes E_1F_2 - 2E_1F_1 \otimes E_2F_2 - 4E_2F_2 \otimes E_2F_2.
\end{aligned}$$

So far, we have found 80 positive invariants and are still working on expressing the element (2.2) as a positive linear combination of these (and possibly other) positive invariants.

The list of invariants we have constructed so far can be found at the link `https://drive.google.com/file/d/1FKEj4FjJ_sI5waqG6bojcCnffOOZqLBR/view?usp=sharing`.

Acknowledgements.

P. Pandžić and A. Prlić are both supported by the QuantiXLie Center of Excellence, a project cofinanced by the Croatian Government and European Union through the European Regional Development Fund - the Competitiveness and Cohesion Operational Programme (KK.01.1.1.01.0004).

References

[1] J. Adams, M. van Leeuwen, P. Trapa and D. Vogan, *Unitary representations of real reductive groups,* Astérisque **417** (2020), 174 pp.

[2] T. Enright, R. Howe and N. Wallach, *A classification of unitary highest weight modules,* in: Representation theory of reductive groups (Park City, Utah, 1982), Birkhäuser, Boston, 1983, 97–143.

[3] J.-S. Huang and P. Pandžić, *Dirac cohomology, unitary representations and a proof of a conjecture of Vogan,* J. Amer. Math. Soc. **15** (2002), 185–202.

[4] J.-S. Huang and P. Pandžić, Dirac Operators in Representation Theory, Math. Theory Appl., Birkhäuser, Boston, 2006.

[5] D. R. Grayson and M. E. Stillman, *Macaulay2, a software system for research in algebraic geometry*, available at `http://www.math.uiuc.edu/Macaulay2/`

[6] H. P. Jakobsen, *Hermitian symmetric spaces and their unitary highest weight modules,* J. Funct. Anal. **52** (1983), 385–412.

[7] P. Pandžić, *Dirac operators and unitarizability of Harish-Chandra modules*, Math. Commun. **15** (2010), 273–279.
[8] P. Pandžić, A. Prlić, G. Savin, V. Souček and V. Tuček, *On the classification of unitary highest weight modules in the exceptional cases*, in preparation.
[9] P. Pandžić, A. Prlić, V. Souček and V. Tuček, *Dirac inequality for highest weight Harish-Chandra modules I*, Math. Inequalities Appl. **26** (2023), 233–265.
[10] P. Pandžić, A. Prlić, V. Souček and V. Tuček, *Dirac inequality for highest weight Harish-Chandra modules II*, Math. Inequalities Appl. **26** (2023), 729–760.
[11] P. Pandžić, A. Prlić, V. Souček and V. Tuček, *On the classification of unitary highest weight modules*, arXiv:2305.15892.
[12] R. Parthasarathy, *Dirac operator and the discrete series,* Ann. of Math. (2) **96** (1972), 1–30.
[13] R. Parthasarathy, *Criteria for the unitarizability of some highest weight modules,* Proc. Indian Acad. Sci. Sect. A Math. Sci. **89** (1980), 1–24.
[14] S. A. Salamanca-Riba and D. A. Vogan, Jr., *On the classification of unitary representations of reductive Lie groups,* Ann. of Math. (2) **148** (1998), 1067–1133.
[15] D. A. Vogan, Jr., *Dirac operators and unitary representations,* 3 talks at MIT Lie groups seminar, Fall 1997.
[16] D. A. Vogan, Jr. and G. J. Zuckerman, *Unitary representations with nonzero cohomology,* Compositio Math. **53** (1984), 51–90.
[17] K. D. Wong, *On the unitary dual of $U(p,q)$: proof of a conjecture of Salamanca-Riba and Vogan,* arxiv:2210.08684.

Pojačanje Diracove nejednakosti

Pavle Pandžić i Ana Prlić

Sažetak. Objašnjavamo ideju koja vodi ka mogućem dokazu slutnje Salamanca-Ribe i Vogana. Ova slutnja, također nazvana slutnja konveksne ljuske, pojačava dobro poznatu Parthasarathyjevu Diracovu nejednakost, koja je bila korisna u nekoliko parcijalnih klasifikacija unitarnih reprezentacija realnih reduktivnih grupa. Ideja koju predstavljamo proizašla je iz suradnje s Davidom Renardom.

Pavle Pandžić
Department of Mathematics, Faculty of Science, University of Zagreb
Bijenička 30, 10000 Zagreb, Croatia
E-mail: pandzic@math.hr

Ana Prlić
Department of Mathematics, Faculty of Science, University of Zagreb
Bijenička 30, 10000 Zagreb, Croatia
E-mail: anaprlic@math.hr

Received: 14.6.2023.
Revised: 29.7.2023.
Accepted: 19.9.2023.

RAD HAZU. MATEMATIČKE ZNANOSTI
Vol. 28 = 558 (2024): 339-352
DOI: https://doi.org/10.21857/y6zolb4v6m

ON BASES OF $\mathfrak{g}$-INVARIANT ENDOMORPHISM ALGEBRAS

Jing-Song Huang and Yufeng Zhao

To Marko Tadić for his 70th birthday.

Abstract. Let $\mathfrak{g}$ be a complex simple Lie algebra. Let $Z(\mathfrak{g})$ be the center of the universal enveloping algebra $U(\mathfrak{g})$. Let V_λ be the finite-dimensional irreducible $\mathfrak{g}$-module with highest weight λ. Our main result is a criterion of the existence of $Z(\mathfrak{g})$-bases for the $\mathfrak{g}$-invariant endomorphism algebra $R_\lambda =: \mathrm{Hom}_{\mathfrak{g}}(\mathrm{End}\, V_\lambda, U(\mathfrak{g}))$. Then we obtain a Clifford algebra analogue, namely a criterion of the existence $C(\mathfrak{g})^{\mathfrak{g}}$-bases for $R_\lambda^C =: \mathrm{Hom}_{\mathfrak{g}}(\mathrm{End}\, V_\lambda, C(\mathfrak{g}))$. We also describe a criterion of the existence of bases generated by powers of the Casimir element for $R_{\lambda,\nu} =: \mathrm{Hom}_{\mathfrak{g}}(\mathrm{End}\, V_\lambda, \mathrm{End}\, V_\nu)$.

1. Introduction

Let $\mathfrak{g}$ be a complex simple Lie algebra with a Cartan subalgebra $\mathfrak{h}$. Suppose that $\pi\colon \mathfrak{g} \to \mathrm{End}\, W$ is an irreducible finite-dimensional representation of $\mathfrak{g}$. Regarding $\mathrm{End}\, W$ as a $\mathfrak{g}$-module, the space of $\mathfrak{g}$-homomorphisms $\mathrm{Hom}_{\mathfrak{g}}(\mathfrak{g}, \mathrm{End}\, W)$ is called the space of adjoint operators in type $\mathrm{End}\, W$ by physicists [9] (the definition of adjoint operators is given in [9, Definition 1.1], but it will not be needed here). In case $\mathfrak{g} = \mathfrak{sl}(2,\mathbb{C})$, the Wigner-Eckart theorem states that [1, Theorem C. 4]:

$$\dim \mathrm{Hom}_{\mathfrak{sl}(2,\mathbb{C})}(\mathfrak{sl}(2,\mathbb{C}), \mathrm{End}\, W) \leq 1.$$

This formula was generalized to any simple Lie algebra $\mathfrak{g}$ by Okubo and Myung [9], as they showed that

$$\dim \mathrm{Hom}_{\mathfrak{g}}(\mathfrak{g}, \mathrm{End}\, W) \leq r,$$

2020 *Mathematics Subject Classification.* Primary 22E47; Secondary 22E46.
Key words and phrases. Simple Lie algebra, Casimir operator, invariant endomorphism algebra.
The research is supported by the Natural Science Foundation of China (grant 11271460), Guangdong Province (grant 2023A1515012186), Shenzhen City (grant 2022373357) and the Research Grants Council of Hong Kong (grant 16302521).

where $r = \operatorname{rank}\mathfrak{g} = \dim\mathfrak{h}$. Suppose that the highest weight ν of a finite-dimensional simple $\mathfrak{g}$-module V_ν is expressed

$$\nu = m_1\omega_1 + \cdots + m_r\omega_r, \tag{1.1}$$

with fundamental weights $\omega_1, \ldots, \omega_r$ and non-negative integers $m_1, \ldots, m_r$. Then it is shown [9, Theorem 3.1]

$$\dim \operatorname{Hom}_{\mathfrak{g}}(\mathfrak{g}, \operatorname{End} V_\nu) = n(\nu),$$

where $n(\nu)$ is the number of nonzero m_i's in (1.1). In particular, it implies that the adjoint representation of a simple Lie algebra $\mathfrak{g}$ always occurs in $\operatorname{End} W$ for any nontrivial $\mathfrak{g}$-module W.

The above formula is better understood in the framework of $\mathfrak{g}$-invariant endomorphism algebras which we explain now. Let $U(\mathfrak{g})$ be the universal enveloping algebra of $\mathfrak{g}$. There is a surjective homomorphism of algebras

$$\pi_\nu \colon U(\mathfrak{g}) \to \operatorname{End} V_\nu.$$

Then π_ν induces a surjective linear map from the space of universal adjoint operators to the space of adjoint operators in type $\operatorname{End} V_\nu$:

$$A(\mathfrak{g}) = \operatorname{Hom}_{\mathfrak{g}}(\mathfrak{g}, U(\mathfrak{g})) \to \operatorname{Hom}_{\mathfrak{g}}(\mathfrak{g}, \operatorname{End} V_\nu).$$

Since there is an embedding of $\mathfrak{g} \hookrightarrow \operatorname{End} V_\lambda$ for any nontrivial simple $\mathfrak{g}$-module V_λ, we consider the following algebras of $\mathfrak{g}$-endomorphisms:

$$R_\lambda =: (\operatorname{End} V_\lambda \otimes U(\mathfrak{g}))^{\mathfrak{g}} \cong \operatorname{Hom}_{\mathfrak{g}}(\operatorname{End} V_\lambda, U(\mathfrak{g})),$$

and

$$R_{\lambda,\nu} =: (\operatorname{End} V_\lambda \otimes \operatorname{End} V_\nu)^{\mathfrak{g}} \cong \operatorname{Hom}_{\mathfrak{g}}(\operatorname{End} V_\lambda, \operatorname{End} V_\nu).$$

Let V be a $\mathfrak{g}$-module (possibly infinite-dimensional) with an infinitesimal character χ_ν. Kostant [7] proves that the tensor product of $V_\lambda \otimes V$ is of finite length, hence a direct sum of modules with generalized infinitesimal character. Moreover, the occurring characters are of form $\chi_{\nu+\mu_i}$ with μ_i being some weights of V_λ. In Kostant's proof, R_λ and $R_{\lambda,\nu}$ play pivotal roles.

The aim of this paper is to describe bases of R_λ and $R_{\lambda,\nu}$ generated by a Casimir element C, and equivalently by a certain matrix valued element $M_\lambda(C)$ to be defined in the following. Let $Z(\mathfrak{g})$ be the center of $U(\mathfrak{g})$. Kostant [6, Theorem 21] showed that there is a $\mathfrak{g}$-submodule E of $U(\mathfrak{g})$ such that the multiplication

$$Z(\mathfrak{g}) \otimes E \to U(\mathfrak{g})$$

is a $\mathfrak{g}$-module isomorphism. It follows that $U(\mathfrak{g})$ and R_λ are free $Z(\mathfrak{g})$-modules. Consider the map

$$\delta_\lambda : U(\mathfrak{g}) \to \operatorname{End} V_\lambda \otimes U(\mathfrak{g})$$

defined by

$$\delta_\lambda(x) = \pi_\lambda(x) \otimes 1 + 1 \otimes x \text{ for } x \in \mathfrak{g},$$

which extends to a homomorphism of associative algebras. If $u \in Z(\mathfrak{g})$, then $\delta(u)$ is in R_λ.

Let B be the Killing form of $\mathfrak{g}$. Let x_i be a basis of $\mathfrak{g}$ and x_i^* be the dual basis with respect to B. The Casimir element C defined by

$$C = \sum_{i=1}^{m} x_i x_i^*$$

is in $Z(\mathfrak{g})$, and clearly it is independent of choice of the basis x_i. It follows that

$$\delta_\lambda(C) = \pi_\lambda(C) \otimes 1 + \sum_{i=1}^{m} \pi_\lambda(x_i) \otimes x_i^* + \sum_{i=1}^{m} \pi_\lambda(x_i^*) \otimes x_i + 1 \otimes C.$$

We set

$$M_\lambda(C) = \sum_{i=1}^{m} \pi_\lambda(x_i) \otimes x_i^*.$$

It is readily checked that $M_\lambda(C)$ is also independent of choice of the basis x_i, and thus it equals $\sum_{i=1}^{m} \pi_\lambda(x_i^*) \otimes x_i$. Then

$$\delta_\lambda(C) = \pi_\lambda(C) \otimes 1 + 2M_\lambda(C) + 1 \otimes C.$$

We write d_λ for $\dim V_\lambda$. Recall that a principal $\mathfrak{sl}_2$ in $\mathfrak{g}$ is a three-dimensional subalgebra spanned by $\{X, H, Y\}$ in $\mathfrak{g}$ such that

$$[H, X] = 2X,\ [H, Y] = -2Y,\ [X, Y] = H$$

and the orbit of X under the adjoint group of $\mathfrak{g}$ is the principal nilpotent orbit. By a conjugation, we may and will assume that H is in the Cartan subalgebra $\mathfrak{h}$.

Theorem A (Theorem 3.1). *The following assertions are equivalent:*

(i) $1, \delta_\lambda(C), \ldots, \delta_\lambda(C)^{d_\lambda - 1}$ *form a basis of* $Z(\mathfrak{g})$*-module* R_λ.

(ii) $1, M_\lambda(C) \ldots, M_\lambda(C)^{d_\lambda - 1}$ *form a basis of* $Z(\mathfrak{g})$*-module* R_λ.

(iii) V_λ *is irreducible when restricted to a principal* $\mathfrak{sl}_2$ *in* $\mathfrak{g}$.

In Section 3 we obtain a complete list of V_λ's satisfying Condition (iii). In these cases, we get bases of $\mathrm{Hom}_{\mathfrak{g}}(\mathfrak{g}, U(\mathfrak{g}))$ consisting of m_i-th powers of either $\delta_\lambda(C)$ or $M_\lambda(C)$, where m_i's are the exponents of $\mathfrak{g}$ (cf. Section 3 for the definition of exponents).

By a theorem of Kostant [8, Theorem D], the Clifford algebra $C(\mathfrak{g})$ with respect to the Killing form of $\mathfrak{g}$ decomposes into the tensor product

$$C(\mathfrak{g}) = J \otimes E,$$

where $J = C(\mathfrak{g})^{\mathfrak{g}}$ and $E = \mathrm{End}\, V_\rho$. Here (π_ρ, E_ρ) is the irreducible representation of $\mathfrak{g}$ with highest weight ρ. We set the Clifford algebra analogue R_λ^C to

be the invariant endomorphism algebra

$$R_\lambda^C := \mathrm{Hom}_{\mathfrak{g}}(\mathrm{End}\, V_\lambda, C(\mathfrak{g})).$$

Then R_λ^C is a free J-module of rank equal to $\dim R_{\lambda,\rho}$. Note that

$$\rho = \omega_1 + \cdots + \omega_r.$$

For the irreducible representation (π_ρ, E_ρ) of the highest weight ρ, we define the map

$$\delta_{\lambda,\rho} : U(\mathfrak{g}) \to \mathrm{End}\, V_\lambda \otimes \mathrm{End}\, V_\rho$$

by

$$\delta_{\lambda,\rho}(x) = \pi_\lambda(x) \otimes 1 + 1 \otimes \pi_\rho(x) \text{ for } x \in \mathfrak{g},$$

which extends to a homomorphism of associative algebras. Then

$$\delta_{\lambda,\rho}(C) = \pi_\lambda(C) \otimes 1 + 2M_{\lambda,\rho}(C) + 1 \otimes \pi_\rho(C),$$

where

$$M_{\lambda,\rho}(C) = \sum_{i=1}^{m} \pi_\lambda(x_i) \otimes \pi_\rho(x_i^*).$$

Recall that a simple $\mathfrak{g}$-module V_λ is said to be minuscule if $\langle \lambda, \alpha \rangle = 0, -1, 1$ for all roots α (cf. Section 4 for the list of the minuscule representations).

Theorem B (Theorem 4.3). *Assume that λ is minuscule. Then R_λ^C is a free J-module of rank d_λ. Moreover, the following assertions are equivalent:*

(i) $1, \delta_{\lambda,\rho}(C), \ldots, \delta_{\lambda,\rho}(C)^{d_\lambda - 1}$ *form a J-basis of R_λ^C.*

(ii) $1, M_{\lambda,\rho}(C), \ldots, M_{\lambda,\rho}(C)^{d_\lambda - 1}$ *form a J-basis of R_λ^C.*

(iii) $\delta_{\lambda,\rho}(C)$ *acts on the distinct irreducible summands of $V_\lambda \otimes V_\rho$ with distinct eigenvalues.*

Now we consider the map

$$\delta_{\lambda,\nu} : U(\mathfrak{g}) \to \mathrm{End}\, V_\lambda \otimes \mathrm{End}\, V_\nu$$

defined by

$$\delta_{\lambda,\nu}(x) = \pi_\lambda(x) \otimes 1 + 1 \otimes \pi_\nu(x) \text{ for } x \in \mathfrak{g},$$

which extends to a homomorphism of associative algebras. Then

$$\delta_{\lambda,\nu}(C) = \pi_\lambda(C) \otimes 1 + 2M_{\lambda,\mu}(C) + 1 \otimes \pi_\nu(C),$$

where

$$M_{\lambda,\nu}(C) = \sum_{i=1}^{m} \pi_\lambda(x_i) \otimes \pi_\nu(x_i^*).$$

Theorem C (Theorem 4.4). *Let d be a positive integer. The following assertions are equivalent:*

(i) $1, \delta_{\lambda,\nu}(C), \ldots, \delta_{\lambda,\nu}(C)^{d-1}$ *form a basis of $R_{\lambda,\nu}$.*

(ii) $1, M_{\lambda,\nu}(C), \ldots, M_{\lambda,\nu}(C)^{d-1}$ *form a basis a basis of $R_{\lambda,\nu}$.*

(iii) $V_\lambda \otimes V_\nu = \bigoplus_{i=1}^{d} V_{\gamma_i}$ *decomposes into a direct sum of d non-isomorphic simple $\mathfrak{g}$-modules with distinct $\delta_{\lambda,\nu}(C)$-eigenvalues.*

We note that the algebra R_λ was investigated from a different perspective by Kirillov [4, 5] as 'quantum family algebra'. There was following up work on commutativity of R_λ and existence of certain M-type bases for R_λ by Rozhkovskaya [11]. Let $S(\mathfrak{g})$ denote the symmetric algebra of $\mathfrak{g}$. The related associated algebra $(\operatorname{End} V_\lambda \otimes S(\mathfrak{g}))^{\mathfrak{g}}$ is called 'classical family algebra' by Kirillov and it appeared in Panyushev's work on determination of the Dynkin polynomials and calculation of equivariant cohomology [10]. Their work inspired us to find the main result of this paper.

Our paper is organised as follows. In Section 2 we recall the basic properties of the algebras of $\mathfrak{g}$-endomorprhisms due to Kostant. In Section 3 we prove our main theorem on $Z(\mathfrak{g})$-bases for R_λ. In Section 4 we describe the bases for $R_{\lambda,\nu}$ and the Clifford analogue of our main theorem that is proved in Section 3.

2. Preliminaries on R_λ and $R_{\lambda,\nu}$

Fix a finite-dimensional simple $\mathfrak{g}$-module V_λ with highest weight λ. Let

$$\pi\colon U(\mathfrak{g}) \to \operatorname{End} V_\pi$$

be an arbitrary $\mathfrak{g}$-module having an infinitesimal character. In describing the infinitesimal characters of the tensor product $V_\lambda \otimes V_\pi$, Kostant [7] introduced the following algebras

$$R_\lambda = (\operatorname{End} V_\lambda \otimes U(\mathfrak{g}))^{\mathfrak{g}}$$

and

$$R_{\lambda,\pi} = (\operatorname{End} V_\lambda \otimes \pi[U(\mathfrak{g})])^{\mathfrak{g}}.$$

Kostant used the notation R and R_π for these two algebras [7]. Our notation indicates their dependence on λ. In particular, if π_ν is any finite-dimensional simple module with highest weight ν, then we use simpler notation $R_{\lambda,\nu}$ for R_{λ,π_ν}, namely

$$R_{\lambda,\nu} = (\operatorname{End} V_\lambda \otimes \operatorname{End} V_\nu)^{\mathfrak{g}} \cong \operatorname{End}_{\mathfrak{g}}(V_\lambda \otimes V_\nu).$$

Consider the map

$$\delta : U(\mathfrak{g}) \to U(\mathfrak{g}) \otimes U(\mathfrak{g})$$

defined by

$$\delta(x) = x \otimes 1 + 1 \otimes x \text{ for } x \in \mathfrak{g},$$

which extends to a homomorphism of associated algebras.

By composing with π_λ on the first factor, we have the map

$$\delta_\lambda : U(\mathfrak{g}) \to \operatorname{End} V_\lambda \otimes U(\mathfrak{g})$$

defined by

$$\delta_\lambda(x) = \pi_\lambda(x) \otimes 1 + 1 \otimes x \text{ for } x \in \mathfrak{g},$$

which extends to a homomorphism of associative algebras. Then R_λ is the commutant of $\delta(U(\mathfrak{g}))$ in $\operatorname{End} V_\lambda \otimes U(\mathfrak{g})$. For any $u \in Z(\mathfrak{g})$, $\delta(u)$ is in R_λ. Thus, $\delta(Z(\mathfrak{g}))$ is in the center of R_λ.

As shown in [6, Theorem 21] there is a $\mathfrak{g}$-submodule E of $U(\mathfrak{g})$ such that the multiplication

$$Z(\mathfrak{g}) \otimes E \to U(\mathfrak{g})$$

is a $\mathfrak{g}$-isomorphism. It follows that R_λ is a free $Z(\mathfrak{g})$-module.

Let $\triangle_\lambda = \{\mu_1, \cdots, \mu_k\}$ be the set of weights of V_λ and d_i be the multiplicity of μ_i. In other words, we have the weight space decomposition

$$V_\lambda|_{\mathfrak{h}} = \bigoplus_i \mathbb{C}_{\mu_i}^{\oplus d_i}.$$

Following Kostant we make the following definition.

DEFINITION 2.1. *We say that λ is totally subordinate to ν if the number of irreducible constituents in $V_\lambda \otimes V_\nu$ is equal to $d_\lambda := \dim V_\lambda$.*

PROPOSITION 2.2. *[7, Theorem 4.7] If λ is totally subordinate to ν, then there is an isomorphism of algebras*

$$R_{\lambda,\nu} \to \bigoplus_{i=1}^{k} \operatorname{Mat}_{d_i}(\mathbb{C}).$$

PROPOSITION 2.3. *[7, Theorem 4.8] R_λ is a free $Z(\mathfrak{g})$-module of rank r, where $r = \sum_{i=1}^{k} d_i^2$.*

PROPOSITION 2.4. *[7, Theorem 4.9] Suppose $u \in Z(\mathfrak{g})$ is not a constant. Then there exists a monic polynomial $P_{u,\lambda}(X)$ of degree k with coefficients in $Z(\mathfrak{g})$, such that $P_{u,\lambda}(X)$ is the minimal polynomial of $\delta_\lambda(u)$.*

REMARK 2.5. The minimal polynomial of $\delta_\lambda(u)$ can be obtained from u by using the Harish-Chandra isomorphism [7, (4.9.4)- (4.9.6)].

THEOREM 2.6. *The following statements are equivalent:*
(i) *R_λ is commutative.*
(ii) *V_λ has simple $\mathfrak{h}$-spectrum (every $d_i = 1$).*
(iii) *For any non-constant $u \in Z(\mathfrak{g})$, $1, \delta(u), \ldots, \delta(u)^{d_\lambda - 1}$ form a basis of R_λ over the fractional field $K(\mathfrak{g})$ of $Z(\mathfrak{g})$.*

PROOF. *(i)* $\Longrightarrow$ *(ii)*: Commutativity of R_λ imples that $R_{\lambda,\nu}$ is commutative for any ν. Take a ν so that λ is totally subordinate to ν. By Proposition 2.1 there is an isomorphism of algebras

$$R_{\lambda,\nu} \to \bigoplus_{i=1}^{k} \operatorname{Mat}_{d_i}(\mathbb{C}).$$

Thus, (ii) follows from (i).

$(ii) \implies (iii)$: It follows from Proposition 2.2 that $1, \delta(u), \ldots, \delta(u)^{k-1}$ are linearly independent over $Z(\mathfrak{g})$, and thus they form a basis of R_λ over the $K(\mathfrak{g})$.

$(iii) \implies (i)$ is obvious. □

REMARK 2.7. *The following is a complete list of irreducible representations of simple Lie algebras with simple $\mathfrak{h}$-spectrum. This list is well-known to experts. For instance, it appears in Howe's 1992 Schur Lecture Notes [2].*

$\mathfrak{g}$	λ the highest weight
$A_n (n \geq 1)$	$\omega_k, k = 1, \ldots, n$ $k\omega_1, k\omega_n, k = 1, 2, \ldots$
$B_n (n \geq 2)$	ω_1 ω_n (spin representation)
$C_n (n \geq 3)$	ω_1
C_3	ω_3
$D_n (n \geq 4)$	ω_1 ω_{n-1}, ω_n (spin representations)
G_2	ω_1 (dim = 7)
E_6	ω_1 (dim = 27) ω_6 (dim = 27)
E_7	ω_1 (dim = 56)

3. $Z(\mathfrak{g})$-Bases of R_λ

We see from Theorem 2.5 that any $\delta(u)$ ($u \in Z(\mathfrak{g})$ not a constant) generates R_λ over $K(\mathfrak{g})$. In this section we seek u so that $\delta(u)$ generates R_λ over $Z(\mathfrak{g})$. Naturally, it has to be the element of the smallest positive degree, namely the Casimir element

$$C = \sum_{i=1}^{m} x_i x_i^*.$$

We have

$$\delta_\lambda(C) = \pi_\lambda(C) \otimes 1 + 2M_\lambda(C) + 1 \otimes C, \tag{3.1}$$

where

$$M_\lambda(C) = \sum_{i=1}^{m} \pi_\lambda(x_i) \otimes x_i^*.$$

Clearly, as $Z(\mathfrak{g})$-module, R_λ is generated by powers of $\delta_\lambda(C)$ if and only if it is generated by powers of $M_\lambda(C)$.

To prove our main result Theorem 3.1 we first recall the concept of generalised exponents [6, Page 394] and a remarkable theorem of Kostant [6]. Let $I(\mathfrak{g}) = S(\mathfrak{g})^{\mathfrak{g}}$. We identify $I(\mathfrak{g})$ with the algebra $P(\mathfrak{g}^*)^{\mathfrak{g}}$ of $\mathfrak{g}$-invariant polynomials on $\mathfrak{g}^*$. Let $I^+(\mathfrak{g})$ be the augmentation ideal in $I(\mathfrak{g})$, namely the

ideal of polynomials vanishing at the origin. Denote by $J(\mathfrak{g})$ the ideal in $S(\mathfrak{g})$ generated by $I^+(\mathfrak{g})$. The space $H(\mathfrak{g})$ of harmonic polynomials on $\mathfrak{g}^*$ is defined as the orthogonal complement to $J(\mathfrak{g})$ in $S(\mathfrak{g})$. Kostant showed that there is an isomorphism of graded $\mathfrak{g}$-modules:

$$S(\mathfrak{g}) \cong I(\mathfrak{g}) \otimes H(\mathfrak{g}).$$

Moreover, each irreducible representation π_λ has finite multiplicity in $H(\mathfrak{g})$. More precisely, if $s = m_\lambda(0)$ is the multiplicity of the zero weight in V_λ, then there exist numbers $e_1(\lambda), \ldots, e_s(\lambda)$ (not necessarily distinct) such that π_λ occurs in the homogeneous components $H^{e_1(\lambda)}(\mathfrak{g}), \ldots, H^{e_s(\lambda)}(\mathfrak{g})$. The numbers $e_1(\lambda), \ldots, e_s(\lambda)$ are called the generalised exponents related to the representation π_λ. Since $H(\mathfrak{g})$ is a self-dual $\mathfrak{g}-$module, the generalised exponents are the same for λ and λ^*. For the adjoint representation of a simple Lie algebra $\mathfrak{g}$, the generalised exponents coincide with the exponents of $\mathfrak{g}$.

We list of the exponents of simple Lie algebra $\mathfrak{g}$. This list will be used in the proof of Proposition 3.3.

$\mathfrak{g}$	exponents
$A_n (n \geq 1)$	$1, 2, \ldots, n$
$B_n (n \geq 2)$	$1, 3, 5, \ldots, 2n-1$
$C_n (n \geq 3)$	$1, 3, 5, \ldots, 2n-1$
$D_n (n \geq 4)$	$1, 3, 5, \ldots, 2n-3, n-1$
E_6	$1, 4, 5, 7.8.11$
E_7	$1, 5, 7, 9, 11, 13, 17$
E_8	$1, 7, 11, 13, 17, 19, 23, 29$
F_4	$1, 5, 7, 11$
G_2	$1, 5$

Recall that a principal $\mathfrak{sl}_2$ in $\mathfrak{g}$ is a three-dimensional subalgebra spanned by a triple $\{X, H, Y\}$ in $\mathfrak{g}$ such that

$$[H, X] = 2X,\ [H, Y] = -2Y,\ [X, Y] = H$$

and the orbit of X under the adjoint group of $\mathfrak{g}$ is the principal nilpotent orbit. It turns out that there is one conjugacy class of principal $\mathfrak{sl}_2$'s for which the semisimple element H is conjugate to

$$2\rho^\vee = \sum_{\alpha \in \phi^+} \alpha^\vee,$$

where Φ^+ is a fixed system of positive roots of $\mathfrak{g}$ and $\alpha^\vee = \frac{2\alpha}{(\alpha,\alpha)}$ is the dual root in $\mathfrak{h}$.

Let $\Pi = \{\alpha_1, \cdots, \alpha_r\}$ be the set of simple roots. We choose the simple root vectors $X_1, \ldots, X_r$ and let $Y_1, \ldots, Y_r$ be the corresponding root vectors for the negatives of the simple roots normalized by the condition

$$[X_i, Y_i] = H_i := \alpha_i^\vee.$$

Since the difference of simple roots is never a root, we have $[X_i, Y_j] = 0$ for $i \neq j$. Set $c_i = \langle \omega_i, \rho^\vee \rangle$ where ω_i are the fundamental weights. Then $\rho^\vee = \sum c_i \alpha_i^\vee$,and

$$X = X_1 + \cdots + X_r,\ H = 2\rho^\vee = c_1 H_1 + \cdots + c_r H_r,\ Y = Y_1 + \cdots + Y_r$$

form a basis of a principal $\mathfrak{sl}_2$. The height of λ is defined by

$$\mathrm{ht}(\lambda) = \langle \lambda, \rho^\vee \rangle.$$

THEOREM 3.1. *The following statements are equivalent:*
(i) $1, \delta_\lambda(C), \ldots, \delta_\lambda(C)^{d_\lambda - 1}$ *form a basis of the* $Z(\mathfrak{g})$*-module* R_λ.
(ii) $1, M_\lambda(C), \ldots, M_\lambda(C)^{d_\lambda - 1}$ *form a basis of the* $Z(\mathfrak{g})$*-module* R_λ.
(iii) V_λ *is irreducible when restricted to a principal* $\mathfrak{sl}_2$ *in* $\mathfrak{g}$.

PROOF. Note that $\delta_\lambda(C) = |\lambda + \rho|^2 - |\rho|^2$ is a scalar. It follows from (3.1) that (i) and (ii) are equivalent. A necessary condition for R_λ having a basis generated by powers of one element is that R_λ is commutative. By Theorem 2.6, V_λ is multiplicity free. It follows that the rank of the free $Z(\mathfrak{g})$-module R_λ is $d_\lambda = \dim V_\lambda$. The condition (ii) is equivalent to that the generalised exponents of $\operatorname{End} V_\lambda$ are $0, 1, \ldots, d_\lambda - 1$. Note that the largest possible exponent of $\operatorname{End} V_\lambda$ is $2\mathrm{ht}(\lambda)$. Here $\mathrm{ht}(\lambda)$ is the height of λ, which is equal to the highest weight of the principal $\mathfrak{sl}_2$. Thus, condition (ii) is equivalent to that $2\mathrm{ht}(\lambda) = d_\lambda - 1$, which is equivalent to that V_λ is an irreducible module for the principal $\mathfrak{sl}_2$. □

We note that in Theorem 3.1 the set of integers $\{1, \ldots, d_\lambda\}$ that appeared as the powers of $\delta_\lambda(C)$ or $M_\lambda(C)$ is exactly the union of the sets of generalised exponents of all irreducible constituents V_{γ_i}'s in

$$\operatorname{End} V_\lambda \cong V_\lambda^* \otimes V_\lambda = \bigoplus V_{\gamma_i}.$$

Consequently, in Proposition 3.3 below the integers (i for type A_n and $2i - 1$ for others) appeared as the powers of $\delta_{\omega_1}(C)$ or $M_{\omega_1}(C)$ exactly the exponents for the corresponding simple Lie algebra $\mathfrak{g}$.

PROPOSITION 3.2. *Here is the list of simple* $\mathfrak{g}$*-modules that are irreducible when restricted to a principal* $\mathfrak{sl}_2$ *in* $\mathfrak{g}$.

$\mathfrak{g}$	λ *the highest weight*
A_n	ω_1, ω_n
A_1	$k\omega_1, k = 1, 2, \ldots$
B_n	ω_1
B_2	ω_2
C_n	ω_1
G_2	ω_1 $(dim = 7)$

PROOF. By Theorem 3.1, R_λ is commutative. It follows from Theorem 2.6 that V_λ is of simple $\mathfrak{h}$-spectrum. Then it is readily checked that the list in Remark 2.7 implies the conclusion. □

Now we consider a special case when $\lambda = \omega_1$, the fundamental weight corresponding to the natural representation for a classical simple Lie algebra or the 7-dimensional irreducible representation for G_2. Denote by d the dimension of V_{ω_1}. Then

$$d = \begin{cases} n, & \mathfrak{g} = \mathfrak{sl}(n,\mathbb{C}) \text{ or } \mathfrak{so}(n,\mathbb{C}) \\ 2n, & \mathfrak{g} = \mathfrak{sp}(2n,\mathbb{C}) \\ 7, & \mathfrak{g} \text{ is of type } G_2. \end{cases}$$

By the natural embedding of

$$\mathfrak{g} \hookrightarrow \mathrm{Mat}_d(\mathbb{C}) \cong \mathrm{End}V_{\omega_1},$$

we have the embedding

$$A(\mathfrak{g}) = \mathrm{Hom}_{\mathfrak{g}}(\mathfrak{g}, U(\mathfrak{g})) \hookrightarrow (\mathrm{Mat}_d(\mathbb{C}) \otimes U(\mathfrak{g}))^{\mathfrak{g}}.$$

As a consequence, we have the following proposition. Given a matrix M, let M^T denote the transpose of M.

PROPOSITION 3.3. *One has following $Z(\mathfrak{g})$-bases for $A(\mathfrak{g})$:*
A_n: $M_{\omega_1}(C)^i - \frac{tr M_{\omega_1}(C)^i}{n+1} I_{n+1}$ with $1 \le i \le n$;
B_n: $M_{\omega_1}(C)^{2i-1} - (M_{\omega_1}(C)^{2i-1})^T$ with $1 \le i \le n$;
C_n: $M_{\omega_1}(C)^{2i-1} - (M_{\omega_1}(C)^{2i-1})^T$ with $1 \le i \le n$;
G_2: $M_{\omega_1}(C)^{2i-1} - (M_{\omega_1}(C)^{2i-1})^T$ with $i = 1, 3$.

PROOF. This is verified case by case. First, we consider the case $\mathfrak{g}$ is of type A_n. Then we have $\mathrm{End}\, V_{\omega_1} \cong \mathfrak{g} \oplus \mathbb{C}$, and clearly a basis is given as above.

In the second case when $\mathfrak{g}$ is either of type B_n or of type C_n, we have the following decomposition into irreducible representations

$$\mathrm{End}\, V_{\omega_1} \cong \mathrm{Sym}^2 V_{\omega_1} \oplus \wedge^2 V_{\omega_1} \cong (\mathbb{C} \oplus V_{2\omega_1}) \oplus \mathfrak{g}.$$

Here the adjoint representation $\mathfrak{g}$ has highest weight ω_2 and is contained in $\wedge^2 V_{\omega_1}$. Then we readily verify by checking the exponents that the corresponding expressions of $M_{\omega_1}(C)$ with appropriate powers are in $(\mathfrak{g} \otimes U(\mathfrak{g}))^{\mathfrak{g}}$ inside $R_{\omega_1} = (\mathrm{End}\, V_{\omega_1} \otimes U(\mathfrak{g}))^{\mathfrak{g}}$.

In the last case when $\mathfrak{g}$ is of type G_2, we have

$$\mathrm{End}\, V_{\omega_1} \cong \mathrm{Sym}^2 V_{\omega_1} \oplus \wedge^2 V_{\omega_1} \cong (\mathbb{C} \oplus V_{2\omega_2}) \oplus (V_{\omega_1} \oplus \mathfrak{g}).$$

Here the adjoint representation $\mathfrak{g}$ has highest weight ω_2 and is contained in $\wedge^2 V_{\omega_1}$. Again we readily verify by checking the exponents that the corresponding expressions of $M_{\omega_1}(C)$ with appropriate powers are in $(\mathfrak{g} \otimes U(\mathfrak{g}))^{\mathfrak{g}}$ inside $R_{\omega_1} = (\mathrm{End}\, V_{\omega_1} \otimes U(\mathfrak{g}))^{\mathfrak{g}}$. □

COROLLARY 3.4. *It follows from Theorem 3.1 that one gets the following $Z(\mathfrak{g})$-bases for $A(\mathfrak{g})$:*

A_n: $\delta_{\omega_1}(C)^i$ *with* $1 \le i \le n$;
B_n: $\delta_{\omega_1}(C)^{2i-1} - (\delta_{\omega_1}(C)^{2i-1})^T$ *with* $1 \le i \le n$;
C_n: $\delta_{\omega_1}(C)^{2i-1} - (\delta_{\omega_1}(C)^{2i-1})^T$ *with* $1 \le i \le n$;
G_2: $\delta_{\omega_1}(C)^{2i-1} - (\delta_{\omega_1}(C)^{2i-1})^T$ *with* $i = 1, 3$.

4. BASES FOR $R_{\lambda,\nu}$

Recall that the map

$$\delta_{\lambda,\nu} : U(\mathfrak{g}) \to \operatorname{End} V_\lambda \otimes \operatorname{End} V_\nu$$

is defined by

$$\delta_{\lambda,\nu}(x) = \pi_\lambda(x) \otimes 1 + 1 \otimes \pi_\nu(x) \text{ for } x \in \mathfrak{g},$$

which extends to a homomorphism of associative algebras. We set

$$M_{\lambda,\nu}(C) = \sum_{i=1}^{m} \pi_\lambda(x_i) \otimes \pi_\nu(x_i^*).$$

Then

$$\delta_{\lambda,\nu}(C) = \pi_\lambda(C) \otimes 1 + 2M_{\lambda,\mu}(C) + 1 \otimes \pi_\nu(C). \tag{4.1}$$

We also recall from Section 2 that $\triangle_\lambda = \{\mu_1, \cdots, \mu_k\}$ is the set of weights of V_λ and d_i the multiplicity of μ_i. If λ is totally subordinate to ν, then we have an isomorphism

$$R_{\lambda,\nu} \to \bigoplus_{i=1}^{k} \operatorname{Mat}_{d_i}(\mathbb{C}).$$

It follows from Theorem 2.6 that we have the following proposition.

PROPOSITION 4.1. *Assume that V_λ has simple $\mathfrak{h}$-spectrum and λ is totally subordinate to ν. Then the following statements are equivalent:*

(i) $1, \delta_{\lambda,\nu}(C), \ldots, \delta_{\lambda,\nu}(C)^{d_\lambda - 1}$ *form a basis of* $R_{\lambda,\nu}$.
(ii) $1, M_{\lambda,\nu(}C), \ldots, M_{\lambda,\nu}(C)^{d_\lambda - 1}$ *form a basis of* $R_{\lambda,\nu}$.
(iii) $\delta_{\lambda,\nu}(C)$ *acts on the distinct irreducible summands of* $V_\lambda \otimes V_\nu$ *with distinct eigenvalues.*

PROOF. It follows from (4.1) that (i) and (ii) are equivalent. Clearly, the equivalence (iii) and (i) is due to the expression of the determinant for the corresponding Vandermonde matrix. □

Now we deal with the minuscule representations V_λ. Recall that V_λ is said to be minuscule if $\langle \lambda, \alpha \rangle = 0, -1, 1$ for all roots α. Here is the list of the minuscule representations (cf. [3, Page 72, Exercise 13]).

$\mathfrak{g}$	λ the highest weight
$A_n (n \geq 1)$	$\omega_k, k = 1, \ldots, n$
$B_n (n \geq 2)$	ω_n (spin representation)
$C_n (n \geq 3)$	ω_1
$D_n (n \geq 4)$	ω_1 ω_{n-1}, ω_n (spin representations)
E_6	ω_1 (dim = 27) ω_6 (dim = 27)
E_7	ω_1 (dim = 56)

PROPOSITION 4.2. *Suppose that λ is minuscule. Assume that $n(\nu) = r$ (= rank $\mathfrak{g}$). Then λ is totally subordinate to ν. As a consequence of Proposition 4.1, one has the following equivalent statements:*

(i) $1, \delta_{\lambda,\nu}(C), \ldots, \delta_{\lambda,\nu}(C)^{d_\lambda - 1}$ *form a basis of* $R_{\lambda,\nu}$.

(ii) $1, M_{\lambda,\nu(}C), \ldots, M_{\lambda,\nu}(C)^{d_\lambda - 1}$ *form a basis of* $R_{\lambda,\nu}$.

(iii) $\delta_{\lambda,\nu}(C)$ *acts on the distinct irreducible summands of* $V_\lambda \otimes V_\nu$ *with distinct eigenvalues.*

PROOF. Let α be a simple root of $\mathfrak{g}$ with respect to the fixed system of positive roots. Then $|\langle \lambda, \alpha \rangle| \leq 1$, since λ is minuscule, and $|\langle \mu, \alpha \rangle| \leq 1$ for all weights μ of V_λ. On the other hand, we have $\langle \nu, \alpha \rangle \geq 1$ due to $n(\nu) = r$. Thus, $V_\lambda \otimes V_\nu$ decomposes into d_λ (non-isomorphic) irreducible representations with highest weights $\nu + \mu_i$, where μ_i are the weights of V_λ. Therefore, λ is totally subordinate to ν. The rest of the conclusions follow from Proposition 4.1. □

By a theorem of Kostant [8, Theorem D], the Clifford algebra $C(\mathfrak{g})$ with respect to the Killing form of $\mathfrak{g}$ decomposes into the tensor product

$$C(\mathfrak{g}) = J \otimes E,$$

where $J = C(\mathfrak{g})^{\mathfrak{g}}$ and $E = \operatorname{End} V_\rho$. We set the Clifford algebra analogue R_λ^C to be the invariant endomorphism algebra

$$R_\lambda^C : = \operatorname{Hom}_{\mathfrak{g}}(\operatorname{End} V_\lambda, C(\mathfrak{g})).$$

Then R_λ^C is a free J-module of rank equal to $\dim R_{\lambda,\rho}$. Note that

$$\rho = \omega_1 + \cdots + \omega_r.$$

The following theorem is an immediate consequence of Proposition 4.2.

THEOREM 4.3. *Assume that λ is minuscule. Then R_λ^C is a free J-module of rank d_λ. Moreover, the following statement are equivalent:*

(i) $1, \delta_{\lambda,\rho}(C), \ldots, \delta_{\lambda,\rho}(C)^{d_\lambda - 1}$ *form a J-basis of* R_λ^C.

(ii) $1, M_{\lambda,\rho}(C), \ldots, M_{\lambda,\rho}(C)^{d_\lambda - 1}$ *form a J-basis of* R_λ^C.

(iii) $\delta_{\lambda,\rho}(C)$ *acts on the distinct irreducible summands of* $V_\lambda \otimes V_\rho$ *with distinct eigenvalues.*

In the remaining part of this section, we deal with the general situation for any λ, ν. Clearly, if $V_\lambda \otimes V_\nu$ decomposes into a direct sum of d non-isomorphic irreducible representations

$$V_\lambda \otimes V_\nu = \bigoplus_{i=1}^{d} V_{\gamma_i},$$

then $R_{\lambda,\nu}$ is a commutative $\mathbb{C}$-algebra and $\dim R_{\lambda,\nu} = d$.

THEOREM 4.4. *Let d be a positive integer. Then the following statements are equivalent:*

(i) $1, \delta_{\lambda,\nu}(C), \ldots, \delta_{\lambda,\nu}(C)^{d-1}$ *form a basis of* $R_{\lambda,\nu}$.

(ii) $1, M_{\lambda,\nu}(C), \ldots, M_{\lambda,\nu}(C)^{d-1}$ *form a basis of* $R_{\lambda,\nu}$.

(iii) $V_\lambda \otimes V_\nu = \bigoplus_{i=1}^{d} V_{\gamma_i}$ *decomposes into a direct sum of d non-isomorphic simple $\mathfrak{g}$-modules with distinct $\delta_{\lambda,\nu}(C)$-eigenvalues.*

PROOF. It follows from (4.1) that (i) and (ii) are equivalent. We now show that (i) and (iii) are equivalent. Either (i) or (iii) implies that $R_{\lambda,\nu}$ is commutative which is equivalent to $V_\lambda \otimes V_\nu$ decomposing into a direct sum of d distinct simple $\mathfrak{g}$-modules. Under the assumption that $V_\lambda \otimes V_\nu$ decomposes into a direct sum of d non-isomorphic simple $\mathfrak{g}$-modules

$$V_\lambda \otimes V_\nu = \bigoplus_{i=1}^{d} V_{\gamma_i},$$

we have $R_{\lambda,\nu}$ is commutative algebra with $\dim R_{\lambda,\nu} \leq d$. Thus, Condition (i) holds (namely $1, \delta_{\lambda,\nu}(C), \ldots, \delta_{\lambda,\nu}(C)^{d-1}$ form a basis of $R_{\lambda,\nu}$) if and only that $1, \delta_{\lambda,\nu}(C), \ldots, \delta_{\lambda,\nu}(C)^{d-1}$ are linear independent. This is in turn equivalent to that the determinant of the following Vandermonde matrix is nonzero:

$$\begin{pmatrix} 1 & (|\gamma_1+\rho|^2-|\rho|^2) & \cdots & (|\gamma_1+\rho|^2-|\rho|^2))^{d-1} \\ 1 & (|\gamma_2+\rho|^2-|\rho|^2) & \cdots & (|\gamma_2+\rho|^2-|\rho|^2)^{d-1} \\ \vdots & \vdots & \vdots & \vdots \\ 1 & (|\gamma_d+\rho|^2-|\rho|^2) & \cdots & (|\gamma_d+\rho|^2-|\rho|^2)^{d-1} \end{pmatrix},$$

which is equivalent to the condition that $\delta_{\lambda,\nu}(C)$-eigenvalues $|\gamma_2+\rho|^2-|\rho|^2$ on the irreducible constituents V_{γ_i} are distinct. □

REMARK 4.5. Suppose that $V_\lambda \otimes V_\nu = \bigoplus_{i=1}^{d} V_{\gamma_i}$ decomposes into a direct sum of d non-isomorphic simple $\mathfrak{g}$-modules. Then the irreducible constituents V_{γ_i} have distinct infinitesimal characters $\chi_{\gamma_i+\rho}$. For almost all $u \in Z(\mathfrak{g})$, one has

$$\chi_{\gamma_i+\rho}(u) \neq \chi_{\gamma_j+\rho}(u), \text{ for } i \neq j. \tag{4.2}$$

Such $u \in Z(\mathfrak{g})$ satisfying the above Condition (4.2) are called generic with respect to λ and ν. It follows from Theorem 4.4 that $1, \delta_{\lambda,\nu}(u), \ldots, \delta_{\lambda,\nu}(u)^{d-1}$ form a basis of $R_{\lambda,\nu}$ provided $u \in Z(\mathfrak{g})$ is generic with respect to λ and ν.

References

[1] B. C. Hall, Lie Groups, Lie Algebras and Representations, 2nd edition, Graduate Texts in Mathematics **222**, Springer, Cham, 2015.

[2] R. Howe, *Perspectives on invariant theory: Schur duality, multiplicity-free actions and beyond,* The Schur lectures (1992) (Tel Aviv), Bar-Ilan University, Ramat Gan, 1995, pp. 1–182.

[3] J. E. Humphreys, Introduction to Lie Algebras and Representation Theory, Graduate Texts in Mathematics **9**, Springer-Verlag, New York-Berlin, 1972.

[4] A. A. Kirillov, *Family algebras*, Electron. Res. Announc. Amer. Math. Soc. **6** (2000), 7–20.

[5] A. A. Kirillov, *Introduction to family algebras*, Mosc. Math. J. **1** (2001), 49–63.

[6] B. Kostant, *Lie group representations on polynomial rings*, Amer. J. Math. **85** (1963), 327–404.

[7] B. Kostant, *On the tensor product of a finite and an infinite dimensional representation*, J. Functional Analysis **20** (1975), 257–285.

[8] B. Kostant, *Clifford algebra analogue of the Hopf - Koszul - Samelson Theorem, the ρ-decomposition $C(\mathfrak{g}) = End V_\rho \otimes C(P)$, and the $\mathfrak{g}$-Module Structure of $\wedge\mathfrak{g}$*, Adv. Math. **125** (1997), 275–350.

[9] S. Okubo, H. C. Myung, *Adjoint operators in Lie algebras and the classification of simple flexible Lie-admissible algebras*, Trans. Amer. Math. Soc. **264** (1981), 459–472.

[10] D. Panyushev, *Weight multiplicity free representations, $\mathfrak{g}$-endomorphism algebras, and Dynkin polynomials*, J. London. Math. Soc. (2) **69** (2004), 273–290.

[11] N. Rozhkovskaya, *Commutativity of quantum family algebras*, Lett. Math. Phys. **63** (2003), 87–103.

O bazama $\mathfrak{g}$-invarijantnih algebri endmorfizama

Jing-Song Huang i Yufeng Zhao

Sažetak. Neka je $\mathfrak{g}$ kompleksna prosta Liejeva algebra. Neka je $Z(\mathfrak{g})$ centar univerzalne omotačke algebre $U(\mathfrak{g})$. Neka je V_λ konačno–dimenzionalni ireducibilan $\mathfrak{g}$-modul najveće visine λ. Glavni rezultat ovog rada je kriterij postojanja za $Z(\mathfrak{g})$–baze $\mathfrak{g}$-invarijantnih algebri endmorfizama $R_\lambda =: \mathrm{Hom}_{\mathfrak{g}}(\mathrm{End}\, V_\lambda, U(\mathfrak{g}))$. Nadalje, dokazujemo Clifford algebra analog tj. kriterij egzistencije $C(\mathfrak{g})^{\mathfrak{g}}$–baze za $R^C_\lambda =: \mathrm{Hom}_{\mathfrak{g}}(\mathrm{End}\, V_\lambda, C(\mathfrak{g}))$. Osim toga, opisujemo kriterij egzistencije baza generiranih potencijama Casimirovog elementa za $R_{\lambda,\nu} =: \mathrm{Hom}_{\mathfrak{g}}(\mathrm{End}\, V_\lambda, \mathrm{End}\, V_\nu)$.

Jing-Song Huang
Mathematics Research Center, School of Science and Engineering
The Chinese University of Hong Kong, Shenzhen, China
E-mail: huangjingsong@cuhk.edu.cn

Yufeng Zhao
Department of Mathematics, Peking University, Beijing, China
E-mail: Zhaoyufeng@math.pku.edu.cn

Received: 4.6.2023.
Revised: 14.8.2023.
Accepted: 19.9.2023.

RAD HAZU. MATEMATIČKE ZNANOSTI
Vol. 28 = 558 (2024): 353-403
DOI: https://doi.org/10.21857/moxpjhzvwm

SÉRIES DISCRÈTES DES ESPACES SYMÉTRIQUES ET PAQUETS D'ARTHUR

Colette Moeglin and David Renard

Pour Marko, avec toute notre amitié

Résumé. On vérifie certaines conjectures de Sakellaridis et Venkatesh donnant une description du spectre discret d'une variété sphérique $\mathcal{X} = G/H$ dans le formalisme d'Arthur-Langlands lorsque G est un groupe classique réel et $\mathcal{X}$ est un espace symétrique. On détermine ensuite explicitement les membres des paquets d'Arthur concernés contribuant au spectre discret, ce qui fait apparaître des résultats de multiplicité un.

Abstract. We check Sakellaridis-Venkatesh conjectures giving a description of the discrete spectrum of a spherical variety $\mathcal{X} = G/H$ in the Langlands-Arthur formalism when G is a classical real group and $\mathcal{X}$ is a symmetric space. Then, we compute explicitly the representations in the relevant Arthur packets which appear in the discrete spectrum, and we establish some multiplicity one results.

1. Introduction

Le but de cet article est de vérifier certaines conjectures de Sakellaridis et Venkatesh énoncées dans [SV17]. Ces conjectures proposent une description du spectre discret d'une variété sphérique $\mathcal{X}$ définie sur un corps local en termes de paramètres d'Arthur-Langlands. En particulier, ils introduisent la notion de L-groupe ${}^L G_{\mathcal{X}}$ associé à $\mathcal{X}$, dont la construction est poursuivie dans [KS17].

Le cadre de notre étude est beaucoup plus restreint que celui de *op. cit.*: les variétés sphériques que nous considérons sont des espaces symétriques $\mathcal{X} = G/H$, où G est le groupe des points réels d'un groupe algébrique connexe réductif $\mathbf{G}$ défini sur $\mathbb{R}$, où $\mathbf{H} = \mathbf{G}^\sigma$ est le groupe des points fixes d'une involution σ de $\mathbf{G}$ définie sur $\mathbb{R}$, et H est un sous-groupe de $\mathbf{H}(\mathbb{R})$ contenant la composante neutre de celui-ci au sens des groupes de Lie, $\mathbf{H}(\mathbb{R})_e$. En général, nous prendrons $H = \mathbf{H}(\mathbb{R})$, mais à ce sujet, remarquons que si les conjectures sont valides pour un $\mathcal{X} = G/H$ avec H soumis à $\mathbf{H}(\mathbb{R})_e \subset H \subset \mathbf{H}(\mathbb{R})$, elles

2020 *Mathematics Subject Classification.* 22E50, 11F67.
Key words and phrases. Discrete spectrum, symmetric spaces, Arthur parameters.

seront valides pour $\mathcal{X} = G/H'$ avec $H \subset H' \subset \mathbf{H}(\mathbb{R})$, et dans certains cas, nous démontrons les conjectures pour un groupe H strictement plus petit que $\mathbf{H}(\mathbb{R})$. Remarquons aussi que les conjectures doivent être reformulées pour des groupes H trop petits. Ce phénomène est à mettre en relation avec une extension possible de l'énoncé des conjectures à une situation tordue par un caractère unitaire χ de H/H_e sur laquelle nous reviendrons ci-dessous. De plus, nous supposons que G est un groupe général linéaire, un groupe unitaire, un groupe symplectique ou bien un groupe spécial orthogonal (nous dirons simplement que G est un groupe classique).

On note $L^2_d(\mathcal{X})$ la somme des sous-représentations (au sens des $(\mathfrak{g}, K)$-modules) irréductibles de $L^2(\mathcal{X})$ et une telle sous-représentation est appelée dans la suite *série discrète de* $\mathcal{X}$. On suppose donc que ce spectre discret est non trivial, et l'on veut caractériser les séries discrètes de $\mathcal{X}$ du point de vue des L-groupes et des paramètres d'Arthur. On adopte les notations habituelles pour les L-groupes de Langlands : $W_{\mathbb{R}}$ est le groupe de Weil de $\mathbb{R}$, $G^\vee$ est le groupe complexe dual de $\mathbf{G}(\mathbb{C})$ et ${}^L G$ est un certain produit semi-direct $G^\vee \ltimes W_{\mathbb{R}}$. Il s'agit tout d'abord d'attacher à l'espace symétrique $\mathcal{X}$ un L-groupe ${}^L G_{\mathcal{X}}$ et un morphisme

$$\varphi_{\mathcal{X}} : {}^L G_{\mathcal{X}} \times \mathbf{SL}(2, \mathbb{C}) \longrightarrow {}^L G. \tag{1.1}$$

La conjecture affirme que si π est une série discrète de $\mathcal{X}$, alors il existe un paramètre de Langlands discret $\phi_\pi : W_{\mathbb{R}} \longrightarrow {}^L G_{\mathcal{X}}$, tel que π appartienne au paquet d'Arthur de paramètre $\psi_\pi = \varphi_{\mathcal{X}} \circ \tilde{\phi}_\pi : W_{\mathbb{R}} \times \mathbf{SL}(2, \mathbb{C}) \longrightarrow {}^L G$, où ϕ_π a été étendu en un morphisme

$$\tilde{\phi}_\pi : W_{\mathbb{R}} \times \mathbf{SL}(2, \mathbb{C}) \to {}^L G_{\mathcal{X}} \times \mathbf{SL}(2, \mathbb{C})$$

par l'identité sur le facteur $\mathbf{SL}(2, \mathbb{C})$. Résumons ceci par le diagramme commutatif :

$$\begin{array}{ccc} W_{\mathbb{R}} \times \mathbf{SL}(2,\mathbb{C}) & \xrightarrow{\tilde{\phi}_\pi} & {}^L G_{\mathcal{X}} \times \mathbf{SL}(2,\mathbb{C}) \\ & \searrow^{\psi_\pi} & \downarrow{\scriptstyle \varphi_{\mathcal{X}}} \\ & & {}^L G \end{array} \tag{1.2}$$

On vérifie donc que cet énoncé est vrai dans le cadre indiqué (espaces symétriques des groupes classiques réels). Une bonne partie de la construction du L-groupe ${}^L G_{\mathcal{X}}$ et du morphisme $\varphi_{\mathcal{X}}$ est déjà effectuée dans [SV17] et [KS17]. En ce qui concerne ${}^L G_{\mathcal{X}}$, Knop et Schalke déterminent sa composante neutre, et dans tous les cas, sauf un sur lequel on reviendra ci-dessous, nous trouvons que ${}^L G_{\mathcal{X}}$ est bien un L-groupe ayant cette composante neutre. Il est alors déterminé par le fait supplémentaire que c'est le L-groupe d'un groupe quasi-déployé ayant de la série discrète (ou ce qui revient au même, sur les réels, d'un groupe compact). Dans le cas restant (le cas 3 avec n impair dans la liste des cas donnés étudiés dans l'article, voir Table 1), on peut soit garder

la composante neutre de Knop et Schalke (un groupe symplectique), mais il faut alors prendre pour ${}^L G_{\mathcal{X}}$ un produit semi-direct avec $W_{\mathbb{R}}$ qui n'est pas un L-groupe (mais pas loin, c'est un «E-group » au sens de [ABV92]), soit changer de L-groupe et prendre à la place celui d'un groupe orthogonal pair. Concernant le morphisme $\varphi_{\mathcal{X}}$, ce qui est déjà prévu par Knop et Schalke est sa restriction $\eta_{\mathcal{X}}$ à $\mathbf{SL}(2,\mathbb{C})$. Nous donnons dans l'article la forme explicite de $\varphi_{\mathcal{X}}$ dans chaque cas.

Nous avons mentionné ci-dessus la possibilité d'étendre l'énoncé des conjectures de Sakellaridis et Venkatesh à un contexte «tordu » par un caractère unitaire χ du groupe H trivial sur H_e, où l'on remplace $L^2_d(\mathcal{X})$ par $L^2_d(\mathcal{X})_\chi$, l'espace des sections de carré intégrable du fibré en droite défini par χ sur $\mathcal{X}$. Il s'agit alors d'introduire un L-groupe associé ${}^L G_{\mathcal{X},\chi}$, le reste des conjectures s'énonçant de la même façon, résumée dans le diagramme ci-dessus. Nous ne démontrons rien dans le cas où χ est non trivial, nous espérons y revenir ultérieurement, mais nous faisons ça et là quelques remarques sur ce que nous pensons être vrai. Cela éclaire parfois les résultats obtenus dans le cas où χ est trivial, en les rendant plus naturels lorsqu'on considère ce contexte généralisé.

Donnons maintenant un aperçu du contenu de l'article. Dans la section 2, nous rappelons les résultats de Oshima-Matsuki, Flensted-Jensen, Schlichtkrull et Vogan concernant les séries discrètes d'un espace symétrique réel $\mathcal{X} = G/H$. En particulier le théorème 2.1 donne un critère sur le rang pour que $\mathcal{X}$ admette un spectre discret non trivial. A l'aide des tables [Wik] et [KS17], Table 3, nous établissons alors la liste des espaces symétriques $\mathcal{X} = G/H$ avec G classique ayant un spectre discret. Cette liste, qui comporte treize cas, est la suivante:

1. $\mathbf{GL}(n,\mathbb{R})/\mathbf{GL}(p,\mathbb{R}) \times \mathbf{GL}(n-p,\mathbb{R})$, $2p \leq n$,
2. $\mathbf{U}(p,q)/\mathbf{O}(p,q)$,
3. $\mathbf{U}(p,q)/\mathbf{U}(r,s) \times \mathbf{U}(r',s')$, $r+r' = p$, $s+s' = q$, $r \leq r'$, $s \leq s'$,
4. $\mathbf{U}(n,n)/\mathbf{GL}(n,\mathbb{C})$,
5. $\mathbf{U}(2p,2q)/\mathbf{Sp}(p,q)$,
6. $\mathbf{U}(n,n)/\mathbf{Sp}(2n,\mathbb{R})$,
7. $\mathbf{SO}(p,q)/\mathbf{SO}(r,s) \times \mathbf{SO}(r',s')$, $p+q = 2n+1$, $r+r' = p$, $s+s' = q$, $r \leq r'$, $s \leq s'$,
8. $\mathbf{SO}(p,q)/\mathbf{SO}(r,s) \times \mathbf{SO}(r',s')$, $p+q = 2n$, $r+r' = p$, $s+s' = q$, $r \leq r'$, $s \leq s'$,
9. $\mathbf{SO}(2p,2q)/\mathbf{U}(p,q)$, $(p-1)(q-1) \neq 0 \mod 2$.
10. $\mathbf{SO}(n,n)/\mathbf{GL}(n,\mathbb{R})$,
11. $\mathbf{Sp}(2n,\mathbb{R})/\mathbf{Sp}(2p,\mathbb{R}) \times \mathbf{Sp}(2(n-p),\mathbb{R})$, $2p \leq n$,
12. $\mathbf{Sp}(4n,\mathbb{R})/\mathbf{Sp}(2n,\mathbb{C})$,
13. $\mathbf{Sp}(2n,\mathbb{R})/\mathbf{GL}(n,\mathbb{R})$.

Notre point de départ est une caractérisation précise des séries discrètes π de $\mathcal{X}$. Dans la littérature disponible, les résultats sont énoncés avec comme

hypothèses G semi-simple et connexe, H connexe, et sont rappelés dans le théorème 2.2. D'après [Vog88], les séries discrètes de $\mathcal{X}$ se réalisent comme modules de Vogan-Zuckerman $\pi = A_{\mathfrak{q}}(\pi_L)$, cohomologiquement induits à partir d'un triplet $(\mathfrak{q}, L, \pi_L)$, où L est le centralisateur dans G d'un sous-espace de Cartan compact $\mathfrak{t}_0$ de l'espace symétrique $\mathcal{X}$ (c'est un c-Levi de G, dans la terminologie de Shelstad), $\mathfrak{q}$ est une sous-algèbre parabolique θ-stable de $\mathfrak{g} = \mathrm{Lie}(\mathbf{G})$, et π_L est un caractère unitaire de L dans le fair range relativement à $\mathfrak{q}$. D'autre part, K étant un sous-groupe compact maximal de G donné par une involution de Cartan θ commutant avec σ, le K-type minimal de π contient génériquement des invariants non triviaux sous le groupe $K \cap H$. En général on obtient les π restants par les foncteurs de translation de Zuckerman, c'est-à-dire par continuation cohérente. On traduit la condition sur le K-type minimal en la condition uniforme (*iiib*) de la proposition 2.5 portant sur π_L. On étend ensuite ces énoncés aux espaces symétriques de notre liste, pour lesquels G n'est pas forcément semi-simple et connexe et H n'est pas forcément connexe. Pour cela, on emploie certaines techniques usuelles et générales, mais pour que l'article reste d'une longueur raisonnable, on utilise aussi des arguments au cas par cas. Par exemple, les groupes G de notre liste peuvent être non connexes, mais d'une non connexité raisonnable, ce qui rend les arguments plus faciles.

Cette réalisation des séries discrètes de $\mathcal{X}$ en termes d'induction cohomologique permet, en utilisant nos travaux antérieurs (*cf.* [MR20], [MR19]) sur les paquets d'Arthur des groupes classiques réels, de fournir pour chaque série discrète π de $\mathcal{X}$ un paramètre d'Arthur explicite ψ_π tel que π soit dans le paquet d'Arthur correspondant $\Pi(G, \psi_\pi)$. On rappelle dans la section 3.2 la forme explicite des paramètres d'Arthur pour les groupes classiques réels ([MR20]), puis dans la section 3.3, on donne pour chaque espace de la liste, le paramètre ψ_π contenant la série discrète π. Pour pouvoir faire ceci, on a besoin de déterminer le groupe L, centralisateur dans G du sous-espace de Cartan $\mathfrak{t}_0$. Ce calcul un peu laborieux est relégué à la fin de l'article (section 9), les résultats étant reportés dans la Table 2. Notons que les calculs explicites en rang un sont cruciaux, car on s'y ramène par un argument général.

Par définition, le groupe $\mathbf{L}$, centralisateur dans $\mathbf{G}$ du sous-espace de Cartan $\mathfrak{t}_0$, est conjugué à un sous-groupe de Levi appelé $\mathbf{L}(\mathcal{X})$ dans [SV17]. Le groupe dual de ce groupe est un sous-groupe de Levi $\mathbf{L}_{\mathcal{X}}^\vee$ de $G^\vee$, qui est déterminé dans [KS17], voir Table 1. Un argument général nous dit que la restriction de ψ_π à $\mathbf{SL}(2, \mathbb{C})$ est le morphisme de Jabcobson-Morosov associé à l'orbite unipotente principale du sous-groupe de Levi $\mathbf{L}_{\mathcal{X}}^\vee$ de $G^\vee$. Ainsi on peut associer à l'espace symétrique $\mathcal{X}$ un morphisme $\eta_{\mathcal{X}} : \mathbf{SL}(2, \mathbb{C}) \to {}^L G$ (ou plutôt une classe de conjugaison de tel morphismes, ou encore de manière équivalente une orbite unipotente) de sorte que nos paramètres ψ_π aient tous ce morphisme pour restriction à $\mathbf{SL}(2, \mathbb{C})$ (à conjugaison près). Cette construction coïncide avec celle prévue par Sakellaridis et Venkatesh et explicitée

dans [KS17], c'est-à-dire que la restriction à $\mathbf{SL}(2,\mathbb{C})$ du morphisme conjectural $\varphi_{\mathcal{X}}$ est bien $\eta_{\mathcal{X}}$. Ainsi, pour ce qui est de la restriction à $\mathbf{SL}(2,\mathbb{C})$ des morphismes ψ_π et $\varphi_{\mathcal{X}}$, la conjecture est établie. Les détails sont donnés dans la section 4.

Une conséquence directe de ceci est que la restriction des paramètres ψ_π à $W_{\mathbb{R}}$ se factorise par le commutant dans ${}^L G$ de l'image de $\mathbf{SL}(2,\mathbb{C})$, que nous notons $\mathcal{G}$, en un morphisme tempéré. Reprenons le diagramme (1.2) et simplifions-le en tenant compte de la partie démontrée sur le facteur $\mathbf{SL}(2,\mathbb{C})$. Si l'on note $\bar{\psi}_\pi$ et $\bar{\varphi}_{\mathcal{X}}$ les restrictions respectives de ψ_π et $\varphi_{\mathcal{X}}$ à $W_{\mathbb{R}}$ et ${}^L G_{\mathcal{X}}$, on obtient le diagramme commutatif (qu'il s'agit d'établir) :

(1.3)
$$\begin{array}{ccc} W_{\mathbb{R}} & \xrightarrow{\phi_\pi} & {}^L G_{\mathcal{X}} \\ & \searrow^{\bar{\psi}_\pi} & \downarrow{\scriptstyle \bar{\varphi}_{\mathcal{X}}} \\ & & \mathcal{G} \hookrightarrow {}^L G \end{array}$$

L'étape suivante est alors de calculer explicitement $\mathcal{G}$. Ceci est l'objet de la section 6. Dans les cas 2, 5, 6, 11, 12, 13 et 9, 10 avec n pair, qui sont les plus simples, ce commutant $\mathcal{G}$ est isomorphe au L-groupe d'un autre groupe réductif ayant (nécessairement) de la série discrète. Il nous reste alors seulement à vérifier que c'est bien le L-groupe de [KS17]. Dans les cas 7, 8 et 9, 10 avec n impair, le commutant $\mathcal{G}$ est un produit direct d'un L-groupe d'un groupe réductif quasi-déployé ayant de la série discrète par un groupe $\mathcal{C}$ fini ou isomorphe à $\mathbf{SO}(2,\mathbb{C})$. On vérifie alors que le L-groupe est bien celui de [KS17], et il reste à montrer que la projection des paramètres d'Arthur sur $\mathcal{C}$ est triviale. C'est là un point délicat, qui peut être faux pour H trop petit, nous y avons fait allusion au début de cette introduction. Il faut pour cela utiliser la propriété clé que (génériquement) le K-type minimal de π a des invariants sous $K \cap H$ ou la reformulation (*iiib*) de cette propriété. Dans une version plus générale des conjectures, où l'on introduit un caractère χ de H trivial sur H_e, on aurait une propriété du même type avec un morphisme de $W_{\mathbb{R}}$ dans $\mathcal{C}$ éventuellement non trivial, mais ne dépendant que de $\mathcal{X}$ et de χ. Dans les trois cas restants, 1, 3 et 4, les racines sphériques de $\mathcal{X}$ ne sont pas toutes des racines de $\mathbf{G}$. Ceci a pour effet que le commutant $\mathcal{G}$ est beaucoup plus gros que le groupe ${}^L G_{\mathcal{X}}$ cherché.

La section 5 donne des constructions de L-morphismes utilisés pour construire certains des morphismes $\bar{\varphi}_{\mathcal{X}}$. La fin de la vérification des conjectures fait l'objet de la section 7.

Dans la section 8 nous considérons les paramètres d'Arthur ψ déterminés dans la section 3.3, mais ici nous ne partons pas d'une série discrète π, ni même de la forme réelle G. Au contraire on cherche à savoir quelles sont les représentations π du paquet $\Pi(\psi)$ qui sont des séries discrètes pour $\mathcal{X}$, pour un certain $\mathcal{X}$. L'idée est évidemment que tout paquet associé à un

morphisme d'Arthur qui se factorise par ${}^L G_{\mathcal{X}} \times \mathbf{SL}(2,\mathbb{C})$ devrait contenir au moins une série discrète pour au moins une forme réelle $\mathcal{X}$ pertinente. On vérifie essentiellement cette propriété, on renvoie à la section 8 pour une discussion précise au cas par cas. Rappelons que la théorie d'Arthur attache à toute représentation π de G dans un paquet $\Pi(G,\psi)$ de paramètre ψ un certain invariant $\epsilon(\pi)$, qui est dans les cas qui nous occupent ici un caractère du groupe $A(\psi)$ des composantes connexes du centralisateur de ψ dans $G^\vee$ (les $A(\psi)$ sont ici des 2-groupes finis). Les résultats de [MR20], [MR19] déterminent (un choix de donnée de Whittaker pour une forme intérieure pure quasi-déployée de G étant fixée) ces caractères $\epsilon(\pi)$. Il s'avère que l'on peut lire sur le caractère $\epsilon(\pi)$ attaché à π si cette représentation est une série discrète de $\mathcal{X}$. En particulier, si deux représentations dans $\Pi(G,\psi)$ donnent le même caractère de $A(\psi)$ et que l'une est une série discrète pour $\mathcal{X}$, alors l'autre l'est aussi. Les résultats sont plutôt jolis et essentiellement indépendant des choix, même si nous n'avons pas trouvé une façon uniforme de le formuler. Ces calculs nous permettent de constater la chose suivante : certains paramètres ψ de G sont obtenus comme ci-dessus pour deux espaces symétriques $\mathcal{X} = G/H$ et $\mathcal{X}' = G/H'$, mais une représentation π du paquet ne contribue au plus qu'à un seul des deux espaces symétriques.

Nous remercions très chaleureusement Y. Sakellaridis qui nous a corrigé une erreur dans une première version et nous a expliqué l'introduction du produit semi-direct de $\mathbf{Sp}(2k,\mathbb{C}) \ltimes W_{\mathbb{R}}$ dans le cas 3. Nous remercions aussi le referee anonyme pour sa lecture attentive de l'article qui a permis de corriger de nombreuses coquilles.

2. Séries discrètes des espaces symétriques

2.1. *Notations pour les espaces symétriques.* Si M est un groupe de Lie, on note M_e la composante connexe de l'identité dans M. Si $\mathbf{M}$ un groupe algébrique réductif, on note $\mathbf{M}^0$ sa composante neutre au sens des groupes algébriques.

Soit $\mathbf{G}$ un groupe algébrique réductif connexe défini sur $\mathbb{R}$ et soit $G = \mathbf{G}(\mathbb{R})$ le groupe de ses points réels. Soit σ une involution de $\mathbf{G}$, définie sur $\mathbb{R}$. Posons $\mathbf{H} = \mathbf{G}^\sigma$ et soit H un sous-groupe de G avec $\mathbf{H}(\mathbb{R})_e \subset H \subset \mathbf{H}(\mathbb{R})$.

Notons $\mathcal{X}$ l'espace symétrique G/H. Les sous-représentations irréductibles de G dans $L^2(\mathcal{X})$ forment un sous-espace noté $L^2_d(\mathcal{X})$ et sont appelées séries discrètes de $\mathcal{X}$. Elles ont été décrites grâce aux travaux de nombreux mathématiciens ([FJ80], [OM84], [Sch83], [Vog88]); en particulier, Vogan donne une description en termes d'induction cohomologique que nous allons rappeler ci-dessous, après avoir introduit les notations nécessaires.

Remarque 2.1. Dans ces références, on suppose souvent G connexe et/ou semi-simple et parfois aussi H connexe. Il nous faudra donc étendre ces

	G/H		$\check{\mathfrak{g}}_X$	$\check{\mathfrak{l}}_X$	${}^L G_{\mathcal{X}}$
1	$\mathbf{GL}(n,\mathbb{R})/\mathbf{GL}(p,\mathbb{R})\times\mathbf{GL}(n-p,\mathbb{R})$	$2p\le n$	$\mathfrak{sp}(2p)$	$(\mathfrak{gl}_1)^{2p}\times\mathfrak{gl}_{n-2p}$	$\mathbf{Sp}(2p,\mathbb{C})\times W_{\mathbb{R}}$
2	$\mathbf{U}(p,q)/\mathbf{O}(p,q)$		$\mathfrak{gl}(p+q)$	$(\mathfrak{gl}_1)^{p+q}$	$\mathbf{GL}(p+q,\mathbb{C})\ltimes W_{\mathbb{R}}$
3	$\mathbf{U}(p,q)/\mathbf{U}(r,s)\times\mathbf{U}(r',s')$	$r\le r',\ s\le s'$	$\mathfrak{sp}(2(r+s))$	$(\mathfrak{gl}_1)^{2(r+s)}\times\mathfrak{gl}_{r'+s'-(r+s)}$	$\begin{cases} n \text{ pair } \mathbf{Sp}(2(r+s),\mathbb{C})\times W_{\mathbb{R}} \\ n \text{ impair } \mathbf{Sp}(2(r+s))\ltimes W_{\mathbb{R}}\end{cases}$
4	$\mathbf{U}(n,n)/\mathbf{GL}(n,\mathbb{C})$		$\mathfrak{sp}(2n)$	$(\mathfrak{gl}_1)^{2n}$	$\mathbf{Sp}(2n,\mathbb{C})\times W_{\mathbb{R}}$
5	$\mathbf{U}(2p,2q)/\mathbf{Sp}(p,q)$		$\mathfrak{gl}(p+q)$	$(\mathfrak{gl}_2)^{p+q}$	$\mathbf{GL}(p+q,\mathbb{C})\ltimes W_{\mathbb{R}}$
6	$\mathbf{U}(n,n)/\mathbf{Sp}(2n,\mathbb{R})$		$\mathfrak{gl}(n)$	$(\mathfrak{gl}_2)^{n}$	$\mathbf{GL}(n,\mathbb{C})\ltimes W_{\mathbb{R}}$
7	$\mathbf{SO}(p,q)/\mathbf{SO}(r,s)\times\mathbf{SO}(r',s')$	$p+q=2n+1$ $r\le r',\ s\le s'$	$\mathfrak{sp}(2(r+s))$	$\mathfrak{sp}(2(n-(r+s))\times(\mathfrak{gl}_1)^{r+s}$	$\mathbf{Sp}(2(r+s),\mathbb{C})\times W_{\mathbb{R}}$
8	$\mathbf{SO}(p,q)/\mathbf{SO}(r,s)\times\mathbf{SO}(r',s')$	$p+q=2n$ $r\le r',\ s\le s'$	$\mathfrak{so}(2(r+s)+1)$	$\mathfrak{so}(2(n-(r+s))\times(\mathfrak{gl}_1)^{r+s}$	$\mathbf{SO}(2(r+s)+1,\mathbb{C})\times W_{\mathbb{R}}$
9	$\mathbf{SO}(2p,2q)/\mathbf{U}(p,q)$	$p+q=n$ $(p-1)(q-1)\neq 0$ [2]	$\mathfrak{sp}(2(p+q))$	$(\mathfrak{gl}_2)^{\lfloor n/2\rfloor}$ ($+\mathfrak{so}(2)$ si n est impair)	$\begin{cases} n \text{ pair } \mathbf{Sp}(n,\mathbb{C})\times W_{\mathbb{R}} \\ n \text{ impair } \mathbf{Sp}(n-1,\mathbb{C})\times W_{\mathbb{R}}\end{cases}$
10	$\mathbf{SO}(n,n)/\mathbf{GL}(n,\mathbb{R})$		$\mathfrak{sp}(2n)$	$(\mathfrak{gl}_2)^{\lfloor n/2\rfloor}$ ($+\mathfrak{so}(2)$ si n est impair)	$\begin{cases} n \text{ pair } \mathbf{Sp}(n,\mathbb{C})\times W_{\mathbb{R}} \\ n \text{ impair } \mathbf{Sp}(n-1,\mathbb{C})\times W_{\mathbb{R}}\end{cases}$
11	$\mathbf{Sp}(2n,\mathbb{R})/\mathbf{Sp}(2p,\mathbb{R})\times\mathbf{Sp}(2(n-p),\mathbb{R})$	$2p\le n$	$\mathfrak{sp}(2p)$	$(\mathfrak{gl}_2)^{p}\times\mathfrak{so}(2(n-2p)+1)$	$\mathbf{Sp}(2p,\mathbb{C})\times W_{\mathbb{R}}$
12	$\mathbf{Sp}(4n,\mathbb{R})/\mathbf{Sp}(2n,\mathbb{C})$		$\mathfrak{sp}(2n)$	$(\mathfrak{gl}_2)^{n}$	$\mathbf{Sp}(2n,\mathbb{C})\times W_{\mathbb{R}}$
13	$\mathbf{Sp}(2n,\mathbb{R})/\mathbf{GL}(n,\mathbb{R})$		$\mathfrak{so}(2n+1)$	$(\mathfrak{gl}_1)^{n}$	$\mathbf{SO}(2n+1)\times W_{\mathbb{R}}$

TABLE 1. Espaces symétriques classiques avec séries discrètes

	G/H	L	$L \cap H$
1	$\mathbf{GL}(n,\mathbb{R})/\mathbf{GL}(p,\mathbb{R}) \times \mathbf{GL}(n-p,\mathbb{R})$	$(\mathbb{C}^\times)^p \times \mathbf{GL}(n-2p,\mathbb{R})$	$(\mathbb{R}^\times)^p \times \mathbf{GL}(n-2p,\mathbb{R})$
2	$\mathbf{U}(p,q)/\mathbf{O}(p,q)$	$\mathbf{U}(1)^n$	$\{\pm 1\}^n$
3	$\mathbf{U}(p,q)/\mathbf{U}(r,s) \times \mathbf{U}(r',s')$	$(\mathbf{U}(1) \times \mathbf{U}(1))^{r+s} \times \mathbf{U}(r'-r,s'-s)$	$\mathbf{U}(1)^{r+s} \times \mathbf{U}(r'-r,s'-s)$
4	$\mathbf{U}(n,n)/\mathbf{GL}(n,\mathbb{C})$	$(\mathbf{U}(1) \times \mathbf{U}(1))^n$	$\mathbf{U}(1)^n$
5	$\mathbf{U}(2p,2q)/\mathbf{Sp}(p,q)$	$\mathbf{U}(2,0)^p \times \mathbf{U}(0,2)^q$	$\mathbf{SU}(2,0)^p \times \mathbf{SU}(0,2)^q$
6	$\mathbf{U}(n,n)/\mathbf{Sp}(2n,\mathbb{R})$	$\mathbf{U}(1,1)^n$	$\mathbf{SU}(1,1)^n$
7	$\mathbf{SO}(p,q)/\mathbf{SO}(r,s) \times \mathbf{SO}(r',s')$	$\mathbf{U}(1,0)^r \times \mathbf{U}(0,1)^s \times \mathbf{SO}(p-2r,q-2s)$	$\mathbf{SO}(p-2r,q-2s)$
8	$\mathbf{SO}(p,q)/\mathbf{SO}(r,s) \times \mathbf{SO}(r',s')$	$\mathbf{U}(1,0)^r \times \mathbf{U}(0,1)^s \times \mathbf{SO}(p-2r,q-2s)$	$\mathbf{SO}(p-2r,q-2s)$
9a	$\mathbf{SO}(2p,2q)/\mathbf{U}(p,q)$, p,q pair	$\mathbf{U}(2,0)^{p/2} \times \mathbf{U}(0,2)^{q/2}$	$\mathbf{SU}(2,0)^{p/2} \times \mathbf{SU}(0,2)^{q/2}$
9b	$\mathbf{SO}(2p,2q)/\mathbf{U}(p,q)$, p pair, q impair	$\mathbf{U}(2,0)^{p/2} \times \mathbf{U}(0,2)^{q-1/2} \times \mathbf{SO}(0,2)$	$\mathbf{SU}(2,0)^{p/2} \times \mathbf{SU}(0,2)^{q-1/2} \times \mathbf{SO}(0,2)$
10a	$\mathbf{SO}(n,n)/\mathbf{GL}(n,\mathbb{R})$, n pair	$\mathbf{U}(1,1)^{n/2}$	$\mathbf{SU}(1,1)^{n/2}$
10b	$\mathbf{SO}(n,n)/\mathbf{GL}(n,\mathbb{R})$, n impair	$\mathbf{U}(1,1)^{n-1/2} \times \mathbf{SO}(1,1)$	$\mathbf{SU}(1,1)^{n-1/2} \times \mathbf{SO}(1,1)$
11	$\mathbf{Sp}(2n,\mathbb{R})/\mathbf{Sp}(2p,\mathbb{R}) \times \mathbf{Sp}(2(n-p),\mathbb{R})$	$\mathbf{U}(1,1)^p \times \mathbf{Sp}(2(n-2p),\mathbb{R})$	$\mathbf{SU}(1,1)^p \times \mathbf{Sp}(2(n-2p),\mathbb{R})$
12	$\mathbf{Sp}(4n,\mathbb{R})/\mathbf{Sp}(2n,\mathbb{C})$	$\mathbf{U}(2)^n$	$\mathbf{SU}(2)^n$
13	$\mathbf{Sp}(2n,\mathbb{R})/\mathbf{GL}(n,\mathbb{R})$	$\mathbf{U}(1)^n$	$\{\pm 1\}^n$

TABLE 2. L et $L \cap H$

résultats en les adaptant à nos groupes classiques, dont certains ne sont pas semi-simples connexes.

Rappelons d'abord un critère dû à Oshima et Matsuki pour que $\mathcal{X}$ admette des séries discrètes. Fixons une involution de Cartan θ de G qui commute à σ, et soit $K = G^\theta$ le sous-groupe compact maximal de G associé à θ. On note $\mathfrak{g}_0$, $\mathfrak{h}_0$, $\mathfrak{k}_0$ les algèbres de Lie de G, H, K respectivement, et plus généralement, l'algèbre de Lie d'un groupe de Lie est notée par la lettre gothique correspondante avec un indice 0. Lorsqu'on enlève l'indice 0, ceci désigne alors l'algèbre de Lie complexifiée. De plus, les involutions θ et σ donnent lieu à des décompositions :

$$\mathfrak{g}_0 = \mathfrak{k}_0 \oplus \mathfrak{p}_0, \quad \mathfrak{g}_0 = \mathfrak{h}_0 \oplus \mathfrak{s}_0, \quad \mathfrak{g}_0 = (\mathfrak{k}_0 \cap \mathfrak{h}_0) \oplus (\mathfrak{k}_0 \cap \mathfrak{s}_0) \oplus (\mathfrak{p}_0 \cap \mathfrak{h}_0) \oplus (\mathfrak{p}_0 \cap \mathfrak{s}_0).$$

Rappelons qu'un sous-espace de Cartan de $\mathfrak{g}_0$ pour $\mathcal{X}$ est une sous-algèbre abélienne, composée d'éléments semisimples, contenue dans $\mathfrak{s}_0$ et maximale pour l'inclusion avec ces propriétés. Le rang de l'espace symétrique $\mathcal{X}$ est égal à la dimension d'un sous-espace de Cartan. Notons $\mathcal{X}_K = K/K \cap H$: c'est un espace symétrique compact.

THÉORÈME 2.1 (Oshima-Matsuki). *L'espace symétrique $\mathcal{X}$ admet des séries discrètes si et seulement si le rang de $\mathcal{X}$ est égal au rang de $\mathcal{X}_K$, c'est-à-dire qu'un sous-espace de Cartan de $\mathfrak{k}_0$ pour $\mathcal{X}_K$ est aussi un sous-espace de Cartan de $\mathfrak{g}_0$ pour $\mathcal{X}$.*

Un sous-espace de Cartan de $\mathfrak{g}_0$ pour $\mathcal{X}$ comme dans le théorème sera appelé sous-espace de Cartan compact.

REMARQUE 2.2. Comme expliqué dans la remarque 2.1, le théorème ci-dessus est démontré dans la littérature pour un espace symétrique G/H avec G connexe et semi-simple. Le cas plus général envisagé ici se réduit au cas connexe et semi-simple de manière routinière.

2.2. *Listes des espaces symétriques classiques avec séries discrètes.* Nous nous plaçons maintenant dans le cas où le groupe $\mathbf{G}$ est un groupe classique, c'est-à-dire que G est un groupe général linéaire $\mathbf{GL}(n, \mathbb{R})$, ou bien un groupe unitaire $\mathbf{U}(p, q)$, ou bien un groupe symplectique $\mathbf{Sp}(2n, \mathbb{R})$, ou bien un groupe spécial orthogonal $\mathbf{SO}(p, q)$. Pour déterminer la liste des espaces symétriques $\mathcal{X} = G/H$ avec G comme ci-dessus, et vérifiant de plus la condition du théorème 2.1 d'existence de séries discrètes, on utilise la classification de Wikipedia [Wik] pour avoir tous les $\mathcal{X}$ possibles, et la condition de rang se vérifie en utilisant la table 3 de [KS17] : le rang de $\mathcal{X}$ est égal au rang de son algèbre de Lie duale $\check{g}_\mathcal{X}$. On peut alors comparer au rang de l'espace symétrique compact $\mathcal{X}_K = K/K \cap H$. On obtient la liste de 13 cas donnée dans l'introduction.

2.3. *Notations pour l'induction cohomologique.* Dans ce paragraphe, on garde les mêmes notations que précédemment concernant le groupe G, mais on oublie l'espace symétrique.

Soit $\mathfrak{t}_0$ une sous-algèbre abélienne de $\mathfrak{k}_0$. Posons $L = \mathrm{Cent}_G(\mathfrak{t}_0)$. C'est un facteur de Levi θ-stable de G (un c-Levi dans la terminologie de Shelstad). Soit $\mathfrak{q} = \mathfrak{l} \oplus \mathfrak{u}$ une sous-algèbre parabolique θ-stable de $\mathfrak{g}$. On note $\mathcal{R}^i_{\mathfrak{q},L,G}$ le foncteur d'induction cohomologique de Vogan-Zuckerman (*cf.* [Vog81], §6.3.1) en degré i, de la catégorie des $(\mathfrak{l}, L \cap K)$-modules vers la catégorie des $(\mathfrak{g}, K)$-modules. Nous renvoyons à [KV95], Def. 0.49 et 0.52 pour les définitions du good range et du fair range. Dans cet article, nous allons toujours considérer des inductions cohomologiques à partir de caractères unitaires dans le fair range. Dans ce contexte, le degré qui nous intéresse particulièrement, et même exclusivement, est $S = \dim(\mathfrak{u} \cap \mathfrak{k})$, et nous posons pour tout caractère unitaire π_L de L,

$$A_{\mathfrak{q}}(\pi_L) = \mathcal{R}^S_{\mathfrak{q},L,G}(\pi_L).$$

2.4. *Séries discrètes de* $\mathcal{X}$ *comme* $A_{\mathfrak{q}}(\pi_L)$. Reprenons les notations du paragraphe 2.1. Supposons que $\mathcal{X}$ vérifie la condition du théorème 2.1 et admet donc des séries discrètes. Fixons un sous-espace de Cartan compact de $\mathfrak{t}_0$ pour $\mathcal{X}$ (tous les choix possibles pour $\mathfrak{t}_0$ sont conjugués sous $K \cap H$). Comme dans le paragraphe 2.3, posons $L = \mathrm{Cent}_G(\mathfrak{t}_0)$. On a dans ce cas $\mathfrak{l} = (\mathfrak{l} \cap \mathfrak{h}) \oplus \mathfrak{t}$, c'est la décomposition en sous-espaces propres pour σ. On dit que L et $\mathfrak{l}$ sont associés à l'espace symétrique $\mathcal{X}$. Notons $\mathcal{Q}(\mathfrak{l})$ l'ensemble des sous-algèbres paraboliques θ-stables $\mathfrak{q}$ de $\mathfrak{g}$ de facteur de Levi $\mathfrak{l}$.

Nous allons maintenant donner une description des séries discrètes pour les espaces symétriques de notre liste comme modules $A_{\mathfrak{q}}(\pi_L)$. Dans la littérature ([FJ80], [OM84],[Sch83], [Vog88]) cette description est disponible sous les hypothèses G et H connexes et G semi-simple. Nous allons donc partir de là et adapter les résultats aux espaces de notre liste. On fait donc (provisoirement) ces hypothèses dans ce qui suit.

Soit $\mathfrak{q} = \mathfrak{l} \oplus \mathfrak{u} \in \mathcal{Q}(\mathfrak{l})$. On introduit d'abord un ensemble de paramètres relatif à $\mathfrak{q}$ qui va paramétrer la plus grande partie des séries discrètes.

Définition 2.3. Soit $\mathcal{P}'(\mathfrak{q})$ l'ensemble des $(\mathfrak{l}, L \cap K)$-modules irréductibles π_L vérifiant les conditions $(i)'$, $(ii)'$ et $(iii)'$ suivantes.

$(i)'$ π_L est un caractère unitaire de L, de différentielle nulle sur $\mathfrak{h}_0 \cap \mathfrak{l}_0$.

$(ii)'$ π_L est dans le good range pour $\mathfrak{q}$.

Le bottom-layer (*cf. [KV95]*, § V. 6) de $A_{\mathfrak{q}}(\pi_L)$ est alors est constitué du K-type V_μ de plus haut poids $\mu = \pi_L \otimes \bigwedge^{\mathrm{top}}(\mathfrak{u} \cap \mathfrak{p})$. Ce K-type V_μ est le K-type minimal de $A_{\mathfrak{q}}(\pi_L)$.

$(iii)'$ Le K-type V_μ de plus haut poids $\mu = \pi_L \otimes \bigwedge^{\mathrm{top}}(\mathfrak{u} \cap \mathfrak{p})$ a des invariants non triviaux sous $H \cap K$.

Ici, ce que nous entendons par «plus haut poids » d'une représentation irréductible V de K est la représentation de $L \cap K$ dans $H^0(\mathfrak{u} \cap \mathfrak{k}, V)$ qui caractérise V ([Kos61]).

Pour obtenir toutes les séries discrètes, il faut autoriser π_L à décrire tout le fair range. Le problème dans ce cas est que le bottom-layer de $A_{\mathfrak{q}}(\pi_L)$ peut être vide, et la condition $(iii)'$ n'a plus de sens. Pour compléter la définition, Vogan remarque que les séries discrètes de $\mathcal{X}$ forment des familles cohérentes (voir [Vog88] pour une définition précise de ces familles). On introduit donc un ensemble de paramètres plus grand.

DÉFINITION 2.4. Soit $\mathcal{P}(\mathfrak{q})$ l'ensemble des $(\mathfrak{l}, L\cap K)$-modules irréductibles π_L vérifiant les conditions (i), (ii) et (iii) suivantes.

(i) π_L est un caractère unitaire de L, de différentielle nulle sur $\mathfrak{h}_0 \cap \mathfrak{l}_0$.

(ii) π_L est dans le fair range pour $\mathfrak{q}$.

(iii) Le module $A_{\mathfrak{q}}(\pi_L)$ est dans une famille cohérente de modules $A_{\mathfrak{q}}(\pi'_L)$ dont génériquement les paramètres π'_L vérifient les conditions $(ii)'$ et $(iii)'$ de la définition précédente.

Dans le fair range, il se peut que $A_{\mathfrak{q}}(\pi_L)$ soit nul. S'il ne l'est pas, Vogan a démontré ([Vog88]) qu'il est irréductible.

PROPOSITION 2.5. *La condition $(iii)'$ de la définition 2.3 est équivalente (sous les conditions $(i)'$ et $(ii)'$) à la suivante :*

$(iiib)$ le caractère $\pi_L \otimes \bigwedge^{\mathrm{top}}(\mathfrak{u}\cap\mathfrak{p})$ de $L\cap K$ est trivial sur $L\cap H\cap K$. La condition (iii) de la définition 2.4 est équivalente à $(iiib)$ (sous les conditions (i) et (ii)).

Démonstration. La première assertion est démontrée en utilisant la dualité de Flensted-Jensen et le théorème de Cartan-Helgason, ceci se trouve dans [FJ80], [Sch83],[OM84]. Cette condition étant stable pour les familles cohérentes, on obtient la seconde assertion. □

THÉORÈME 2.2 (Oshima-Matsuki-Schlichtkrull-Vogan). *Soit $\mathcal{X} = G/H$ un espace symétrique avec G et H connexes et G semi-simple. On a une décomposition*

$$L^2_d(\mathcal{X}) = \bigoplus_{\mathfrak{q}\in\mathcal{Q}(\mathfrak{l}),\pi_L\in\mathcal{P}(\mathfrak{q})} A_{\mathfrak{q}}(\pi_L).$$

D'autre part les $A(\pi_L)$, sont irréductibles ou nuls.

La première assertion est due à Oshima-Matsuki [OM84], à la suite du travail fondamental de Flensted-Jensen [FJ80], avec une description différente des $A(\pi_L)$. Le lien avec la description en termes de modules cohomologiquement induits est due à Schlichtkrull [Sch83] et Vogan [Vog88], et l'irréductibilité est due à à Vogan [Vog88]. Pour faire le lien avec la littérature, la remarque suivante peut s'avérer utile.

REMARQUE 2.6. L'action de $\mathfrak{l}\cap\mathfrak{k}\cap\mathfrak{h}$ sur $\bigwedge^{\mathrm{top}}(\mathfrak{u}\cap\mathfrak{p})$ est triviale. On étend le sous-espace de Cartan $\mathfrak{t}_0$ en une sous-algèbre de Cartan $\mathfrak{t}_0 \oplus \mathfrak{t}'_0$ de $\mathfrak{k}_0$ avec $\mathfrak{t}'_0$ dans $\mathfrak{h}_0 \cap \mathfrak{k}_0$. Le sous-espace $\mathfrak{t}'_0$ est donc une sous-algèbre de Cartan de

$\mathfrak{d}_0 := \mathfrak{h}_0 \cap \mathfrak{k}_0 \cap \mathfrak{l}_0$. Comme $\bigwedge^{\text{top}}(\mathfrak{u} \cap \mathfrak{p})$ est une représentation de dimension 1, l'action de $[\mathfrak{d}, \mathfrak{d}]$ sur $\bigwedge^{\text{top}}(\mathfrak{u} \cap \mathfrak{p})$ est triviale. Il reste donc à voir que l'action de $\mathfrak{t}'$ est triviale. L'argument est donné dans [Sch83], en bas de la page 140.

Voyons comment le théorème 2.2 peut s'étendre à des espaces symétriques plus généraux.

Première étape. Elle consiste à obtenir une description analogue pour $\mathcal{X} = G/H$ avec les mêmes hypothèses sur G, mais sans hypothèse sur H autre que $(G^\sigma)_e = H_e \subset H \subset G^\sigma$.

Remarquons que l'on a une action par translation à droite de H sur $L^2(G/H_e)$ commutant avec l'action par translation à gauche de G. En effet, si $f \in L^2(G/H_e)$, on a quels que soient $g \in G$, $h' \in H$ et $h \in H_e$,

$$(r(h').f)(gh) = f(ghh') = f(gh'(h'^{-1}hh') = f(gh') = (r(h').f)(g).$$

Cette action est triviale sur H_e. On a donc une action de H/H_e sur $L^2(G/H_e)$ commutant avec l'action par translation à gauche de G. Fixons une série discrète $\pi = A_{\mathfrak{q}}(\pi_L)$ (suffisamment régulière, disons $\pi_L \in \mathcal{P}'(\mathfrak{q})$ de $L^2(G/H_e)$ et considérons l'espace

$$\mathcal{A} = \text{Hom}_{\mathfrak{g},K}(\pi, L^2(G/H_e)).$$

On sait que π a multiplicité un dans $L^2(G/H_e)$, donc $\mathcal{A}$ est de dimension 1. L'action de H/H_e sur $\mathcal{A}$ héritée de l'action sur $L^2(G/H_e)$ est donc un caractère de ce groupe, et l'on en conclut qu'il existe un caractère χ de H/H_e tel que pour tout $\phi \in \mathcal{A}$,

$$[h \cdot \phi : v \mapsto r(h) \cdot \phi(v)] = [(\chi(h)\phi) : v \mapsto \chi(h)\phi(v)]$$

et donc $\phi(v)$ est dans l'espace noté précédemment $L^2(G/H)_\chi$. Par réciprocité de Frobenius, on a

$$\mathcal{A} = \text{Hom}_{\mathfrak{g},K}(\pi, L^2(G/H_e)) \simeq \mathcal{B} = \text{Hom}_{\mathfrak{h},K\cap H_e}(\pi, \chi).$$

et l'action de H/H_e sur $\mathcal{A}$ se transporte en une action sur $\mathcal{B}$ (par ce même caractère χ). On a un morphisme de restriction non nul au K-type minimal V_μ de π :

$$\mathcal{B} = \text{Hom}_{\mathfrak{h},K\cap H_e}(\pi, \chi) \longrightarrow \text{Hom}_{K\cap H_e}(V_\mu, \chi).$$

On en conclut que V_μ possède des vecteurs se transformant par χ sous l'action de H. On a donc obtenu la première partie du résultat suivant :

Proposition 2.7. *Soit $\mathcal{X} = G/H$ un espace symétrique avec G semi-simple connexe, admettant des séries discrètes tordues par un caractère χ de H/H_e. Alors*

$$L^2(\mathcal{X})_\chi = \bigoplus_{\mathfrak{q}\in\mathcal{Q}(\mathfrak{l}),\pi_L\in\mathcal{P}(\mathfrak{q})_\chi} A_{\mathfrak{q}}(\pi_L).$$

où l'espace des paramètres $\mathcal{P}(\mathfrak{q})_\chi$ est défini comme dans les définitions 2.3 et 2.4 en remplaçant les conditions $(iii)'$ et (iii) respectivement par

(iii)′1. Le K-type V_μ de plus haut poids $\mu = \pi_L \otimes \bigwedge^{\mathrm{top}}(\mathfrak{u} \cap \mathfrak{p})$ a des vecteurs non nuls se transformant selon le caractère χ pour l'action de $H \cap K$.

(iiib)1. Le caractère $\pi_L \otimes \bigwedge^{\mathrm{top}}(\mathfrak{u} \cap \mathfrak{p})$ de $L \cap K$ coïncide avec le caractère χ sur $L \cap H \cap K$.

Démonstration. Il nous faut maintenant reformuler la condition *(iiib)* et il faut revenir à la démonstration de l'équivalence entre *(iii)'* et *(iiib)* dans le cas connexe. On utilise la dualité de Flensted-Jensen entre (G, H_e, K) et un triplet similaire (G^d, K^d, H^d) de groupes ayant pour complexification respective $\mathbf{G}$, $\mathbf{K}$ et $\mathbf{H}^0$ ($\mathbf{H}^0$ est la composante neutre du groupe réductif $\mathbf{H} = \mathbf{G}^\sigma$). De plus H^d est un sous-groupe compact maximal de G^d. On voit alors V_μ comme une représentation algébrique de $\mathbf{K}$ ayant des invariants sous $\mathbf{H}^0 \cap \mathbf{K}$ et par restriction, comme une représentation de dimension finie de K^d ayant des invariants sous $H^d \cap K^d$. Or $K^d \cap H^d$ est un sous-groupe compact maximal de K^d. On remarque que $\mathbf{L} \cap \mathbf{K}$ est un sous-groupe de Levi de $\mathbf{K}$. Le théorème de Cartan-Helgason nous dit alors que le plus haut poids μ est invariant sous $\mathbf{L} \cap \mathbf{K} \cap \mathbf{H}^0$.

Ceci constitue la démonstration de l'équivalence entre *(iii)′* et *(iiib)* et il s'agit de l'étendre avec $\mathbf{H}$ à la place de $\mathbf{H}^0$. Pour cela on fait agir $\mathbf{H} \cap \mathbf{K}$ sur $\mathrm{Hom}_{\mathbf{H}^0 \cap \mathbf{K}}(V_\mu, 1)$ ce qui par restriction donne une action de $(\mathbf{H} \cap \mathbf{K})(\mathbb{C})/(\mathbf{H}^0 \cap \mathbf{K})(\mathbb{C})$ sur l'espace $\mathrm{Hom}_{(\mathbf{L} \cap \mathbf{K}^0 \cap \mathbf{H})(\mathbb{C})}(\mu, 1)$. La conclusion est alors évidente. □

Deuxième étape. L'étape suivante de la généralisation consiste à autoriser G à être réductif, mais toujours connexe. On écrit alors $G = Z(G)_e G_1$ où G_1 est semi-simple connexe et $Z(G)$ est le centre de G. Les groupes G_1 et $Z(G)_e$ sont stables par l'involution σ. On fait tout d'abord l'hypothèse suivante, vérifiée dans certains cas de notre liste où G est non réductif.

Hypothèse 1 : $Z(G)_e \subset H_e$.

Posons $H_1 = G_1 \cap H$. On a alors un difféomorphisme, induit par l'inclusion de G_1 dans G :

$$G_1/H_1 \longrightarrow G/H.$$

L'injectivité est immédiate puisque l'on a quotienté par $G_1 \cap H$ et la surjectivité est conséquence de l'hypothèse. Pour tout caractère χ de $H_1/H_{1,e}$, on a donc une description de $L^2_d(\mathcal{X})_\chi$ comme représentation de G_1 donné par la proposition 2.7. D'autre part, grâce à l'hypothèse 1, $Z(G)_e$ agit trivialement sur $L^2_d(\mathcal{X})_\chi$. Enfin

$$H_1/H_{1,e} = G_1 \cap H/(G_1 \cap H)_e \twoheadrightarrow G_1 \cap H/G_1 \cap H_e \simeq H/H_e.$$

On peut donc identifier les caractères de H/H_e avec des caractères de $H_1/H_{1,e}$. Les modules entrant dans la décomposition de $L^2_d(\mathcal{X})_\chi$ comme représentation de G sont donc les $A_{\mathfrak{q}}(\pi_L)$ de la décomposition comme représentation de G_1, étendu par l'action triviale du centre $Z(G)_e$.

Exemple 2.8. Pour étudier le premier exemple de notre liste, on considère donc déjà l'espace symétrique

$$G/H = \mathbf{GL}^+(n,\mathbb{R})/(\mathbf{GL}(p,\mathbb{R}) \times \mathbf{GL}(n-p,\mathbb{R}))^+,$$

où le + indique que l'on prend le sous-groupe (connexe) des matrices de déterminant strictement positif. Le groupe $Z(G)_e$ est alors le sous-groupe des matrices scalaires λI_n avec $\lambda > 0$, G_1 est le groupe $\mathbf{SL}(n,\mathbb{R})$, $H_1 = (\mathbf{GL}(p,\mathbb{R}) \times \mathbf{GL}(n-p,\mathbb{R})) \cap \mathbf{SL}(n,\mathbb{R})$ et l'hypothèse 1 est clairement vérifiée. On a de plus ici $H_1/H_{1,e} \simeq H/H_e \simeq \mathbb{Z}/2\mathbb{Z}$. Les cas 3 et 4 de la liste sont aussi des exemples où l'hypothèse 1 est vérifiée, et de plus dans ces cas, les groupes sont tous connexes.

Remarquons que la condition sur l'action du centre est déjà dans la condition (i) de la définition de l'espace des paramètres, sous l'hypotèse ci-dessus $Z(G)_e \subset H_e$

Traitons maintenant les cas restants de notre liste où G n'est pas semi-simple. Commençons par la variante du cas 2 avec H connexe, $G/H = \mathbf{U}(p,q)/\mathbf{SO}(p,q)$. On a alors $G_1 = \mathbf{SU}(p,q)$, $Z(G) = Z(G)_e = \mathbf{U}(1)$. Ce qui va servir ici est la compacité de ce centre. Posons $\mathcal{X}_1 = G_1/\mathbf{SO}(p,q)$. Considérons l'application naturelle, surjective

$$\mathbf{U}(1) \times \mathcal{X}_1 = \mathbf{U}(1) \times \mathbf{SU}(p,q)/\mathbf{SO}(p,q) \longrightarrow \mathbf{U}(p,q)/\mathbf{SO}(p,q) = \mathcal{X}.$$

C'est un fibré principal de fibre $\boldsymbol{\mu}_n$, le groupe des racines n-ième de l'unité. Le théorème 2.2 donne une description du spectre discret de $\mathcal{X}_1$. On en déduit facilement une description du spectre discret de $\mathbf{U}(1) \times \mathcal{X}_1$ comme représentation de $\mathbf{U}(1) \times \mathbf{SU}(p,q)$, puis du spectre discret de $\mathcal{X}$ comme représentation de $\mathbf{U}(1) \times_{\boldsymbol{\mu}_n} \mathbf{SU}(p,q) = \mathbf{U}(p,q)$. On passe de $\mathbf{U}(p,q)/\mathbf{SO}(p,q)$ à $\mathbf{U}(p,q)/\mathbf{O}(p,q)$ comme dans la première étape ci-dessus.

La conclusion pour ce cas est donc que la description de $L^2_d(\mathcal{X})$ du théorème 2.2 est valide sans aucun changement de la définition de l'espace des paramètres. La réduction ci-dessus s'applique aussi de la même façon aux cas 5 et 6.

Remarque 2.9. Le cas général pour un groupe G réductif connexe peut sans doute être obtenu par une combinaison des cas considérés ci-dessus, c'est-à-dire $Z(G)_e \subset H$ ou $Z(G)_e$ compact. En effet la condition sur le rang de $\mathcal{X}$ du théorème 2.1 implique que la partie de $Z(G)_e$ qui n'est pas dans H est compacte.

Troisième étape. Il s'agit maintenant d'étendre les résultats aux groupes G non connexes. Remarquons que pour les cas de notre liste, la non-connexité est limitée puisque $|G/G_e| \leq \mathbb{Z}/2\mathbb{Z}$ (cas 1, 7, 8, 9,10). Il est clair que $L^2_d(G/H_e)$ est l'induite de $L^2_d(G_e/H_e)$ de G_e à G. On a donc une description de $L^2_d(G/H_e)$ comme somme directe de modules $\mathrm{Ind}_{G_e}^G(A_{\mathfrak{q}}(\pi_{L_e}))$. D'autre part, on a aussi

$|L/L_e| \leq 2$, et si π_{L_e} est un caractère unitaire de L_e, alors $\mathrm{Ind}_{L_e}^{L}(\pi_{L_e})$ est somme de caractères π_L de L. Par [KV95], on a $\mathrm{Ind}_{G_e}^{G}(A_{\mathfrak{q}}(\pi_{L_e})) = \bigoplus A_{\mathfrak{q}}(\pi_L)$ où la somme est sur les caractères π_L apparaissant dans $\mathrm{Ind}_{L_e}^{L}(\pi_{L_e})$. La description du K-type minimal des $A_{\mathfrak{q}}(\pi_L)$ de plus haut poids $\pi_L \otimes \bigwedge^{\mathrm{top}}(\mathfrak{u} \cap \mathfrak{p})$ est similaire. On en déduit que la description du spectre discret de $L_d^2(G/H_e)$ est similaire à celle de $L_d^2(G_e/H_e)$, avec la même définition de l'espace des paramètres.

Quatrième étape. On passe maintenant de G/H_e avec G dans notre liste et non connexe à G/H avec H simplement soumis à $G_0^\sigma \subset H \subset G^\sigma$. La réduction se fait comme dans la première étape.

3. Paramètres d'Arthur des séries discrètes de $\mathcal{X}$

Dans cette section, on donne la forme générale des paramètres d'Arthur (de bonne parité) des groupes classiques, puis pour chaque série discrète π d'un espace symétrique $\mathcal{X}$ de la liste, nous donnons un paramètre d'Arthur explicite ψ_π tel que le paquet d'Arthur attaché à ce paramètre contienne π. On note $R[a]$ la représentation irréductible algébrique de $\mathbf{SL}(2,\mathbb{C})$ de dimension a.

3.1. *Le groupe de Weil.* Le groupe de Weil $W_{\mathbb{R}}$ est engendré par son sous-groupe $W_{\mathbb{C}} = \mathbb{C}^\times$ et un élément j, avec les relations

$$jzj^{-1} = \bar{z},\ (z \in \mathbb{C}^\times), \quad j^2 = -1. \tag{3.1}$$

On note $\mathbf{Triv}_{W_{\mathbb{R}}}$ le caractère trivial de $W_{\mathbb{R}}$ et $\mathbf{sgn}_{W_{\mathbb{R}}}$ la caractère quadratique, trivial sur $W_{\mathbb{C}} = \mathbb{C}^\times$ et valant -1 en l'élément j.

3.2. *Paramètres d'Arthur de bonne parité.* Ce qui suit est tiré de [MR20] auquel nous renvoyons le lecteur pour plus de détails.

3.2.1. $\mathbf{GL}(n,\mathbb{R})$. Dans ce paragraphe, $G = \mathbf{GL}(n,\mathbb{R})$, dont le L-groupe est $\mathbf{GL}(n,\mathbb{C}) \times W_{\mathbb{R}}$. Un paramètre d'Arthur $\psi : W_{\mathbb{R}} \times \mathbf{SL}(2,\mathbb{C}) \to \mathbf{GL}(n,\mathbb{C})$ peut se voir comme une représentation de dimension n de $W_{\mathbb{R}} \times \mathbf{SL}(2,\mathbb{C})$ et cette représentation est semi-simple. On peut donc la décomposer en somme directe de représentations irréductibles ψ_i, chaque ψ_i étant un produit tensoriel extérieur d'une représentation irréductible de $W_{\mathbb{R}}$, disons ϕ_i, et d'une représentation $R[a_i]$ de $\mathbf{SL}(2,\mathbb{C})$. Les représentations irréductibles de $W_{\mathbb{R}}$ sont de dimension 1 où 2, et rappelons que la restriction d'un paramètre d'Arthur à $W_{\mathbb{R}}$ est un paramètre de Langlands tempéré, ce doit donc être le cas de ces irréductibles. Celles de dimension 2 sont notées $\delta(s_1,s_2)$. Elles sont paramétrées par $s_1,\ s_2 \in \mathbb{C}$, avec $s_1 - s_2 \in \mathbb{Z}_{>0}$ et $s_1 + s_2 \in i\mathbb{R}$. Par la correspondance de Langlands, on associe à $\delta(s_1,s_2)$ une série discrète de $\mathbf{GL}(2,\mathbb{R})$ que l'on note aussi $\delta(s_1,s_2)$ et dont le caractère infinitésimal, identifié de la manière usuelle à un ensemble de deux nombres complexes, est $\{s_1,s_2\}$. Les représentations irréductibles de dimension 1 de $W_{\mathbb{R}}$ sont notées $\eta(\epsilon,s)$, avec

$\epsilon \in \{0,1\}$ et $s \in i\mathbb{R}$. Elles sont associées par la correspondance de Langlands aux caractères unitaires $x \mapsto \mathbf{sgn}(x)^\epsilon |x|^s$ de $\mathbf{GL}(1,\mathbb{R})$. Ainsi, on décompose un paramètre d'Arthur ψ en une somme directe

$$\psi = \bigoplus_{i=1}^{m} (\delta(s_{i,1}, s_{i,2}) \boxtimes R[a_i]) \oplus \bigoplus_{j=1}^{u} \left(\eta(\epsilon_j, s_j) \boxtimes R[a'_j]\right).$$

avec

$$2\sum_{i=1}^{m} a_i + \sum_{j=1}^{u} a'_j = n. \tag{3.2}$$

Le paquet d'Arthur associé à ψ est un singleton, consistant en une représentation unitaire irréductible notée $\pi^{\mathbf{GL}}(\psi)$ de $\mathbf{GL}(n,\mathbb{R})$. Cette représentation peut se décrire de la manière suivante. La donnée de la série discrète $\delta(s_{i,1}, s_{i,2})$ et de l'entier a_i détermine une représentation $\mathbf{Speh}(\delta(s_{i,1}, s_{i,2}), a_i)$ de $\mathbf{GL}(2a_i,\mathbb{R})$ et le caractère $\eta(\epsilon_j, s_j)$ de $\mathbb{R}^\times$ donne par composition avec le déterminant un caractère, encore noté $\eta(\epsilon_j, s_j)$, de $\mathbf{GL}(a'_j,\mathbb{R})$. Soit $P = P_{2a_1,\dots,2a_m,a'_1,\dots,a'_u}$ le sous-groupe parabolique standard de $\mathbf{GL}(n,\mathbb{R})$ associé à la partition (3.2) de n. Son facteur de Levi standard est $M = (\prod_{i=1}^{m} \mathbf{GL}(2a_i,\mathbb{R})) \times \left(\prod_{j=1}^{u} \mathbf{GL}(a'_j,\mathbb{R})\right)$. La représentation $\pi^{\mathbf{GL}}(\psi)$ est alors l'induite parabolique (irréductible) de P à G de la représentation

$$(\boxtimes_{i=1}^{m} \mathbf{Speh}(\delta(s_{i,1}, s_{i,2}), a_i)) \boxtimes \left(\boxtimes_{j=1}^{u} \eta(\epsilon_j, s_j)\right).$$

Le paramètre de Langlands de $\pi^{\mathbf{GL}}(\psi)$ est ϕ_ψ, où ϕ_ψ est le paramètre de Langlands attaché au paramètre d'Arthur ψ (*cf.* [Art84], p. 10).

3.2.2. *Groupes unitaires.* Dans ce paragraphe, G est un groupe unitaire de rang n. Son L-groupe est donc $\mathbf{GL}(n,\mathbb{C}) \ltimes W_{\mathbb{R}}$. Considérons un paramètre d'Arthur pour G :

$$\psi : W_{\mathbb{R}} \times \mathbf{SL}(2,\mathbb{C}) \longrightarrow \mathbf{GL}(n,\mathbb{C}) \ltimes W_{\mathbb{R}}$$

que l'on suppose de bonne parité (*cf.* [MR19], Déf. 2.1). Cela signifie que la restriction de ψ à $W_{\mathbb{C}} \times \mathbf{SL}(2,\mathbb{C})$ (encore notée ψ) est de la forme

$$\psi = \bigoplus_{i=1}^{R} (\chi_{m_i} \boxtimes R[a_i]) \tag{3.3}$$

où $\sum_{i=1}^{R} a_i = n$, $m_i \in \mathbb{Z}$, $a_i \in \mathbb{Z}_{>0}$, $\chi_{m_i}(z) = \left(\frac{z}{\bar{z}}\right)^{\frac{m_i}{2}}$, avec la condition de parité $m_i + a_i \equiv n \mod 2$. On suppose, ce qui est loisible, que les m_i sont rangés dans l'ordre décroissant : $m_1 \geq m_2 \geq \cdots \geq m_R$. Notons qu'il n'existe, à conjugaison par $G^\vee = \mathbf{GL}(n,\mathbb{C})$ près, qu'une seule manière d'étendre (3.3) à $W_{\mathbb{R}}$.

3.2.3. *Groupes symplectiques et orthogonaux.* Si $G = \mathbf{Sp}(2n, \mathbb{R})$, ${}^L G = \mathbf{SO}(2n+1, \mathbb{C}) \times W_{\mathbb{R}}$. Si $G = \mathbf{SO}(p, q)$, $p+q = 2n+1$, ${}^L G = \mathbf{Sp}(2n, \mathbb{C}) \times W_{\mathbb{R}}$. Notons

$$\mathbf{Std}_G : {}^L G \longrightarrow \mathbf{GL}(N, \mathbb{C})$$

la représentation standard de ${}^L G$, avec respectivement $N = 2n+1$ et $N = 2n$. Si $G = \mathbf{SO}(p, q)$ avec $p + q = 2n$, on a alors ${}^L G = \mathbf{SO}(2n, \mathbb{C}) \ltimes W_{\mathbb{R}}$, l'action de $W_{\mathbb{R}}$ sur $\mathbf{SO}(2n, \mathbb{C})$ étant triviale si $n - p \equiv 0 \mod 2$ et si $n - p \equiv 1 \mod 2$, cette action se factorise par $\mathrm{Gal}(\mathbb{C}/\mathbb{R})$, l'élément non trivial agissant par un automorphisme extérieur, réalisé par l'action adjointe d'un élément de $\mathbf{O}(2n, \mathbb{C}) \setminus \mathbf{SO}(2n, \mathbb{C})$, en préservant un épinglage. On a donc dans les deux cas un morphisme

$$\zeta_{SO} : {}^L G = \mathbf{SO}(2n, \mathbb{C}) \ltimes W_{\mathbb{R}} \longrightarrow \mathbf{O}(2n, \mathbb{C}), \tag{3.4}$$

et l'on définit la représentation standard de ${}^L G$ en composant ce morphisme ζ_{SO} avec une réalisation de $\mathbf{O}(2n, \mathbb{C})$ dans $\mathbf{GL}(2n, \mathbb{C})$: $\mathbf{Std}_G : {}^L G \longrightarrow \mathbf{GL}(2n, \mathbb{C})$. On pose dans ce cas $N = 2n$.

Soit G l'un de ces groupes classiques. Composons un paramètre d'Arthur pour G,

$$\psi : W_{\mathbb{R}} \times \mathbf{SL}(2, \mathbb{C}) \longrightarrow {}^L G$$

avec la représentation standard de ${}^L G$, $\mathbf{Std}_G : {}^L G \longrightarrow \mathbf{GL}(N, \mathbb{C})$. Notons encore ψ cette composition. On dit que ψ est de bonne parité si ψ se décompose sous la forme :

$$\psi = \bigoplus_{i=1}^{R} \left(\delta \left(\frac{m_i}{2}, -\frac{m_i}{2} \right) \boxtimes R[a_i] \right) \oplus \bigoplus_{j=1}^{S} \left(\mathbf{sgn}_{W_{\mathbb{R}}}^{b_j} \boxtimes R[c_j] \right), \tag{3.5}$$

où $m_i \in \mathbb{Z}_{>0}$, $a_i \in \mathbb{Z}_{>0}$, $2\sum_{i=1}^{R} a_i + \sum_{j=1}^{S} c_j = N$, avec selon le type de groupe, les conditions de parité suivantes :
• $G = \mathbf{Sp}(2n, \mathbb{R}) : m_i + a_i \equiv 1 \mod 2\, (i = 1, \ldots, R)$,
$c_j \equiv 1 \mod 2$, $(j = 1, \ldots, S)$,
$\sum_{j=1}^{s} b_j \equiv f \mod 2$, où f est le nombre de a_i impairs.
• $G = \mathbf{SO}(p, q)$, $p + q = 2n + 1 : m_i + a_i \equiv 0 \mod 2\, (i = 1, \ldots, R)$,
$c_j \equiv 0 \mod 2$, $(j = 1, \ldots, S)$,
• $G = \mathbf{SO}(p, q)$, $p + q = 2n : m_i + a_i \equiv 1 \mod 2\, (i = 1, \ldots, R)$,
$c_j \equiv 1 \mod 2$, $(j = 1, \ldots, S)$.
$\sum_{j=1}^{s} b_j \equiv f + n - p \mod 2$, où f est le nombre de a_i impairs.

3.3. *Séries discrètes de $\mathcal{X}$ et leur paramètre.* Reprenons les notations des sections 2.1 et 2.4 relatives à un espace symétrique $\mathcal{X}$ admettant des séries discrètes. On a donc un sous-espace de Cartan compact $\mathfrak{t}_0$ et un c-Levi $L = N_G(\mathfrak{t}_0)$ dont le complexifié est $\mathbf{L} = N_{\mathbf{G}}(\mathfrak{t}_0)$. Les séries discrètes de $\mathcal{X}$ sont des modules $A_{\mathfrak{q}}(\pi_L)$ où $\mathfrak{q}$ est une sous-algèbre parabolique θ-stable de $\mathfrak{g}$ et π_L une représentation de L vérifiant les hypothèses de la définition 2.4. Lorsque G est un groupe classique (c'est-à-dire dans cet article, un groupe

général linéaire, un groupe unitaire, un groupe symplectique ou un groupe spécial orthogonal), les résultats de [MR20] et [MR19] montrent que l'on a le résultat suivant, déjà bien connu dans le cas des groupes linéaires généraux.

PROPOSITION 3.1. *Soit $\mathcal{L}$ le sous-groupe de Levi dual de $\mathbf{L}$ dans $G^\vee$. Soit π une série discrète de $\mathcal{X}$. Alors π est contenue dans un paquet d'Arthur de paramètre*

$$\psi_\pi : W_{\mathbb{R}} \times \mathbf{SL}(2,\mathbb{C}) \longrightarrow {}^L G$$

tel que la restriction de ψ_π à $\mathbf{SL}(2,\mathbb{C})$ soit à conjugaison près le morphisme de Jacobson-Morozov associé à l'orbite unipotente régulière de $\mathcal{L}$.

Dans chaque cas de la liste, les sous-groupe de Levi $\mathbf{L}$ et $\mathcal{L}$ sont donnés dans la section 4. La forme réelle explicite L de $\mathbf{L}$ est plus délicate à déterminer. Les calculs, un peu fastidieux, sont données dans la section 9 et les résultats sont résumés dans la table 2. La restriction de ψ_π à $\mathbf{SL}(2,\mathbb{C})$ est donc déterminée (à conjugaison près). On procède alors cas par cas.

3.4. *Le cas 1: $\mathcal{X} = \mathbf{GL}(n,\mathbb{R})/\mathbf{GL}(p,\mathbb{R}) \times \mathbf{GL}(n-p,\mathbb{R})$, $2p \leq n$.* Nous allons montrer le résultat suivant.

PROPOSITION 3.2. *Soit π une série discrète de $\mathcal{X}$. Alors il existe des séries discrètes $(\delta_i)_{i=1,\dots,p}$ de $\mathbf{GL}(2,\mathbb{R})$ de caractère central trivial et toutes distinctes, telles que la représentation π soit obtenue par l'induction parabolique à partir de la représentation $(\bigotimes_{i=1}^p \delta_i) \otimes \mathbf{Triv}_{\mathbf{GL}(n-2p,\mathbb{R})}$ d'un sous-groupe de Levi standard $M = \mathbf{GL}(2,\mathbb{R})^p \times \mathbf{GL}(n-2p,\mathbb{R})$ de $\mathbf{GL}(n,\mathbb{R})$.*

Avant de démontrer cette proposition, on en tire le corollaire suivant, conséquence du fait que pour $\mathbf{GL}(n,\mathbb{R})$, le paramètre d'Arthur est facilement obtenu à partir du paramètre de Langlands (voir section 3.2.1).

COROLLAIRE 3.3. *Le paramètre d'Arthur d'une série discrète π de $\mathcal{X}$ réalisée par induction parabolique comme dans la proposition est*

$$\psi_\pi = \bigoplus_{i=1}^{p} (\delta_i \boxtimes R[1]) \oplus (\mathbf{Triv}_{W_{\mathbb{R}}} \boxtimes R[n-2p]),$$

où les δ_i, $i = 1,\dots,p$ sont ici les représentations de dimension deux de $W_{\mathbb{R}}$ qui paramètrent les séries discrètes de $\mathbf{GL}(2,\mathbb{R})$ notées de la même façon. De plus, ces séries discrètes sont de caractère central trivial et les δ_i sont donc à valeurs dans $\mathbf{SL}(2,\mathbb{C}) \times W_{\mathbb{R}}$ c'est-à-dire (avec les notations de 3.2.1), $\delta_i = \delta\left(\frac{m_i}{2}, -\frac{m_i}{2}\right)$, avec les m_i entiers impairs.

Démonstration de la proposition. On sait par la proposition 3.1 ci-dessus, et le fait que $\mathcal{L} \simeq \mathbf{GL}(1,\mathbb{C})^{2p} \times \mathbf{GL}(n-2p,\mathbb{C})$ que le paramètre d'Arthur ψ_π ci-dessus a pour restriction à $\mathbf{SL}(2,\mathbb{C})$ le morphisme de Jacobson-Morozov

correspondant à l'élément unipotent régulier de $\mathcal{L}$. Ainsi ψ_π est nécessairement de la forme:

$$\psi_\pi = (\phi_d \boxtimes R[1]) \oplus (\eta(\epsilon, s) \boxtimes R[n-2p]),$$

où $\epsilon \in \{0,1\}$ et où ϕ_d est un morphisme tempéré de $W_\mathbb{R}$ à valeurs dans $\mathbf{GL}(2p,\mathbb{C}) \times W_\mathbb{R}$. On commence par montrer que ce morphisme tempéré est en fait une somme de séries discrètes.

Ici, exceptionnellement on utilise l'induction cohomologique comme Vogan l'a normalisée dans [Vog86]. L'avantage majeur est que cette induction cohomologique commute à l'induction parabolique ([Vog86], Theorem 17.6). On sait a priori que $\pi = \widetilde{A}_\mathfrak{q}(\tilde{\pi}_L)$, les $\tilde{}$ étant mis ici pour distinguer cette induction cohomologique normalisée de celle utilisée précédemment. Ici $L \simeq (\mathbb{C}^\times)^p \times \mathbf{GL}(n-2p,\mathbb{R})$ (voir section 9). Via cet isomorphisme, le caractère unitaire $\tilde{\pi}_L$ de L est donné par des caractères unitaires χ_i, $i = 1,\dots,p$ de $\mathbb{C}^\times$ et d'un caractère unitaire η de $\mathbf{GL}(n-2p,\mathbb{R})$. La condition (i) de la définition 2.4 implique que η est le caractère trivial ou le signe du déterminant et que chaque caractère χ_i est de la forme $\chi_i(z) = (z/\bar{z})^{m_i/2}$ où les m_i sont entiers.

La condition de fair range sur l'induite cohomologique $\pi = \widetilde{A}_\mathfrak{q}(\tilde{\pi}_L)$ s'exprime (pour un bon choix de $\mathfrak{q}$, mais pour $G = \mathbf{GL}(n,\mathbb{R})$ tous les choix sont conjugués sous K, et ce choix n'a donc aucune conséquence) par $m_1 > \cdots > m_p > 0$. En notant $\delta_i = \delta\left(\frac{m_i}{2}, -\frac{m_i}{2}\right)$ (notations de 3.2.1), la commutation de l'induction cohomologique et de l'induction parabolique dit que π est obtenu par induction parabolique à partir de la représentation $(\bigotimes_{i=1}^p \delta_i) \otimes (\mathbf{sgn}(\det))^\epsilon$ du sous-groupe de Levi standard $M = \mathbf{GL}(2,\mathbb{R})^p \times \mathbf{GL}(n-2p,\mathbb{R})$ de G. Ici $\epsilon \in \{0,1\}$. On veut maintenant montrer pour terminer la démonstration que les m_i sont tous impairs et que $\epsilon = 0$. Le caractère infinitésimal est dans un système de coordonnées bien choisi

$$\left(\frac{m_1}{2}, \cdots, \frac{m_p}{2}, \frac{n-2p-1}{2}, \cdots, -\frac{n-2p-1}{2}, -\frac{m_p}{2} \cdots, -\frac{m_1}{2}\right).$$

Le K-type minimal de π est donné par Vogan en [Vog86], 6.5 (a) et (6.12) et l'on voit que ce K-type minimal est la représentation de $K = \mathbf{O}(n,\mathbb{R})$ de plus haut poids

$$(2m_1+1, \cdots, 2m_p+1, \underbrace{0, \cdots, 0}_{[n/2]-p})_z,$$

où z est relié à ϵ de la façon suivante: si n est impair z se calcule avec le caractère central de π et si n est pair $z = 0$ si et seulement si $\epsilon = 0$. On renvoie à [Vog86] pour les notations ci-dessus concernant les représentations des groupes orthogonaux.

On exploite maintenant le fait que π est une série discrète de $\mathcal{X}$ et donc que son K-type minimal a des invariants sous $K \cap H$ (condition (iii) de la

définition 2.4) c'est-à-dire sous $\mathbf{O}(p)\times\mathbf{O}(n-p)$. On utilise d'abord la condition (i) de [Sch83] page 138, qui donne que les m_i sont tous de même parité. Le vecteur de plus haut poids doit être invariant sous $\mathbf{O}(1)^p \times \mathbf{O}(n-2p)$ ce qui force d'abord les $m_i + 1$ à être pairs. Ensuite si n est pair et $n > 2p$, par définition de z, l'invariance sous $\mathbf{O}(n-2p)$ force $z = 0$. Si n est impair, le caractère central est précisément z et doit être trivial, d'où encore $z = 0$. Ainsi on a bien montré que les m_i sont des entiers impairs et les δ_i sont des séries discrètes de $\mathbf{GL}(2,\mathbb{R})$ de caractère central trivial. On a aussi montré que $\epsilon = 0$ si n est pair et si n est impair cela est forcé par le calcul du caractère central. □

Remarque 3.4. Il est aussi possible de donner la fin de la démonstration sans recourir à l'induction cohomologique subtilement normalisée de [Vog86]. On écrit comme dans les autres cas $\pi = A_{\mathfrak{q}}(\pi_L)$ avec l'induction cohomologique usuelle, et on traduit la condition $(iii b)$ de la proposition 2.5 en une condition sur π_L en calculant explicitement le caractère $\bigwedge^{\mathrm{top}}(\mathfrak{u}\cap\mathfrak{p})$ de $L\cap K\cap H$. Ceci fait apparaître un facteur $\mathbf{sgn}(\det)^p$ sur le facteur $\mathbf{GL}(n-2p,\mathbb{R})$ qui disparait lorqu'on prend en compte la non commutativité de l'induction parabolique et de l'induction cohomologique pour calculer le paramètre de Langlands de π.

Ecrivons de manière explicite le paramètre ψ_π obtenu :

$$\psi_\pi = \bigoplus \left(\delta\left(\frac{m_i}{2}, -\frac{m_i}{2}\right) \boxtimes R[1]\right) \oplus \left(\mathbf{Triv}_{W_{\mathbb{R}}} \boxtimes R[n-2p]\right). \tag{3.6}$$

avec les m_i entiers impairs distincts.

Remarque 3.5. Il est vraisemblable que les paramètres similaires mais avec des m_i pairs ou bien une partie unipotente $\mathbf{sgn}_{W_{\mathbb{R}}} \boxtimes R[n-2p]$ pourraient apparaître dans le cas des conjectures généralisées avec un caractère χ de H/H_e non trivial.

3.5. *Le cas 2:* $\mathcal{X} = \mathbf{U}(p,q)/\mathbf{O}(p,q)$, $n = p+q$. Dans ce cas, le groupe L est un tore compact, et les séries discrètes de $\mathcal{X}$ sont des séries discrètes de $G = \mathbf{U}(p,q)$. La restriction des paramètres ψ_π à $\mathbf{SL}(2,\mathbb{C})$ est donc triviale et avec les notations de (3.3),

$$\psi_\pi = \bigoplus_{i=1}^{n} (\chi_{m_i} \boxtimes R[1]) \tag{3.7}$$

où $m_i \in \mathbb{Z}$, $\chi_{m_i}(z) = \left(\frac{z}{\bar{z}}\right)^{\frac{m_i}{2}}$, avec la condition de parité $m_i \equiv n-1 \mod 2$.

3.6. *Le cas 3:* $\mathcal{X} = \mathbf{U}(p,q)/\mathbf{U}(r,s)\times\mathbf{U}(r',s')$, $r\le r'$, $s\le s'$. On a ici

$$L = \mathbf{U}(1)^{2(r+s)} \times \mathbf{U}(r'-r, s'-s).$$

Si $\pi = A_{\mathfrak{q}}(\pi_L)$ est une série discrète de $\mathcal{X}$, alors son paramètre ψ_π est de la forme

$$\psi_\pi = \bigoplus_{i=1}^{2(r+s)} (\chi_{m_i} \boxtimes R[1]) \oplus (\chi_{m_0} \boxtimes R[n-2(r+s)])$$

où les χ_i sont comme dans (3.3), pour certains entiers m_i non nuls.

Voyons maintenant ce que donne la condition (i) de la définition 2.4. Comme $L \cap K$ est ici un produit de groupes unitaires, donc connexes, le caractère π_L doit être trivial sur $L \cap H$.

Le groupe $L \cap H$ contient le facteur $\mathbf{U}(p-2r, q-2s)$. La restriction de π_L à ce facteur doit donc être triviale, ce qui implique d'après [MR19] que $m_0 = 0$. La forme des caractères unitaires de L triviaux sur $L \cap H$ (voir section 9, le calcul en rang un du cas 3) montre alors que les m_i se regroupent par paires m_i, $-m_i$ et ils sont entiers, de la parité de $n-1$. Pour conclure, le paramètre ψ_π est de la forme

$$\psi_\pi = \bigoplus_{i=1}^{r+s} ((\chi_{m_i} \oplus \chi_{-m_i}) \boxtimes R[1]) \oplus (\chi_0 \boxtimes R[n-2(r+s)]) \tag{3.8}$$

où les m_i sont entiers, de la parité de $n-1$.

3.7. *Le cas 4:* $\mathcal{X} = \mathbf{U}(n,n)/\mathbf{GL}(n,\mathbb{C})$. On a ici $L = (\mathbf{U}(1) \times \mathbf{U}(1))^n$. C'est donc un tore compact. Si $\pi = A_{\mathfrak{q}}(\pi_L)$ est une série discrète de $\mathcal{X}$, alors son paramètre ψ_π est de la forme

$$\psi_\pi = \bigoplus_{i=1}^{2n} (\chi_{m_i} \boxtimes R[1])$$

où les χ_i sont comme dans (3.3), pour certains entiers m_i non nuls. Le groupe $L \cap H$ est isomorphe à $\mathbf{U}(1)^n$ ou chaque facteur $\mathbf{U}(1)$ se plonge dans le facteur $\mathbf{U}(1) \times \mathbf{U}(1)$ comme expliqué dans la section 9. Comme dans le cas précédent, la condition (i) nous dit alors que les m_i se regroupent par paires m_i, $-m_i$ et ils sont entiers, de la parité de $n-1$. On a donc finalement

$$\psi_\pi = \bigoplus_{i=1}^{n} ((\chi_{m_i} \oplus \chi_{-m_i}) \boxtimes R[1]) \tag{3.9}$$

avec les m_i entiers impairs.

3.8. *Le cas 5:* $\mathbf{U}(2p,2q)/\mathbf{Sp}(p,q)$. On a ici $L = \mathbf{U}(2,0)^p \times \mathbf{U}(0,2)^q$. Si $\pi = A_{\mathfrak{q}}(\pi_L)$ est une série discrète de $\mathcal{X}$, alors son paramètre ψ_π est de la forme

$$\psi_\pi = \bigoplus_{i=1}^{n} (\chi_{m_i} \boxtimes R[2]) \tag{3.10}$$

et les m_i sont ici pairs car $n = 2p + 2q$ est pair.

3.9. *Le cas 6:* $\mathbf{U}(n,n)/\mathbf{Sp}(2n,\mathbb{R})$. On a ici $L=\mathbf{U}(1,1)^n$. Si $\pi=A_{\mathfrak{q}}(\pi_L)$ est une série discrète de $\mathcal{X}$, alors son paramètre ψ_π est de la forme

$$\psi_\pi=\bigoplus_{i=1}^{n}(\chi_{m_i}\boxtimes R[2]) \tag{3.11}$$

et les m_i sont ici pairs car $2n$ est pair.

3.10. *Le cas 7:* $\mathbf{SO}(p,q)/\mathbf{SO}(r,s)\times\mathbf{SO}(r',s')$, $p+q=2n+1$, $r+r'=p$, $s+s'=q$, $r\leq r'$, $s\leq s'$. On a ici $L=\mathbf{U}(1,0)^r\times\mathbf{U}(0,1)^s\times\mathbf{SO}(p-2r,q-2s)$. Si $\pi=A_{\mathfrak{q}}(\pi_L)$ est une série discrète de $\mathcal{X}$, alors son paramètre ψ_π est de la forme

$$\psi_\pi=\bigoplus_{i=1}^{r+s}\left(\delta\left(\frac{m_i}{2},-\frac{m_i}{2}\right)\boxtimes R[1]\right)\oplus\left(\mathbf{sgn}^{\epsilon}_{W_{\mathbb{R}}}\boxtimes R[2(n-r-s)]\right).$$

où les m_i sont impairs et $\epsilon\in\{\pm1\}$. Montrons que de plus $\epsilon=0$.

Notons $L_0=\mathbf{SO}(p-2r,q-2s)$ le facteur spécial orthogonal de L. Notons η_{SO} le caractère non trivial d'un groupe orthogonal $\mathbf{SO}(k,\ell)$ non connexe, c'est-à-dire avec $k\ell\neq0$ (si $k\ell=0$, $\mathbf{SO}(k,\ell)$ est connexe et η_{SO} est alors par convention le caractère trivial). Utilisons maintenant la condition (*iii*) (ou de manière équivalente (*iiib*)) de la définition 2.4. On peut conclure de deux manières. Il découle de [MR20] que l'élément $\pi=A_{\mathfrak{q}}(\pi_L)$ est de restriction η_{SO}^{ϵ} au facteur L_0. La condition (*iiib*) nous dit que l'on veut que $\pi_L\otimes\bigwedge^{\mathrm{top}}(\mathfrak{u}\cap\mathfrak{p})$ soit trivial sur $L\cap H\cap K$. Or un calcul explicite de $\bigwedge^{\mathrm{top}}(\mathfrak{u}\cap\mathfrak{p})$ (qui nécessite d'introduire beaucoup de notations, en particulier des systèmes de racines explicites, et qui de fait est le calcul fait dans l'appendice de [MR20] pour prouver l'assertion précédente) montre que $L\cap K\cap H$ agit trivialement sur cet espace. Ainsi la restriction de π_L à $L\cap H\cap K$ doit être triviale, et ceci impose $\epsilon=0$. L'autre manière consiste à utiliser [SV80], Thm. 4.23, qui donne le lien entre paramètre de Langlands et le K-type minimal de plus haut poids $\pi_L\otimes\bigwedge^{\mathrm{top}}(\mathfrak{u}\cap\mathfrak{p})$ du module π. La forme de ce paramètre de Langlands imposé par la condition (*iii*) montre alors directement que l'on doit avoir $\epsilon=0$ dans le paramètre d'Arthur ψ_π ci-dessus. Finalement, on a obtenu :

$$\psi_\pi=\bigoplus_{i=1}^{r+s}\left(\delta\left(\frac{m_i}{2},-\frac{m_i}{2}\right)\boxtimes R[1]\right)\oplus\left(\mathbf{Triv}_{W_{\mathbb{R}}}\boxtimes R[2(n-r-s)]\right). \tag{3.12}$$

3.11. *Le cas 8:* $\mathbf{SO}(p,q)/\mathbf{SO}(r,s)\times\mathbf{SO}(r',s')$, $p+q=2n$, $r+r'=p$, $s+s'=q$, $r\leq r'$, $s\leq s'$. On a ici $L=\mathbf{U}(1,0)^r\times\mathbf{U}(0,1)^s\times\mathbf{SO}(p-2r,q-2s)$. Si $\pi=A_{\mathfrak{q}}(\pi_L)$ est une série discrète de $\mathcal{X}$, alors son paramètre ψ est de la forme

$$\psi_\pi=\bigoplus_{i=1}^{r+s}\left(\delta\left(\frac{m_i}{2},-\frac{m_i}{2}\right)\boxtimes R[1]\right)\oplus(\eta_1\boxtimes R[2(n-r-s)-1])\oplus(\eta_2\boxtimes R[1]) \tag{3.13}$$

où les m_i sont pairs. Le même argument utilisant la condition (*iii*) ou (*iiib*) de la définition 2.4 donne ici $\eta_1, \eta_2 \in \{\mathbf{Triv}_{W_\mathbb{R}}, \mathbf{sgn}_{W_\mathbb{R}}\}$ avec $\eta_1\eta_2 = \mathbf{sgn}_{W_\mathbb{R}}$ si p et q sont de la parité de n, $\eta_1\eta_2 = \mathbf{Triv}_{W_\mathbb{R}}$ si p et q sont de la parité de $n-1$.

3.12. *Le cas 9:* $\mathbf{SO}(2p,2q)/\mathbf{U}(p,q)$. On a ici $L = \mathbf{U}(2,0)^{p/2} \times \mathbf{U}(0,2)^{q/2}$ si p et q sont pairs et $\mathbf{U}(2,0)^{p/2} \times \mathbf{U}(0,2)^{q-1/2} \times \mathbf{SO}(0,2)$ si p est pair et q impair. Si $\pi = A_\mathfrak{q}(\pi_L)$ est une série discrète de $\mathcal{X}$, alors son paramètre ψ_π est de la forme

$$\psi_\pi = \bigoplus_{i=1}^{\frac{n}{2}} \left(\delta\left(\frac{m_i}{2}, -\frac{m_i}{2}\right) \boxtimes R[2]\right) \tag{3.14}$$

si $n = p+q$ est pair et

$$\psi_\pi = \bigoplus_{i=1}^{\frac{n-1}{2}} \left(\delta\left(\frac{m_i}{2}, -\frac{m_i}{2}\right) \boxtimes R[2]\right) \oplus \left(\mathbf{sgn}_{W_\mathbb{R}} \boxtimes R[1]\right) \oplus \left(\mathbf{Triv}_{W_\mathbb{R}} \boxtimes R[1]\right) \tag{3.15}$$

si $n = p+q$ est impair. Dans les deux cas, les m_i sont impairs.

3.13. *Le cas 10:* $\mathbf{SO}(n,n)/\mathbf{GL}(n,\mathbb{R})$. On a ici $L = \mathbf{U}(1,1)^{n/2}$ si n est pair et $L = \mathbf{U}(1,1)^{(n-1)/2} \times \mathbf{SO}(1,1)$ si n est impair. Si $\pi = A_\mathfrak{q}(\pi_L)$ est une série discrète de $\mathcal{X}$, alors son paramètre ψ_π est de la forme

$$\psi_\pi = \bigoplus_{i=1}^{\frac{n}{2}} \left(\delta\left(\frac{m_i}{2}, -\frac{m_i}{2}\right) \boxtimes R[2]\right) \tag{3.16}$$

si n est pair et

$$\psi_\pi = \bigoplus_{i=1}^{\frac{n-1}{2}} \left(\delta\left(\frac{m_i}{2}, -\frac{m_i}{2}\right) \boxtimes R[2]\right) \oplus \left(\mathbf{sgn}^\epsilon_{W_\mathbb{R}} \boxtimes R[1]\right) \oplus \left(\mathbf{sgn}^\epsilon_{W_\mathbb{R}} \boxtimes R[1]\right)$$

si n est impair, avec $\epsilon \in \{0,1\}$. Dans les deux cas les m_i sont impairs. Le même argument utilisant la condition (*iiib*) de la définition 2.4 que dans le cas 7 donne ici $\epsilon = 0$. D'où finalement :

$$\psi_\pi = \bigoplus_{i=1}^{\frac{n-1}{2}} \left(\delta\left(\frac{m_i}{2}, -\frac{m_i}{2}\right) \boxtimes R[2]\right) \oplus \left(\mathbf{Triv}_{W_\mathbb{R}} \boxtimes R[1]\right) \oplus \left(\mathbf{Triv}_{W_\mathbb{R}} \boxtimes R[1]\right) \tag{3.17}$$

3.14. *Le cas 11:* $\mathbf{Sp}(2n,\mathbb{R})/\mathbf{Sp}(2p,\mathbb{R}) \times \mathbf{Sp}(2(n-p),\mathbb{R})$, $2p \leq n$. Soit $\pi = A_\mathfrak{q}(\pi_L)$ une série discrète de $\mathcal{X}$. Comme ici $L = \mathbf{U}(1,1)^p \times \mathbf{Sp}(2(n-2p),\mathbb{R})$, le paramètre ψ_π est de la forme :

$$\psi_\pi = \bigoplus_{i=1}^{p} \left(\delta\left(\frac{m_i}{2}, -\frac{m_i}{2}\right) \boxtimes R[2]\right) \oplus \left(\mathbf{Triv}_{W_\mathbb{R}} \boxtimes R[2n-4p+1]\right), \tag{3.18}$$

où les m_i sont impairs.

3.15. *Le cas 12:* $\mathbf{Sp}(4n,\mathbb{R})/\mathbf{Sp}(2n,\mathbb{C})$. Soit $\pi = A_{\mathfrak{q}}(\pi_L)$ une série discrète de $\mathcal{X}$. Comme on a ici $L = \mathbf{U}(2)^n$, le paramètre ψ_π est de la forme :

$$\psi_\pi = \bigoplus_{i=1}^{n} \left(\delta\left(\frac{m_i}{2}, -\frac{m_i}{2}\right) \boxtimes R[2]\right) \oplus (\mathbf{Triv}_{W_{\mathbb{R}}} \boxtimes R[1]) \tag{3.19}$$

où les m_i sont impairs.

3.16. *Le cas 13:* $\mathcal{X} = \mathbf{Sp}(2n,\mathbb{R})/\mathbf{GL}(n,\mathbb{R})$. Dans ce cas, le groupe L est un tore compact, et les séries discrètes de $\mathcal{X}$ sont des séries discrètes de $G = \mathbf{Sp}(2n,\mathbb{R})$. Si $\pi = A_{\mathfrak{q}}(\pi_L)$ est une série discrète de $\mathcal{X}$, alors son paramètre ψ_π est de la forme

$$\psi_\pi = \bigoplus_{i=1}^{n} \left(\delta\left(\frac{m_i}{2}, -\frac{m_i}{2}\right) \boxtimes R[1]\right) \oplus (\mathbf{sgn}^n_{W_{\mathbb{R}}} \boxtimes R[1]) \tag{3.20}$$

où les m_i sont pairs.

4. Conjectures de Sakellaridis et Venkatesh : première réduction

Soient G, H, $\mathcal{X}$, etc. comme dans la section 2.1. Comme expliqué dans l'introduction Sakellaridis et Venkatesh introduisent dans [SV17] un formalisme du L-groupe associé à l'espace symétrique $\mathcal{X}$. Ces constructions sont précisées par Knop et Schalke dans [KS17]. Donnons des précisions sur leurs constructions. Ils associent d'abord à $\mathcal{X}$ un sous-groupe parabolique noté $\mathbf{P}(\mathcal{X})$ de $\mathbf{G}$ et un facteur de Levi $\mathbf{L}(\mathcal{X})$ de celui-ci. Le sous-groupe $\mathbf{P}(\mathcal{X})$ est un sous-groupe parabolique σ-déployé minimal de $\mathbf{G}$ et $\mathbf{L}(\mathcal{X}) = \mathbf{P}(\mathcal{X}) \cap \sigma(\mathbf{P}(\mathcal{X}))$. Soit $\mathbf{A}$ un tore maximal de $\mathbf{L}(\mathcal{X})$ et posons $\mathbf{A}_{\mathcal{X}} = \mathbf{L}(\mathcal{X})/\mathbf{L}(\mathcal{X}) \cap \mathbf{H} = \mathbf{A}/\mathbf{A} \cap \mathbf{H}$. C'est un tore d'algèbre de Lie $\mathfrak{a}_{\mathcal{X}}$. Il résulte aussi des constructions que les algèbres de Lie $\mathfrak{t}$ et $\mathfrak{a}_{\mathcal{X}}$ sont isomorphes. Ainsi le rang de $\mathcal{X}$ est égal à la dimension de $\mathbf{A}_{\mathcal{X}}$.

Notons $G^\vee$ le groupe dual de $\mathbf{G}$. On fixe une réalisation ${}^L G = G^\vee \ltimes W_{\mathbb{R}}$ du L-groupe de $\mathbf{G}$, l'action de $W_{\mathbb{R}}$ sur $G^\vee$ se factorise par $\mathrm{Gal}(\mathbb{C}/\mathbb{R})$ et préserve un épinglage $(B^\vee, T^\vee, \{\mathcal{X}_\alpha\}_\alpha)$ de $G^\vee$. On fixe aussi un épinglage de $\mathbf{G}$, ce qui nous permet d'identifier racines simples de $\mathbf{G}$ et coracines de $G^\vee$. Le sous-groupe de Levi $\mathbf{L}(\mathcal{X})$ de $\mathbf{G}$ du paragraphe précédent détermine donc via la dualité et le choix des épinglages, un sous-groupe de Levi $\mathbf{L}^\vee_{\mathcal{X}}$ de $G^\vee$. On note

$$\eta_{\mathcal{X}} : \mathbf{SL}(2,\mathbb{C}) \longrightarrow \mathbf{L}^\vee_{\mathcal{X}} \subset G^\vee \tag{4.1}$$

un morphisme de Jacobson-Morosov associé à l'orbite unipotente principale de $\mathbf{L}^\vee_{\mathcal{X}}$.

Supposons que $\mathfrak{X}$ vérifie le critère d'existence de séries discrètes du théorème 2.1

PROPOSITION 4.1. *Les groupes* $\mathbf{L}$ *et* $\mathbf{L}(\mathfrak{X})$ *(identifiés à leur groupes de points complexes) sont conjugués sous* $\mathbf{G}$*. Dualement, les groupes* $\mathcal{L}$ *et* $\mathbf{L}_{\mathfrak{X}}^{\vee}$ *sont donc conjugués dans* $G^{\vee}$*.*

Ceci résulte de la remarque 2.1.1 de [SV17].

Une des conditions portant sur ${}^{L}G_{\mathfrak{X}}$ est que le rang de $G_{\mathfrak{X}}^{\vee}$ est égal à celui de l'espace symétrique $\mathfrak{X}$. D'autre part, si $G_{\mathfrak{X}}^{\vee}$ est déterminé, alors ${}^{L}G_{\mathfrak{X}}$ l'est aussi par le fait que nous voulons l'existence de paramètres de Langlands *discrets* $\phi_d : W_{\mathbb{R}} \to {}^{L}G_{\mathfrak{X}}$. En effet ${}^{L}G_{\mathfrak{X}}$ est alors aussi le L-groupe d'un groupe quasi-déployé admettant des séries discrètes. Or pour un groupe réductif complexe connexe, il n'y a qu'une seule classe de formes réelles quasi-déployées ayant des séries discrètes, celle qui est une forme intérieure de la forme compacte. La structure de produit semi-direct de ${}^{L}G_{\mathfrak{X}}$ est alors fixée par cette condition. Or $G_{\mathfrak{X}}^{\vee}$ a été déterminé par Knop et Schalke. Ceci fixe donc a priori ${}^{L}G_{\mathfrak{X}}$. Comme conséquence de la proposition 3.1 et de la proposition ci-dessus, on obtient le corollaire suivant :

COROLLAIRE 4.2. *Soit* π *une série discrète de* $\mathfrak{X}$*. Alors* π *est contenue dans un paquet d'Arthur de paramètre* ψ_π *tels que la restriction de* ψ *à* $\mathbf{SL}(2,\mathbb{C})$ *soit à conjugaison près le morphisme de Jacobson-Morozov* $\eta_{\mathfrak{X}}$ *associé à l'orbite unipotente régulière de* $\mathbf{L}_{\mathfrak{X}}^{\vee}$*.*

Ce corollaire constitue une étape importante dans la vérification de la conjecture, puisqu'il dit que la restriction de ψ_π à $\mathbf{SL}(2,\mathbb{C})$ est bien obtenue via le morphisme (4.1).

Dans la table 1, on donne dans chacun des 13 cas de la liste donnée dans l'introduction :

— en troisième colonne, les conditions sur les variables définissant $\mathfrak{X}$,

— en quatrième colonne, l'algèbre de Lie $\check{\mathfrak{g}}_X$ du groupe $G_{\mathfrak{X}}^{\vee}$,

— en cinquième colonne, l'algèbre de Lie $\check{\mathfrak{l}}_X$ du groupe $\mathbf{L}_{\mathfrak{X}}^{\vee}$.

— en sixième colonne le groupe ${}^{L}G_{\mathfrak{X}}$ (sauf dans le cas 3, n impair, qui fera l'objet d'une discussion spéciale).

Les colonnes 4 et 5 sont issues de la table 3 de [KS17], le L-groupe ${}^{L}G_{\mathfrak{X}}$ est déterminé par les considérations ci-dessus.

REMARQUE 4.3. L'algèbre de Lie $\check{\mathfrak{l}}_X$ détermine le groupe des points complexes $\mathbf{L}$ du c-Levi L de G introduit dans la section 2.4. En effet, le groupe $\mathbf{L}_{\mathfrak{X}}^{\vee}$ est dual du groupe $\mathbf{L}(\mathfrak{X})$, ce dernier étant conjugué dans $\mathbf{G}$ à $\mathbf{L}$ (remarque 4.1). L'inspection de la liste montre que $\check{\mathfrak{l}}_X$ est toujours un produit de $\mathfrak{gl}$ de rang un ou deux et d'une algèbre de Lie classique de même type que $\check{\mathfrak{g}}$.

5. Plongements de L-groupes

Dans cette section, nous construisons des L-morphismes qui nous seront utiles dans la suite de cet article, ou éventuellement dans un article ultérieur portant sur la généralisation des conjectures de Sakellaridis et Venkatesh lorsque l'on considère un caractère χ de H/H_e non trivial.

5.1. *Plongements* $\mathbf{Sp}(2p,\mathbb{C})\times W_{\mathbb{R}}\longrightarrow {}^L\mathbf{U}_n$ *et* $\mathbf{SO}(2p,\mathbb{C})\ltimes_p W_{\mathbb{R}}\longrightarrow {}^L\mathbf{U}_n$. On note ${}^L\mathbf{U}_n=\mathbf{GL}(n,\mathbb{C})\ltimes W_{\mathbb{R}}$ le L-groupe d'un groupe unitaire de rang n. Donnons une réalisation explicite de ce L-groupe. Il s'agit de définir l'action de $W_{\mathbb{R}}$ sur $\mathbf{GL}(n,\mathbb{C})$. Cette action se factorise par la projection de $W_{\mathbb{R}}$ sur $\mathrm{Gal}(\mathbb{C}/\mathbb{R})$ et l'on choisit l'action de l'élément non trivial de ce groupe de Galois préservant l'épinglage usuel, à savoir $g\mapsto w_n({}^tg^{-1})w_n^{-1}$, où $w_n=\begin{pmatrix} \dots & & \dots & 1\\ \dots & & -1 & \\ & \iddots & & \\ & \dots & & \\ (-1)^{n-1} & \dots & & \end{pmatrix}$. Remarquons que ${}^tw_n=w_n^{-1}=w_n$ si n est impair et ${}^tw_n=w_n^{-1}=-w_n$ si n est pair.

De même, donnons une réalisation explicite du L-groupe d'un groupe spécial orthogonal pair ayant une série discrète, c'est-à-dire un $\mathbf{SO}(p,q)$, $p+q=2n$, p et q pairs. Notons $\mathbf{SO}(2n,\mathbb{C})\ltimes_n W_{\mathbb{R}}$ ce L-groupe. Cette action se factorise par la projection de $W_{\mathbb{R}}$ sur $\mathrm{Gal}(\mathbb{C}/\mathbb{R})$, l'action de l'élément non trivial de ce groupe de Galois étant $g\mapsto TgT^{-1}$, où $T=T_{2n}$ est la matrice diagonale ayant des coefficients 1 et -1 qui alternent. Cette conjugaison est un automorphisme intérieur si n est pair, et extérieur si n est impair. Remarquons que cette construction donne naturellement un morphisme

$$\mathbf{SO}(2n,\mathbb{C})\ltimes_n W_{\mathbb{R}}\longrightarrow \mathbf{O}(2n,\mathbb{C}). \tag{5.1}$$

Pour tout entier m, et tout nombre complexe z, on a posé $\chi_m(z)=\left(\frac{z}{\bar z}\right)^{\frac{m}{2}}=z^m(z\bar z)^{-\frac{m}{2}}$.

Proposition 5.1. *Fixons des entiers n, p, a, a' et b tels que $n\geq 2p$, $b\equiv 0 \mod 2$, $a\equiv n \mod 2$ et $a'\equiv n-1 \mod 2$.*

(i) Il existe une inclusion de L-groupes $\xi_{Sp}:\mathbf{Sp}(2p,\mathbb{C})\times W_{\mathbb{R}}\longrightarrow {}^L\mathbf{U}_n$ dont la restriction à $W_{\mathbb{C}}=\mathbb{C}^\times$ est donnée à conjugaison près par : $z\mapsto(\underbrace{\chi_a(z),\cdots,\chi_a(z)}_{2p},\underbrace{\chi_b(z),\cdots,\chi_b(z)}_{n-2p})$.

(ii) Il existe une inclusion de L-groupes $\xi_{SO}:\mathbf{SO}(2p,\mathbb{C})\ltimes_p W_{\mathbb{R}}\longrightarrow {}^L\mathbf{U}_n$ dont la restriction à $W_{\mathbb{C}}=\mathbb{C}^\times$ est donnée à conjugaison près par : $z\mapsto(\underbrace{\chi_{a'}(z),\cdots,\chi_{a'}(z)}_{2p},\underbrace{\chi_b(z),\cdots,\chi_b(z)}_{n-2p})$.

Démonstration. Le (i) est classique, on remarque que la matrice w_{2p} qui définit la réalisation de ${}^L\mathbf{U}_{2p}$ donnée ci-dessus est antisymétrique. L'automorphisme $g \mapsto w_{2p}{}^t g^{-1} w_{2p}^{-1}$ de $\mathbf{GL}(2p,\mathbb{C})$ a donc pour groupe des points fixes un groupe symplectique, que nous choisissons ici comme réalisation du groupe $\mathbf{Sp}(2p,\mathbb{C})$. On prolonge cette inclusion de $\mathbf{Sp}(2p,\mathbb{C})$ dans $\mathbf{GL}(2p,\mathbb{C})$ par l'identité sur le facteur $W_{\mathbb{R}}$ pour obtenir une injection $\mathbf{Sp}(2p,\mathbb{C}) \hookrightarrow {}^L\mathbf{U}_{2p}$. Ensuite, on envoie ${}^L\mathbf{U}_{2p}$ dans ${}^L(\mathbf{U}_{2p} \times \mathbf{U}_{n-2p})$ naturellement sur le premier facteur puis ${}^L(\mathbf{U}_{2p} \times \mathbf{U}_{n-2p})$ dans ${}^L\mathbf{U}_n$ en utilisant les entiers a et b (*cf.* [Wal10]).

Pour (ii), commençons par le cas où n est impair. On réalise $\mathbf{O}(2p,\mathbb{C})$ comme un sous-groupe de $\mathbf{GL}(n,\mathbb{C})$ de la manière suivante : considérons la matrice $J_{n,p} = \left(\begin{array}{c|c|c} 0 & 0 & w_p \\ \hline 0 & I_{n-2p} & 0 \\ \hline {}^t w_p & 0 & 0 \end{array}\right)$ qui est symétrique dans $\mathbf{GL}(n,\mathbb{C})$ et réalisons $\mathbf{O}(2p,\mathbb{C})$ comme le sous-groupe des matrices g de $\mathbf{GL}(n,\mathbb{C})$ de la forme $g = \left(\begin{array}{c|c|c} A & 0 & B \\ \hline 0 & I_{n-2p} & 0 \\ \hline C & 0 & D \end{array}\right)$ telles que $g = J_{n,p}{}^t g^{-1} J_{n,p}^{-1}$. Comme $w_n = \left(\begin{array}{c|c|c} 0 & 0 & w_p \\ \hline 0 & (-1)^p w_{n-2p} & 0 \\ \hline {}^t w_p & 0 & 0 \end{array}\right)$, il est clair que $\mathbf{O}(2p,\mathbb{C})$ ainsi réalisé est inclu dans le groupe des points fixes de l'automorphisme $g \mapsto w_n{}^t g^{-1} w_n^{-1}$ de $\mathbf{GL}(n,\mathbb{C})$. En particulier $\mathbf{O}(2p,\mathbb{C})$ commute à ${}^L\mathbf{U}_{n-2p} = \mathbf{GL}(n-2p,\mathbb{C}) \ltimes W_{\mathbb{R}}$ réalisé dans le bloc central, et l'on a donc une inclusion

$$\iota : \mathbf{O}(2p,\mathbb{C}) \times {}^L\mathbf{U}_{n-2p} \hookrightarrow \mathbf{GL}(n,\mathbb{C}) \ltimes W_{\mathbb{R}}.$$

L'entier $b-a'$ est pair et définit un isomorphisme $\xi_{b-a'} : {}^L\mathbf{U}_{n-2p} \to {}^L\mathbf{U}_{n-2p}$ et de même pour a' et ${}^L\mathbf{U}_n$ qui donne un isomorphisme $\xi_{a'} : {}^L\mathbf{U}_n \to {}^L\mathbf{U}_n$ (par torsion respectivement par le caractère de $W_{\mathbb{R}}$ qui paramètre le caractère $\det^{\frac{b-a'}{2}}$ de $\mathbf{U}_{n-2p}$ et $\det^{\frac{a'}{2}}$ de ${}^L\mathbf{U}_n$, voir [Wal10]). On étend ainsi l'inclusion $\mathbf{O}(2p,\mathbb{C}) \hookrightarrow \mathbf{GL}(n,\mathbb{C})$ en tordant ι à la source et au but :

$$\mathbf{O}(2p,\mathbb{C}) \times {}^L\mathbf{U}_{n-2p} \xrightarrow{\mathrm{Id}\times\xi_{b-a'}} \mathbf{O}(2p,\mathbb{C}) \times {}^L\mathbf{U}_{n-2p} \longrightarrow {}^L\mathbf{U}_n \xrightarrow{\xi_{a'}} {}^L\mathbf{U}_n,$$

On compose ensuite avec (5.1) pour obtenir le morphisme ξ_{SO} de (ii).

Si n est pair, la construction précédente doit être légèrement modifiée. A la place de $J_{n,p}$ on prend la matrice $J'_{n,p}$ qui est antidiagonale avec tous les coefficients égaux à 1. On réalise alors $\mathbf{O}(2p,\mathbb{C})$ dans $\mathbf{GL}(n,\mathbb{C})$ avec la même recette, $J'_{n,p}$ remplaçant $J_{n,p}$. Posons $T'_{2p} = \left(\begin{array}{c|c|c} 0 & 0 & w_p \\ \hline 0 & I_{n-2p} & 0 \\ \hline -{}^t w_p & 0 & 0 \end{array}\right)$.

Définissons ξ_{SO} sur le facteur $\mathbb{C}^\times$ de $W_{\mathbb{R}}$ par

$$z \mapsto ((\underbrace{\chi_{a'}(z),\cdots,\chi_{a'}(z)}_{p},\underbrace{\chi_b(z),\cdots,\chi_b(z)}_{n-2p},\underbrace{\chi_{a'}(z),\cdots,\chi_{a'}(z)}_{p}),z)$$
$$\in \mathbf{GL}(n,\mathbb{C})\ltimes W_{\mathbb{R}},$$

et sur l'élément j de $W_{\mathbb{R}}$ par $\xi_{SO}(j)=(T'_{2p}w_n,j)$. On vérifie que $\xi_{SO}(j)^2=(1,-1)$, et pour tout $z\in\mathbb{C}^\times$, $\xi_{SO}(j)\xi_{SO}(z)\xi_{SO}(j)^{-1}=\xi_{SO}(\bar z)$. Ainsi on a bien un morphisme de $W_{\mathbb{R}}$ dans ${}^L\mathbf{U}_n$. Il reste à vérifier que l'inclusion, notons-là ι, donnée ci-dessus de $\mathbf{SO}(2p,\mathbb{C})$ dans $\mathbf{GL}(n,\mathbb{C})$ et le morphisme ξ_{SO} défini sur $W_{\mathbb{R}}$ sont compatibles aux relations dans $\mathbf{SO}(2p,\mathbb{C})\ltimes_p W_{\mathbb{R}}$ et ${}^L\mathbf{U}_n$. D'une part, $\xi_{SO}(\mathbb{C}^\times)$ et $\iota(g)$ commutent. D'autre part, on a dans $\mathbf{SO}(2p,\mathbb{C})\ltimes_p W_{\mathbb{R}}$,

$$(1,j)(g,1)(1,j)^{-1}=(T_{2p}gT_{2p}^{-1},1),$$

et ceci s'envoie donc sur $(\iota(T_{2p}gT_{2p}^{-1}),1)$. De plus,

$$\begin{aligned}&\xi_{SO}(j)(\iota(g),1)\xi_{SO}(j)^{-1}=(T'_{2p}w_n,j)(\iota(g),1)(T'_{2p}w_n,j)^{-1}\\&=(T'_{2p}w_n{w_n}^t\iota(g)^{-1}w_n^{-1}(T'_{2p}w_n)^{-1},1)\\&=(T'_{2p}{}^t\iota(g)^{-1}(T'_{2p})^{-1},1)=(T'_{2p}(J'_{n,p})^{-1}\iota(g)J'_{n,p}(T'_{2p})^{-1},1).\end{aligned}$$

En effet ${}^t\iota(g)^{-1}=(J'_{n,p})^{-1}\iota(g)J'_{n,p}$, c'est la réalisation choisie de $\mathbf{SO}(2p,\mathbb{C})$. Il s'agit donc de vérifier que $\iota(T_{2p}gT_{2p}^{-1})=T'_{2p}(J'_{n,p})^{-1}\iota(g)J'_{n,p}(T'_{2p})^{-1}$. Or $T'_{2p}(J'_{n,p})^{-1}$ est la matrice diagonale dont les coefficients sont

$$(\underbrace{1,-1,\ldots,(-1)^{p-1}}_{p},\underbrace{1,\ldots,1}_{n-2p},\underbrace{(-1)^{p-1},(-1)^{p-2},\ldots,-1,-1}_{p})$$

et ι entrelace bien l'action par conjugaison de T_{2p} et de cette matrice. □

5.2. *Commutant de $R[2]\oplus\ldots\oplus R[2]$ dans ${}^L\mathbf{U}_{2n}$.* Plongeons $\mathbf{GL}(n,\mathbb{C})\times\mathbf{SL}(2,\mathbb{C})$ dans $\mathbf{GL}(2n,\mathbb{C})$ en prenant le produit tensoriel des représentations naturelles de ces deux groupes, soit

$$\iota:\mathbf{GL}(n,\mathbb{C})\times\mathbf{SL}(2,\mathbb{C})\to\mathbf{GL}(2n,\mathbb{C}),\quad \left(g,\begin{pmatrix}a&b\\c&d\end{pmatrix}\right)\mapsto\left(\begin{array}{c|c}ag&bg\\\hline cg&dg\end{array}\right).$$

Calculons le commutant $\mathcal{G}$ de $\iota(\mathbf{SL}(2,\mathbb{C}))$ dans ${}^L\mathbf{U}_{2n}$. Le commutant dans $\mathbf{GL}(2n,\mathbb{C})$ est exactement $\iota(\mathbf{GL}(2n,\mathbb{C}))$. On a

$${w_{2n}}^t\iota\left(\begin{pmatrix}a&b\\c&d\end{pmatrix}\right)^{-1}w_{2n}^{-1}=\begin{pmatrix}aI_n&(-1)^{n-1}bI_n\\(-1)^{n-1}cI_n&dI_n\end{pmatrix}$$

et ainsi si n est impair, $\mathcal{G}=\{(\iota(g),w)\in{}^L\mathbf{U}_{2n},\ g\in\mathbf{GL}(n,\mathbb{C}),\ w\in W_{\mathbb{R}}\}$. Ce groupe est le produit semi-direct de $\iota(\mathbf{GL}(n,\mathbb{C}))$ et de $W_{\mathbb{R}}$, où $W_{\mathbb{C}}=\mathbb{C}^\times\subset$

$W_{\mathbb{R}}$ agit trivialement sur $\iota(\mathbf{GL}(n,\mathbb{C}))$ et $W_{\mathbb{R}} \setminus W_{\mathbb{C}}$ agit par l'automorphisme $\iota(g) \mapsto w_{2n}\,{}^t\iota(g)^{-1}w_{2n}^{-1}$. On a un isomorphisme

$$(5.2)\quad (n \text{ impair})\quad \xi_+ : {}^L\mathbf{U}_n \longrightarrow \mathcal{G} \subset {}^L\mathbf{U}_{2n},\quad (g,w) \mapsto \left(\left(\begin{array}{c|c} g & 0 \\ \hline 0 & g \end{array}\right), w\right).$$

Ceci est bien défini car pour tout $g \in \mathbf{GL}(n,\mathbb{C})$, $w_{2n}\,{}^t\iota(g)^{-1}w_{2n}^{-1} = \iota(w_n\,{}^tg^{-1}w_n^{-1})$. En effet, comme $\iota({}^tg^{-1}) = {}^t\iota(g)^{-1}$ pour tout $g \in \mathbf{GL}(n,\mathbb{C})$, il reste à vérifier que $\mathrm{Ad}(w_{2n}^{-1}\iota(w_n))$ agit trivialement sur l'image de ι, ce qui est le cas, car $w_{2n}^{-1}\iota(w_n) = \left(\begin{array}{c|c} 0 & (-1)^nI_n \\ \hline I_n & 0 \end{array}\right)$.

Si n est pair $\mathcal{G} = \left\{(\iota(g)\begin{pmatrix} -I_n & 0 \\ 0 & I_n \end{pmatrix}, w) \in {}^L\mathbf{U}_{2n},\ g \in \mathbf{GL}(n,\mathbb{C}),\ w \in W_{\mathbb{R}}\right\}$.

On a encore un isomorphisme entre ${}^L\mathbf{U}_n$ et $\mathcal{G}$:

$$(5.3)\qquad (n \text{ pair})\quad \xi_- : {}^L\mathbf{U}_n \longrightarrow \mathcal{G} \subset {}^L\mathbf{U}_{2n},\quad (g,w) \mapsto (\iota(g)c(w), w),$$

où $c : W_{\mathbb{R}} \to \mathbf{GL}(2n,\mathbb{C})$ est défini par $c(z) = \left(\frac{z}{\bar{z}}\right)^{\frac{1}{2}} I_{2n}$, $(z \in \mathbb{C})$, $c(j) = \left(\begin{array}{c|c} -I_n & 0 \\ \hline 0 & I_n \end{array}\right)$, $c(zj) = c(z)c(j)$.

6. Le commutant du $\mathbf{SL}(2)$ et le plongement $\varphi_{\mathcal{X}} : {}^LG_{\mathcal{X}} \times \mathbf{SL}(2,\mathbb{C}) \to {}^LG$.

Reprenons les résultats obtenus dans la section 4. Soit π une série discrète d'un espace $\mathcal{X}$ de la liste, et soit ψ_π le paramètre d'Arthur que nous lui associons. D'après le corollaire 4.2, la restriction de ψ_π à $\mathbf{SL}(2,\mathbb{C})$ est (à conjugaison près) le morphisme de Jacobson-Morosov $\eta_{\mathcal{X}}$ associé à l'orbite unipotente régulière du sous-groupe de Levi $\mathbf{L}_{\mathcal{X}}^\vee$ de $G^\vee$. Ce groupe (ou plutôt son algèbre de Lie $\check{\mathfrak{l}}_{\mathcal{X}}$, ce qui le détermine) est donné dans la table 1. Nous allons calculer le commutant $\mathcal{G}$ de cette image de $\mathbf{SL}(2,\mathbb{C})$ dans ${}^LG$. Ceci nous permet de vérifier que le groupe de Langlands dual ${}^LG_{\mathcal{X}}$ prévu par [SV17] et [KS17] est bien le bon, et à terme, de déterminer le morphisme $\varphi_{\mathcal{X}}$ de (1.1) (ou de manière équivalente, puisque la restriction au facteur $\mathbf{SL}(2,\mathbb{C})$ est déjà donnée, le morphisme $\bar{\varphi}_{\mathcal{X}}$ de (1.3)). En effet l'image par ce morphisme de ${}^LG_{\mathcal{X}}$ doit être contenue dans $\mathcal{G}$.

Nous commençons par les cas les plus simples, ceux où le commutant $\mathcal{G}$ est isomorphe au groupe de Langlands dual ${}^LG_{\mathcal{X}}$ prévu par [SV17] et [KS17].

Proposition 6.1. *Dans les cas 2, 5, 6, 9 avec $n = p+q$ pair, 10 avec n pair, 11, 12 et 13 de la table 1, le commutant $\mathcal{G}$ est isomorphe à ${}^LG_{\mathcal{X}}$. Ceci fixe le morphisme $\bar{\varphi}_{\mathcal{X}}$ de (1.3).*

Démonstration. **Cas 2** : $\mathbf{U}(p,q)/\mathbf{O}(p,q)$, $n = p+q$. On a ${}^LG = \mathbf{GL}(n,\mathbb{C}) \ltimes W_{\mathbb{R}}$ et $\mathbf{L}_{\mathcal{X}}^\vee = \mathbf{GL}(1,\mathbb{C})^n$ qui est un tore donc de $\mathbf{SL}(2)$ principal trivial. Le

L-groupe ${}^L G_{\mathcal{X}}$ est égal à ${}^L G$ et le morphisme (1.1) égal à l'identité des deux L-groupes.

Cas 5 : $\mathbf{U}(2p,2q)/\mathbf{Sp}(p,q)$. Posons $n = p+q$. On a ${}^L G = \mathbf{GL}(2n,\mathbb{C}) \ltimes W_{\mathbb{R}}$ et $\mathbf{L}_{\mathcal{X}}^{\vee} = \mathbf{GL}(2,\mathbb{C})^n$. Le commutant $\mathcal{G}$ est isomorphe à ${}^L\mathbf{U}_n = \mathbf{GL}(n,\mathbb{C}) \ltimes W_{\mathbb{R}}$. Les calculs sont donnés dans la section 5.2 où nous définissons un isomorphisme entre ${}^L\mathbf{U}_n$ et $\mathcal{G}$. La forme de cet isomorphisme dépend de la parité de n, il est noté ξ_- si n est pair, et ξ_+ si n est impair. Ainsi ${}^L G_{\mathcal{X}} = \mathbf{GL}(n,\mathbb{C}) \ltimes W_{\mathbb{R}} = {}^L\mathbf{U}_n$, et le morphisme $\bar{\varphi}_{\mathcal{X}}$ de (1.3) est donné par ξ_- ou ξ_+ selon la parité de n.

Cas 6 : $\mathbf{U}(n,n)/\mathbf{Sp}(2n,\mathbb{R})$. Ce cas est identique au précédent

Cas 9 : $\mathbf{SO}(2p,2q)/\mathbf{U}(p,q)$ avec $n = p+q$ pair. L'espace symétrique $\mathcal{X}$ admet des séries discrètes sauf dans le cas où p et q sont tous les deux impairs, donc si $n = p+q$ est pair, p et q sont pairs. Le groupe G est une forme intérieure de $\mathbf{SO}(n,n)$. On a alors ${}^L G = \mathbf{SO}(2n,\mathbb{C}) \times W_{\mathbb{R}}$ et $\mathbf{L}_{\mathcal{X}}^{\vee} = \mathbf{GL}(2,\mathbb{C})^{\frac{n}{2}}$. Le commutant du $\mathbf{SL}(2)$ principal de $\mathbf{L}_{\mathcal{X}}^{\vee}$ dans $\mathbf{GL}(2n,\mathbb{C})$ dans $\mathbf{SO}(2n,\mathbb{C})$ est $\mathbf{Sp}(n,\mathbb{C})$ ([CM93], Thm. 6.1.3). Ceci fixe ${}^L G_{\mathcal{X}} = \mathbf{Sp}(n,\mathbb{C}) \times W_{\mathbb{R}}$. Le commutant $\mathcal{G}$ est donc isomorphe à ${}^L G_{\mathcal{X}} = \mathbf{Sp}(n,\mathbb{C}) \times W_{\mathbb{R}}$ et ceci fixe le morphisme $\bar{\varphi}_{\mathcal{X}}$ de (1.3).

Cas 10 : $\mathbf{SO}(n,n)/\mathbf{GL}(n,\mathbb{R})$ avec $n = p+q$ pair. Ce cas est similaire au cas précédent. Ici ${}^L G = \mathbf{SO}(2n,\mathbb{C}) \times W_{\mathbb{R}}$, et $\mathbf{L}_{\mathcal{X}}^{\vee} = \mathbf{GL}(2,\mathbb{C})^{\frac{n}{2}}$. Le commutant $\mathcal{G}$ du $\mathbf{SL}(2)$-principal de $\mathbf{L}_{\mathcal{X}}^{\vee}$ est $\mathcal{G} = \mathbf{Sp}(n,\mathbb{C}) \times W_{\mathbb{R}}$. Ainsi ${}^L G_{\mathcal{X}} = \mathbf{Sp}(n,\mathbb{C}) \times W_{\mathbb{R}}$ et ceci fixe le morphisme $\bar{\varphi}_{\mathcal{X}}$ de (1.3).

Cas 11: $\mathcal{X} = \mathbf{Sp}(2n,\mathbb{R})/\mathbf{Sp}(2p,\mathbb{R}) \times \mathbf{Sp}(2(n-p),\mathbb{R})$, $2p \leq n$. On a ici

$$ {}^L G = \mathbf{SO}(2n+1,\mathbb{C}) \times W_{\mathbb{R}}, \quad \mathbf{L}_{\mathcal{X}}^{\vee} = \mathbf{GL}(2,\mathbb{C})^p \times \mathbf{SO}(2n-4p+1,\mathbb{C}). $$

Le commutant dans $\mathbf{SO}(2n+1,\mathbb{C})$ du $\mathbf{SL}(2)$ principal de $\mathbf{L}_{\mathcal{X}}^{\vee}$ est $\mathcal{G} = \mathbf{Sp}(2p,\mathbb{C}) \times \{I_{2n-4p+1}\}$ (*cf.* [CM93] Thm. 6.1.3). Ainsi ${}^L G_{\mathcal{X}} = \mathbf{Sp}(2p,\mathbb{C}) \times W_{\mathbb{R}}$ et ceci fixe le morphisme $\bar{\varphi}_{\mathcal{X}}$ de (1.3).

Cas 12: $\mathcal{X} = \mathbf{Sp}(4n,\mathbb{R})/\mathbf{Sp}(2n,\mathbb{C})$. Ce cas est analogue au précédent, en remplaçant $2n$ par $4n$ et p par n.

Cas 13: $\mathcal{X} = \mathbf{Sp}(2n,\mathbb{R})/\mathbf{GL}(n,\mathbb{R})$. On a ${}^L G = \mathbf{SO}(2n+1,\mathbb{C}) \times W_{\mathbb{R}}$ et $\mathbf{L}_{\mathcal{X}}^{\vee} = \mathbf{GL}(1,\mathbb{C})^n$ qui est un tore, donc de $\mathbf{SL}(2)$ principal trivial. Le morphisme $\varphi_{\mathcal{X}}$ de (1.1) est l'identité des L-groupes: ${}^L G_{\mathcal{X}} = \mathbf{SO}(2n+1,\mathbb{C}) \times W_{\mathbb{R}} = {}^L G$. □

PROPOSITION 6.2. *Dans les cas 7 et 8, le commutant $\mathcal{G}$ de l'image de $\mathbf{SL}(2,\mathbb{C})$ dans ${}^L G$ est isomorphe à ${}^L G_{\mathcal{X}} \times \{\pm 1\}$. Le morphisme $\varphi_{\mathcal{X}}$ de (1.1) est alors fixé à une torsion près dans $\{\pm 1\}$.*

Démonstration. **Cas 7** : $\mathbf{SO}(p,q)/\mathbf{SO}(r,s) \times \mathbf{SO}(r',s')$, $p+q = 2n+1$. On pose $m = r+s$. On a ici ${}^L G = \mathbf{Sp}(2n,\mathbb{C}) \times W_{\mathbb{R}}$ et $\mathbf{L}_{\mathcal{X}}^{\vee} = \mathbf{GL}(1,\mathbb{C})^m \times$

$\mathbf{Sp}(2(n-m),\mathbb{C})$. Le commutant du $\mathbf{SL}(2)$ principal de $\mathbf{L}_\chi^\vee$ dans $\mathbf{Sp}(2n,\mathbb{C})$ est $\mathbf{Sp}(2m,\mathbb{C}) \times \{\pm I_{2n-2m}\}$ ([CM93], Thm. 6.3.1). On a donc ${}^L G_\chi = \mathbf{Sp}(2m,\mathbb{C}) \times W_\mathbb{R}$ et $\mathcal{G}$ est isomorphe à ${}^L G_\chi \times \{\pm 1\}$.

Ceci donne de manière évidente un morphisme :

$$\bar\varphi_\chi : {}^L G_\chi = \mathbf{Sp}(2m,\mathbb{C}) \times W_\mathbb{R} \longrightarrow {}^L G = \mathbf{Sp}(2n,\mathbb{C}) \times W_\mathbb{R} \tag{6.1}$$

dont la restriction à $W_\mathbb{R}$ est l'identité de ce facteur.

On a aussi la possibilité de tordre ce morphisme par $\mathbf{sgn}_{W_\mathbb{R}}$ à valeurs dans le facteur $\{\pm 1\}$ de $\mathcal{G}$, c'est-à-dire que l'on définit un morphisme

$$\bar\varphi'_\chi : {}^L G_\chi = \mathbf{Sp}(2m,\mathbb{C}) \times W_\mathbb{R} \longrightarrow {}^L G = \mathbf{Sp}(2n,\mathbb{C}) \times W_\mathbb{R} \tag{6.2}$$

avec même restriction à $\mathbf{Sp}(2m,\mathbb{C})$ que $\bar\varphi_\chi$, la restriction de $\bar\varphi'_\chi$ à $W_\mathbb{R}$ étant

$$w \mapsto (\mathbf{sgn}_{W_\mathbb{R}}(w), w) \in \{\pm I_{2n-2m}\} \times W_\mathbb{R} \subset \mathcal{G} \times W_\mathbb{R}.$$

Cas 8 : $\mathbf{SO}(p,q)/\mathbf{SO}(r,s) \times \mathbf{SO}(r',s')$, $p+q = 2n$. On pose $m = r+s$. Comme $p+q = 2n$, p et q sont de même parité et le L-groupe de $\mathbf{SO}(p,q)$ est $\mathbf{SO}(2n,\mathbb{C}) \times W_\mathbb{R}$ si cette parité est aussi celle de n, et $\mathbf{SO}(2n,\mathbb{C}) \ltimes W_\mathbb{R}$ si cette parité est celle de $n+1$, l'action de $W_\mathbb{R}$ étant induite par l'automorphisme extérieur de $\mathbf{SO}(2n,\mathbb{C})$ en fixant un épinglage. On a ici $\mathbf{L}_\chi^\vee = \mathbf{GL}(1,\mathbb{C})^m \times \mathbf{SO}(2(n-m),\mathbb{C})$.

Rappelons que l'orbite unipotente principale de $\mathbf{SO}(2(n-m),\mathbb{C})$ est associée à la partition $(1, 2(n-m)-1)$ de $2(n-m)$, et son commutant dans $\mathbf{SO}(2n,\mathbb{C})$ est $\mathbf{S}(\mathbf{O}(2m+1,\mathbb{C}) \times \{\pm I_{2n-2m-1}\})$ (*cf.* [CM93], Thm. 6.3.1). On a donc ${}^L G_\chi = \mathbf{SO}(2m+1,\mathbb{C}) \times W_\mathbb{R}$.

Si ${}^L G = \mathbf{SO}(2n,\mathbb{C}) \times W_\mathbb{R}$, on voit immédiatement que $\mathcal{G}$ est isomorphe à ${}^L G_\chi \times \{\pm 1\}$, et si ${}^L G = \mathbf{SO}(2n,\mathbb{C}) \ltimes W_\mathbb{R}$, comme l'image de $\mathbf{SL}(2,\mathbb{C})$ est dans le groupe des points fixes de $\mathbf{SO}(2n,\mathbb{C})$ sous l'action de $W_\mathbb{R}$, on a la même conclusion. Comme en (6.1) et (6.2), on définit

$$\bar\varphi_\chi, \bar\varphi'_\chi : {}^L G_X = \mathbf{Sp}(2m,\mathbb{C}) \times W_\mathbb{R} \longrightarrow {}^L G = \mathbf{SO}(2n,\mathbb{C}) \ltimes W_\mathbb{R}. \tag{6.3}$$

où $\bar\varphi_\chi$ est donnée par les inclusions évidentes et $\bar\varphi'_\chi$ est obtenu en tordant $\bar\varphi_\chi$ par le caractère $\mathbf{sgn}_{W_\mathbb{R}}$ à valeurs dans le facteur $\{\pm 1\}$ de $\mathcal{G}$. □

PROPOSITION 6.3. *Dans les cas 9 et 10 avec n impair, le commutant $\mathcal{G}$ de l'image de $\mathbf{SL}(2,\mathbb{C})$ dans ${}^L G$ est isomorphe à ${}^L G_\chi \times \mathbf{SO}(2,\mathbb{C})$. Dans le cas 9 avec n impair, ceci fixe le morphisme φ_χ de (1.1). Dans le cas 10 avec n impair, le morphisme φ_χ de (1.1) est fixé à une torsion près dans $\{\pm 1\}$.*

Démonstration. **Cas 9** avec $n = p+q$ impair. Dans ce cas p et q sont de parité différente, le groupe G est forme intérieure de $\mathbf{SO}(n+1, n-1)$. On a alors ${}^L G = \mathbf{SO}(2n,\mathbb{C}) \ltimes W_\mathbb{R}$ et $\mathbf{L}_\chi^\vee = \mathbf{GL}(2,\mathbb{C})^{\frac{n-1}{2}} \times \mathbf{SO}(2,\mathbb{C})$. Le commutant $\mathcal{G}$ du $\mathbf{SL}(2)$ principal de $\mathbf{L}_\chi^\vee$ dans $\mathbf{SO}(2n,\mathbb{C})$ est $\mathbf{Sp}(n-1,\mathbb{C}) \times \mathbf{SO}(2,\mathbb{C})$ ([CM93], Thm. 6.1.3). On remarque que ce $\mathbf{SL}(2)$ principal est dans les points fixes de l'automorphisme extérieur par lequel agit $W_\mathbb{R}$ sur $\mathbf{SO}(2n,\mathbb{C})$. On a alors $\mathcal{G} = (\mathbf{Sp}(n-1,\mathbb{C}) \times \mathbf{SO}(2,\mathbb{C})) \ltimes W_\mathbb{R}$ et ${}^L G_\chi = \mathbf{Sp}(n-1,\mathbb{C}) \times W_\mathbb{R}$.

REMARQUE 6.4. Le seul L-morphisme de $W_{\mathbb{R}}$ à valeurs dans $\mathbf{SO}(2,\mathbb{C}) \ltimes W_{\mathbb{R}}$ trivial sur $\mathbb{R}_+^\times$ est le morphisme trivial. Le morphisme $\bar{\varphi}_{\mathcal{X}}$ est donc fixé, il n'y a pas possibilité de le tordre par un morphisme à valeurs dans le facteur $\mathbf{SO}(2,\mathbb{C}) \ltimes W_{\mathbb{R}}$ de $\mathcal{G}$.

Cas 10 avec n impair : $\mathbf{SO}(n,n)/\mathbf{GL}(n,\mathbb{R})$. Ici ${}^L G = \mathbf{SO}(2n,\mathbb{C}) \times W_{\mathbb{R}}$, et $\mathbf{L}_{\mathcal{X}}^\vee = \mathbf{GL}(2,\mathbb{C})^{\frac{n-1}{2}} \times \mathbf{SO}(2,\mathbb{C})$ et $\mathcal{G} = (\mathbf{Sp}(n-1,\mathbb{C}) \times \mathbf{SO}(2,\mathbb{C})) \times W_{\mathbb{R}}$. Ainsi ${}^L G_{\mathcal{X}} = \mathbf{Sp}(n-1,\mathbb{C}) \times W_{\mathbb{R}}$. Les L-morphismes de $W_{\mathbb{R}}$ à valeurs dans $\mathbf{SO}(2,\mathbb{C}) \times W_{\mathbb{R}}$ triviaux sur $\mathbb{R}_+^\times$ sont $\mathbf{Triv}_{W_{\mathbb{R}}}$ et $\mathbf{sgn}_{W_{\mathbb{R}}}$. On a donc un morphisme $\bar{\varphi}_{\mathcal{X}}$ défini par les inclusions évidentes, et de manière similaire à (6.1) et (6.2), on a possibilité de tordre le morphisme $\bar{\varphi}_{\mathcal{X}}$ par le caractère signe de $W_{\mathbb{R}}$ à valeurs dans le facteur $\mathbf{SO}(2,\mathbb{C})$ du commutant pour obtenir un morphisme $\bar{\varphi}'_{\mathcal{X}}$. □

Les cas restants sont ceux où les racines sphériques de $\mathcal{X}$ ne sont pas toutes des racines. On les traite maintenant.

Cas 1 : $\mathbf{GL}(n,\mathbb{R})/\mathbf{GL}(p,\mathbb{R}) \times \mathbf{GL}(n-p,\mathbb{R})$, $2p \leq n$. On a ici :

$$ {}^L G = \mathbf{GL}(n,\mathbb{C}) \times W_{\mathbb{R}}, \qquad \mathbf{L}_{\mathcal{X}}^\vee = \mathbf{GL}(1,\mathbb{C})^{2p} \times \mathbf{GL}(n-2p,\mathbb{C}). $$

Le commutant du $\mathbf{SL}(2)$ principal de $\mathbf{L}_{\mathcal{X}}^\vee$dans $\mathbf{GL}(n,\mathbb{C})$ est $\mathbf{GL}(2p) \times Z(\mathbf{GL}(n-2p,\mathbb{C}))$ et son commutant dans ${}^L G$ est donc

$$ \mathcal{G} = (\mathbf{GL}(2p,\mathbb{C}) \times Z(\mathbf{GL}(n-2p,\mathbb{C}))) \times W_{\mathbb{R}}. $$

Cas 3 : $\mathbf{U}(p,q)/\mathbf{U}(r,s) \times \mathbf{U}(r',s')$. Posons $p+q=n$ et $m=r+s$. On a ici : ${}^L G = \mathbf{GL}(n,\mathbb{C}) \ltimes W_{\mathbb{R}}$, $\mathbf{L}_{\mathcal{X}}^\vee = \mathbf{GL}(1,\mathbb{C})^{2m} \times \mathbf{GL}(n-2m,\mathbb{C})$. Le commutant du $\mathbf{SL}(2)$ principal de $\mathbf{L}_{\mathcal{X}}^\vee$ dans $\mathbf{GL}(n,\mathbb{C})$ est $\mathbf{GL}(2m) \times Z(\mathbf{GL}(n-2m,\mathbb{C}))$. A conjugaison près, on s'arrange pour que l'image du $\mathbf{SL}(2)$ principal de $\mathbf{L}_{\mathcal{X}}^\vee$ soit stable par l'automorphisme $g \mapsto w_n {}^t g^{-1} w_n$ qui définit le L-groupe de $\mathbf{U}(n)$ (voir section 5). Le commutant $\mathcal{G}$ est alors $\mathcal{G} = (\mathbf{GL}(2m) \times Z(\mathbf{GL}(n-2m,\mathbb{C}))) \ltimes W_{\mathbb{R}}$.

Cas 4 : $\mathbf{U}(n,n)/\mathbf{GL}(n,\mathbb{C})$. On a ici ${}^L G = \mathbf{GL}(2n,\mathbb{C}) \ltimes W_{\mathbb{R}}$, $\mathbf{L}_{\mathcal{X}}^\vee = \mathbf{GL}(1,\mathbb{C})^{2n}$. Ainsi $\mathbf{L}_{\mathcal{X}}^\vee$ est un tore et son $\mathbf{SL}(2)$ principal est trivial. Son commutant est donc ${}^L G$.

7. FIN DE LA DÉMONSTRATION DE LA CONJECTURE

Dans cette section, nous finissons la démonstration de la conjecture de Sakellaridis et Venkatesh commencée dans les sections 4 et 6. Dans les cas couverts par la proposition 6.1, le commutant $\mathcal{G}$ est isomorphe à ${}^L G_{\mathcal{X}}$, ce qui fixe le morphisme $\varphi_{\mathcal{X}}$ et la conjecture est essentiellement tautologique, puisque le paramètre d'Arthur ψ_π se factorise nécessairement par $\varphi_{\mathcal{X}}$. Il reste à vérifier que le morphisme ϕ_π, a priori tempéré, est en fait discret. On détaille les cas particuliers pour montrer les torsions éventuelles quand l'isomorphisme entre ${}^L G_{\mathcal{X}}$ et le commutant n'est pas l'identité sur $W_{\mathbb{R}}$.

Cas 2 et 13 : dans ces cas L est un tore compact. Les représentations $A_{\mathfrak{q}}(\pi_L)$ sont alors des séries discrètes de G. Comme on a identité des

L-groupes ${}^LG_{\mathcal{X}} = {}^LG$, les paramètres ψ_π (resp. (3.7) et (3.20)) sont des paramètres de Langlands discrets et il n'y a rien de plus à démontrer.

Cas 5 et 6 : les paramètres sont de la forme $\psi_\pi = \bigoplus_{i=1}^n (\chi_{m_i} \boxtimes R[2])$ (*cf.*(3.10) et (3.11)). Le paramètre $\phi_d = \bigoplus_{i=1}^n \chi_{m_i}$ est un paramètre de Langlands discret de $\mathbf{U}_n$ si n est impair et $\phi_d = \bigoplus_{i=1}^n \chi_{m_i-1}$ est un paramètre de Langlands discret de $\mathbf{U}_n$ si n est pair.

On a vu dans la section 6 que ${}^LG_{\mathcal{X}}$ est isomorphe à ${}^L\mathbf{U}_n$. On envoie alors ${}^LG_{\mathcal{X}} = {}^L\mathbf{U}_n$ dans ${}^LG$ par le morphisme ξ_+ (si n est impair) et ξ_- (si n est pair), définis respectivement en (5.2) et (5.3), ce qui définit le morphisme $\varphi_{\mathcal{X}}$ de (1.1). On a alors la propriété de factorisation $\psi_\pi = \varphi_{\mathcal{X}} \circ \phi_d$. Remarquons que la torsion sur $W_{\mathbb{R}}$ utilisée dans la définition du morphisme ξ_- a bien l'effet voulu sur le caractère infinitésimal, en le translatant de $1/2$, ou autrement dit, les χ_{m_i-1} deviennent bien χ_{m_i} après composition par φ_χ.

Cas 11 et 12 : les paramètres ψ_π sont respectivement de la forme (3.10) et (3.11). Le paramètre discret $\phi_d = \bigoplus_{i=1}^p \left(\delta\left(\frac{m_i}{2}, -\frac{m_i}{2}\right) \boxtimes R[2]\right)$, avec les m_i impairs, est à valeurs dans $\mathbf{Sp}(2p, \mathbb{C}) \times W_{\mathbb{R}} = {}^LG_{\mathcal{X}}$ et on a la factorisation $\psi_\pi = \varphi_{\mathcal{X}} \circ \phi_d$ (dans le cas 12, remplacer p par n).

Cas 9 et 10 avec n pair : les paramètres ψ_π sont de la forme $\psi_\pi = \bigoplus_{i=1}^{\frac{n}{2}} \left(\delta\left(\frac{m_i}{2}, -\frac{m_i}{2}\right) \boxtimes R[2]\right)$ avec les m_i impairs. (*cf.*(3.14) et (3.16)). Le paramètre $\phi_d = \bigoplus_{i=1}^{\frac{n}{2}} \delta\left(\frac{m_i}{2}, -\frac{m_i}{2}\right)$ est de bonne parité pour un groupe orthogonal impair de rang $\frac{n}{2}$, dont le L-groupe est $\mathbf{Sp}(n, \mathbb{C}) \times W_{\mathbb{R}} = {}^LG_{\mathcal{X}}$. Avec le morphisme $\varphi_{\mathcal{X}}$ défini dans ce cas dans la section 6, on a bien la propriété de factorisation $\psi_\pi = \varphi_{\mathcal{X}} \circ \phi_d$.

On passe maintenant au cas couverts par la proposition 6.3.

Cas 9 et 10 avec n impair : les paramètres ψ_π sont respectivement de la forme

$$\psi_\pi = \bigoplus_{i=1}^{\frac{n-1}{2}} \left(\delta\left(\frac{m_i}{2}, -\frac{m_i}{2}\right) \boxtimes R[2]\right) \oplus \left(\mathbf{sgn}_{W_{\mathbb{R}}} \boxtimes R[1]\right) \oplus \left(\mathbf{Triv}_{W_{\mathbb{R}}} \boxtimes R[1]\right)$$

$$\psi_\pi = \bigoplus_{i=1}^{\frac{n-1}{2}} \left(\delta\left(\frac{m_i}{2}, -\frac{m_i}{2}\right) \boxtimes R[2]\right) \oplus \left(\mathbf{Triv}_{W_{\mathbb{R}}} \boxtimes R[1]\right) \oplus \left(\mathbf{Triv}_{W_{\mathbb{R}}} \boxtimes R[1]\right)$$

avec les m_i impairs. (*cf.* (3.15) et (3.17)). On pose donc $\phi_d = \bigoplus_{i=1}^{\frac{n-1}{2}} \delta\left(\frac{m_i}{2}, -\frac{m_i}{2}\right)$. C'est un paramètre de bonne parité pour un groupe orthogonal impair de rang $\frac{n-1}{2}$, dont le L-groupe est $\mathbf{Sp}(\frac{n-1}{2}, \mathbb{C}) \times W_{\mathbb{R}} = {}^LG_{\mathcal{X}}$. Avec les morphismes $\varphi_{\mathcal{X}}$ défini dans ce cas dans la section 6 (dans le cas 9, le morphisme $\varphi_{\mathcal{X}}$ ést déjà fixé, *cf.* remarque 6.4, dans le cas 10, on prend le morphisme évident $\varphi_{\mathcal{X}}$ sans la torsion sur le facteur $W_{\mathbb{R}}$). On a bien la propriété de factorisation $\psi_\pi = \varphi_{\mathcal{X}} \circ \phi_d$.

On continue par les cas couverts par la proposition 6.2.

Cas 7 : les paramètres ψ_π sont de la forme (3.12), c'est-à-dire

$$\psi = \bigoplus_{i=1}^{r+s} \left(\delta \left(\frac{m_i}{2}, -\frac{m_i}{2} \right) \boxtimes R[2] \right) \oplus (\mathbf{Triv}_{W_\mathbb{R}} \boxtimes R[2(n-r-s)])$$

où m_i sont des entiers impairs et $\epsilon \in \{0,1\}$. Le paramètre $\phi_d = \bigoplus_{i=1}^{r+s} \delta \left(\frac{m_i}{2}, -\frac{m_i}{2} \right)$ est un paramètre discret pour $\mathbf{SO}(2(r+s)+1)$, dont le L-groupe est $\mathbf{Sp}(2(r+s),\mathbb{C}) \times W_\mathbb{R} = {}^L G_\mathcal{X}$. Le paramètre ψ_π se factorise donc en $\psi_\pi = \varphi_\mathcal{X} \circ \phi_d$, où pour $\varphi_\mathcal{X}$ nous prenons le morphisme défini en (6.1).

Cas 8: les paramètres ψ_π sont de la forme (3.13), c'est-à-dire

$$\psi = \bigoplus_{i=1}^{r+s} \left(\delta \left(\frac{m_i}{2}, -\frac{m_i}{2} \right) \boxtimes R[2] \right) \oplus (\eta_1 \boxtimes R[2(n-r-s)-1]) \oplus (\eta_2 \boxtimes R[1]),$$

où m_i sont des entiers pairs et $\eta_1, \eta_2 \in \{\mathbf{sgn}_{W_\mathbb{R}}, \mathbf{Triv}_{W_\mathbb{R}}\}$ avec $\eta_1\eta_2 = \mathbf{Triv}_{W_\mathbb{R}}$ si p et q sont de la parité de n et $\eta_1\eta_2 = \mathbf{sgn}_{W_\mathbb{R}}$ si p et q sont de la parité de $n-1$.

Le paramètre $\phi_d = \bigoplus_{i=1}^{r+s} \delta \left(\frac{m_i}{2}, -\frac{m_i}{2} \right)$ est un paramètre discret pour un groupe symplectique de rang $r+s$, dont le L-groupe est $\mathbf{SO}(2(r+s)+1,\mathbb{C}) \times W_\mathbb{R} = {}^L G_\mathcal{X}$. Le paramètre ψ_π se factorise donc en $\psi_\pi = \varphi_\mathcal{X} \circ \phi_d$, où pour $\varphi_\mathcal{X}$ est le morphisme défini dans la section 6 sans torsion par $\mathbf{sgn}_{W_\mathbb{R}}$ (*cf.* (6.3)).

Remarque 7.1. Nous conjecturons que les paramètres (3.12), (3.13) et (3.17) avec des parties unipotentes non triviales et les morphismes $\varphi_\mathcal{X}$ de la section 6 tordus par $\mathbf{sgn}_{W_\mathbb{R}}$ apparaissent dans le cadre des conjectures généralisées avec le caractère χ de H non trivial. Nous espérons revenir sur ces questions dans un article ultérieur.

Nous traitons maintenant les cas restants.

Cas 1 : les paramètres ψ_π sont de la forme (3.6), c'est-dire

$$\psi_\pi = \bigoplus_{i=1}^{p} \left(\delta \left(\frac{m_i}{2}, -\frac{m_i}{2} \right) \boxtimes R[1] \right) \oplus (\mathbf{Triv}_{W_\mathbb{R}} \boxtimes R[n-2p]).$$

avec les m_i entiers impairs distincts. On note $\bar{\varphi}_\mathcal{X}$ l'inclusion naturelle

$$\bar{\varphi}_\mathcal{X} : \mathbf{Sp}(2p,\mathbb{C}) \times W_\mathbb{R} \to (\mathbf{GL}(2p,\mathbb{C}) \times \mathbf{GL}(n-2p,\mathbb{C})) \times W_\mathbb{R} \hookrightarrow \mathbf{GL}(n,\mathbb{C}) \times W_\mathbb{R}$$

qui résulte de la décomposition de $\mathbb{C}^n$ en la somme de $\mathbb{C}^{2p} \oplus \mathbb{C}^{n-2p}$. On pose alors $\phi_d = \bigoplus_{i=1}^{p} \left(\delta \left(\frac{m_i}{2}, -\frac{m_i}{2} \right) \boxtimes R[1] \right)$. Comme les m_i sont impairs, ceci est bien un paramètre à valeurs dans ${}^L G_\mathcal{X} = \mathbf{Sp}(2p,\mathbb{C}) \times W_\mathbb{R}$ et l'on a la propriété de factorisation $\psi_\pi = \varphi_\mathcal{X} \circ \phi_d$.

Cas 3 : les paramètres ψ_π sont de la forme (3.8), c'est-dire

$$\psi_\pi = \bigoplus_{i=1}^{r+s} ((\chi_{m_i} \oplus \chi_{-m_i}) \boxtimes R[1]) \oplus (\chi_0 \boxtimes R[n-2(r+s)]).$$

La représentation $\chi_{m_i} \oplus \chi_{-m_i}$ de $\mathbb{C}^\times$ s'étend de manière unique en la représentation $\delta\left(\frac{m_i}{2}, -\frac{m_i}{2}\right)$ de $W_\mathbb{R}$ cette représentation étant à valeurs dans $\mathbf{SL}(2,\mathbb{C})$ si m_i est impair (c'est-à-dire n pair) et à valeurs dans $\mathbf{O}(2,\mathbb{C})$ si m_i est pair (c'est-à-dire n impair). Posons

$$\phi_d = \bigoplus_{i=1}^{r+s} \delta\left(\frac{m_i}{2}, -\frac{m_i}{2}\right) : W_\mathbb{R} \longrightarrow \begin{cases} \mathbf{Sp}(2(r+s),\mathbb{C}) \times W_\mathbb{R} \text{ si } n \text{ pair} \\ \mathbf{O}(2(r+s),\mathbb{C}) \times W_\mathbb{R} \text{ si } n \text{ impair} \end{cases}$$

Si n est pair, on pose ${}^L G_\mathcal{X} = \mathbf{Sp}(2(r+s),\mathbb{C}) \times W_\mathbb{R}$ comme prévu par [KS17], et le morphisme $\bar{\varphi}_\mathcal{X}$ de (1.3) est le morphisme $\xi_{\mathbf{Sp}}$ de la proposition 5.1, avec $a = b = 0$. On a la propriété de factorisation voulue $\psi_\pi = \varphi_\mathcal{X} \circ \phi_d$.

Dans le cas où n est impair, une première façon d'obtenir un énoncé valide est de prendre ${}^L G_\mathcal{X} = \mathbf{SO}(2(r+s)\mathbb{C}) \ltimes_{r+s} W_\mathbb{R}$ (voir section 5 où l'on a donné la réalisation du L-groupe $\mathbf{SO}(2(r+s)\mathbb{C}) \ltimes_{r+s} W_\mathbb{R}$ d'un groupe orthogonal pair de rang $r+s$ admettant des séries discrètes). On a la propriété de factorisation voulue $\psi_\pi = \varphi_\mathcal{X} \circ \phi_d$, mais ${}^L G_\mathcal{X}$ n'est pas le groupe prévu dans [SV17] et [KS17], car celui-ci a pour composante neutre $\mathbf{Sp}(2(r+s),\mathbb{C})$.

La seconde façon d'obtenir un énoncé valide dans le cas 3, n impair, nous a été suggérée par Sakellaridis. Posons $k = r+s$ pour alléger les écritures. On garde la composante neutre $G_\mathcal{X}^\vee = \mathbf{Sp}(2k,\mathbb{C})$ de ${}^L G_\mathcal{X}$ déterminée par Knop et Schalke, et l'on prend pour ${}^L G_\mathcal{X}$ un produit semi-direct $\mathbf{Sp}(2k,\mathbb{C}) \ltimes W_\mathbb{R}$, qui n'est pas un L-groupe au sens de Langlands [Lan89] (le scindage $W_\mathbb{R} \to {}^L G_\mathcal{X}$ n'est pas «distingué »). Une telle extension de la notion de L-groupe a été introduite dans [ABV92] sous la terminologie «E-group ». Les auteurs montrent que les paramètres de Langlands construits avec ces L-groupes paramètrent certaines représentations projectives (*loc. cite*, Thm. 10.4). On forme le produit semi-direct $\mathbf{Sp}(2k,\mathbb{C}) \ltimes W_\mathbb{R}$ où $W_\mathbb{C}$ agit trivialement et où $j \in W_\mathbb{R}$ agit par conjugaison par un élément de $\mathbf{GSp}(2k,\mathbb{C})$ de norme symplectique -1.

LEMME 7.2. *Ce produit semi-direct est naturellement isomorphe à un sous-groupe de $\mathcal{G}$, le commutant de l'image de $\mathbf{SL}(2,\mathbb{C})$.*

Démonstration. Le commutant $\mathcal{G}$ a été calculé à la fin de la section 6. On part d'une décomposition $\mathbb{C}^n = \mathbb{C}^k \oplus \mathbb{C}^{n-2k} \oplus \mathbb{C}^k$, de sorte que l'image de $\mathbf{SL}(2,\mathbb{C})$ est un sous-groupe de $\mathbf{GL}(n-2k,\mathbb{C})$. On a ainsi $\mathbf{GL}(2k,\mathbb{C}) \ltimes W_\mathbb{R} \subset \mathcal{G}$. Ici le produit semi-direct est défini par $(\forall z \in \mathbb{C}^\times,\ \forall g \in \mathbf{GL}(2k,\mathbb{C}),\ z \cdot g = g$ et $(\forall g \in \mathbf{GL}(2k,\mathbb{C})),\ j \cdot g = t w_{2k}\, {}^t g^{-1} w_{2k}^{-1} t$, où w_{2k} est la matrice antisymétrique ayant des 1 et -1 alternant sur l'antidiagonale (*cf.* notations de la section 5.1) et t est l'élément de $\mathbf{GL}(2k,\mathbb{C})$ qui agit par -1 sur le premier $\mathbb{C}^k$ et par 1 sur le dernier $\mathbb{C}^k$. Ainsi pour tout $g \in \mathbf{GL}(2k,\mathbb{C})$, $j \cdot g = tgt$. Evidemment t est un élément de $\mathbf{GSp}(2k,\mathbb{C})$ de rapport de similitude -1. Ainsi $W_\mathbb{R}$ laisse invariant $\mathbf{Sp}(2k,\mathbb{C})$ dans son action par conjugaison et j agit via la conjugaison par t. Cela démontre le lemme. ∎

PROPOSITION 7.3. *Soit ψ_π le paramètre d'Arthur d'une série discrète de $\mathcal{X}$ (on est dans le cas 3, n impair). La restriction de ψ_π à $W_\mathbb{R}$ se factorise, à conjugaison près, par le produit semi-direct $\mathbf{Sp}(2k,\mathbb{C}) \ltimes W_\mathbb{R}$, et donc en particulier satisfait la conjecture de Sakellaridis et Venkatesh avec ${}^L G_\mathcal{X} = \mathbf{Sp}(2k,\mathbb{C}) \ltimes W_\mathbb{R}$.*

Démonstration. Soit ψ_π un tel paramètre. On a vu ci-dessus que la restriction de ψ_π à $W_\mathbb{R}$ est orthogonale de dimension $2k$, plus précisément est la somme de k représentations orthogonales $\delta\left(\frac{m_i}{2}, -\frac{m_i}{2}\right)$ de dimension deux de $W_\mathbb{R}$ toutes distinctes (les m_i sont pairs, ont les suppose rangés dans l'ordre décroissant). A l'aide de ces paramètres, on construit un morphisme ϕ' de $W_\mathbb{R}$ dans $\mathbf{GL}(2k,\mathbb{C}) \ltimes W_\mathbb{R}$, en posant pour tout $z \in \mathbb{C}^\times$

$$\phi'(z) = \left(\left((z/\overline{z})^{m_1}, \cdots, (z/\overline{z})^{m_k}, \underbrace{1, \cdots, 1}_{n-2k}, (z/\overline{z})^{-m_k}, \cdots, (z/\overline{z})^{-m_1} \right), z \right),$$

et $\phi'(j) = (tJ_{2k}, j)$. Pour vérifier que l'on a bien construit un morphisme, il faut remarquer que les m_i étant des entiers pairs $\phi'(-1) = 1$ et que $(tw_{2k})^2 = 1$ ce qui donne $\phi'(j)^2 = \phi'(j^2) = \phi'(-1)$.

Il est clair que $\phi'(z) \in \mathbf{Sp}(2k,\mathbb{C}) \times W_\mathbb{C}$ et que $\phi'(j) \in (\mathbf{GSp}(2k,\mathbb{C}), j)$. Le sous-groupe de $\mathbf{GL}(2k,\mathbb{C}) \ltimes W_\mathbb{R}$ engendré par $\mathbf{Sp}(2k,\mathbb{C})$ et $\phi'(j)$ est indépendant des paramètres m_i et est isomorphe au produit semi-direct $\mathbf{Sp}(2k,\mathbb{C}) \ltimes W_\mathbb{R}$ par l'application qui est l'identité sur $\mathbf{Sp}(2k,\mathbb{C})$ et envoie $(t,j) \in (\mathbf{GSp}(2k,\mathbb{C}), j)$ sur $(1,j) \in \mathbf{Sp}(2k,\mathbb{C}) \ltimes W_\mathbb{R}$. On note ϕ le composé de ϕ' avec cet isomorphisme suivi de l'inclusion de $\mathbf{Sp}(2k,\mathbb{C}) \ltimes W_\mathbb{R}$ dans le commutant dans ${}^L\mathbf{U}_n$ de l'image de $\mathbf{SL}(2,\mathbb{C})$. On obtient donc un morphisme ψ de $W_\mathbb{R} \times \mathbf{SL}(2,\mathbb{C})$ dans ${}^L\mathbf{U}_n$. Ce morphisme est un paramètre d'Arthur discret. Le paquet d'Arthur qu'il détermine est uniquement déterminé par la restriction de ψ_π à $W_\mathbb{C} \times \mathbf{SL}(2,\mathbb{C})$. Il est clair que cette restriction est bien conjuguée de la restriction à ce même groupe du paramètre d'Arthur ψ_π dont on est parti. □

REMARQUE 7.4. Il est vraisemblable que les plongements plus généraux obtenus dans la proposition 5.1 et la possibilité d'avoir le facteur $\chi_{m_0} \boxtimes R[n-2(r+s)]$ avec $m_0 \neq 0$ dans le paramètre ψ_π servent à étendre les conjectures au cas où le caractère χ de H/H_e n'est pas trivial.

Cas 4 : les paramètres ψ_π sont de la forme (3.9), c'est-dire $\psi_\pi = \bigoplus_{i=1}^n ((\chi_{m_i} \oplus \chi_{-m_i}) \boxtimes R[1]$, où les m_i sont des entiers impairs. La représentation $\chi_{m_i} \oplus \chi_{-m_i}$ de $\mathbb{C}^\times$ s'étend de manière unique en la représentation $\delta\left(\frac{m_i}{2}, -\frac{m_i}{2}\right)$ de $W_\mathbb{R}$ cette représentation étant à valeurs dans $\mathbf{SL}(2,\mathbb{C})$ si m_i est impair. Posons $\phi_d = \bigoplus_{i=1}^n \delta\left(\frac{m_i}{2}, -\frac{m_i}{2}\right) : W_\mathbb{R} \longrightarrow \mathbf{Sp}(2n,\mathbb{C}) \times W_\mathbb{R}$. On pose ${}^L G_\mathcal{X} = \mathbf{Sp}(2n,\mathbb{C}) \times W_\mathbb{R}$ comme prévu par [KS17], et le morphisme $\bar{\varphi}_\mathcal{X}$ de (1.3) est le morphisme $\xi_{\mathbf{Sp}}$ de la proposition 5.1, avec $a = b = 0$ (avec $2n$ à la place de n). On a la propriété de factorisation $\psi_\pi = \varphi_\mathcal{X} \circ \phi_d$. □

8. Les paquets d'Arthur attachés aux séries discrètes des espaces symétriques

Dans ce qui précède, nous avons attaché à chaque série discrète π d'un des espaces symétriques $\mathcal{X}$ que nous considérons un paramètre d'Arthur ψ_π tel que π est dans le paquet d'Arthur $\Pi(G, \psi_\pi)$ et nous avons vérifié que ce paramètre se factorise bien de la façon prédite par les conjectures de Sakellaridis et Venkatesh.

Dans cette section, nous prenons une perspective légèrement différente: étant donné un tel paquet $\Pi(G, \psi)$, quels sont les éléments de ce paquet qui sont des séries discrètes d'un des espaces symétriques $\mathcal{X}$? Un résultat intéressant est que si l'on fixe un G et un tel paramètre ψ, un élément du paquet ne contribue qu'à un seul espace symétrique parmi ceux possibles.

Les caractères $\epsilon(\pi)$ de $A(\psi)$. Soit $\psi : W_{\mathbb{R}} \times \mathbf{SL}(2, \mathbb{C}) \to {}^L G$ un paramètre d'Arthur. Posons $S_\psi = \mathrm{Centr}_{G^\vee}(\psi)$ et $A(\psi) = S_\psi/(S_\psi)^0$. Lorsque les $A(\psi)$ sont abéliens, ce qui est le cas des groupes considérés ici, la théorie d'Arthur attache à toute représentation π du paquet d'Arthur $\Pi(\psi)$ une représentation de dimension finie $\epsilon(\pi)$ de $A(\psi)$. Pour les groupes unitaires, spéciaux orthogonaux ou symplectiques (et pour $\mathbf{GL}(n, \mathbb{R})$ où les $A(\psi)$ sont triviaux) on sait d'après [MR19], [MR20] que les $\epsilon(\pi)$ sont de dimension 1, c'est-à-dire, pour tout $\pi \in \Pi(\psi)$, $\epsilon(\pi) \in \widehat{A(\psi)}$. Ces $\epsilon(\pi)$ ont de plus été déterminés de manière explicite, dépendant de certains choix (celui d'une forme intérieure pure quasi-déployée de référence, et d'une donnée de Whittaker pour celle-ci). Soit ψ un paramètre de bonne parité pour un groupe G comme dans la section 3.2, donc comme en (3.3) ou (3.5). Alors $A(\psi) \simeq (\mathbb{Z}/2\mathbb{Z})^R$. Un caractère de ce groupe sera donc donné par une suite $(\epsilon_1, \dots, \epsilon_R)$ à valeurs dans $\mathbb{Z}/2\mathbb{Z}$. On calcule ci-dessous ces invariants $\epsilon(\pi)$ pour les séries discrètes π des espaces symétriques et le paramètre d'Arthur qui leur est attaché et l'on en tire quelques conséquences.

Cas 1 : $\mathcal{X} = \mathbf{GL}(n, \mathbb{R})/\mathbf{GL}(p, \mathbb{R}) \times \mathbf{GL}(n-p, \mathbb{R})$, $2p \leq n$. Les paquets d'Arthur sont des singletons, et les groupes $A(\psi)$ sont triviaux. Un paramètre d'Arthur ψ détermine donc une unique représentation $\pi(\psi)$. Les paramètres considérés sont de la forme

$$\psi = \bigoplus_{i=1}^{p} \left(\delta\left(\frac{m_i}{2}, \frac{m_i}{2} \right) \boxtimes R[1] \right) \oplus (\mathbf{Triv}_{W_{\mathbb{R}}} \boxtimes R[n-2p])$$

les m_i étant des entiers impairs distincts. La représentation unitaire irréductible $\pi(\psi)$ de $\mathbf{GL}(n, \mathbb{R})$ attachée à un tel paramètre ne contribue donc qu'à un seul des espaces symétriques ci-dessus (lorsque p varie).

Cas 2 : $\mathcal{X} = \mathbf{U}(p, q)/\mathbf{O}(p, q)$, $n = p+q$. Nous avons vu que les séries discrètes de $\mathcal{X}$ sont des séries discrètes de G. Ce qui les distingue parmi celles-ci est que leur K-type minimal a des invariants non triviaux sous $K \cap H = \mathbf{O}(p) \times$

$\mathbf{O}(q)$. Un paquet de Langlands de séries discrètes de $\mathbf{U}(p,q)$ est déterminé par un caractère infinitésimal entier régulier, c'est-à-dire dans un système de coordonnées usuelles, un n-uplet $\lambda = (\lambda_1, \dots, \lambda_n)$ où les λ_i forment une suite strictement décroissante constitués d'entiers si n est impair, et de demi-entiers non entiers si n est pair. Notons $\Pi(\lambda)$ ce paquet de Langlands. Remarquons que $\rho = \left(\frac{n-1}{2}, \frac{n-3}{2}, \dots, -\frac{n-1}{2}\right)$ de sorte que $\lambda - \rho$ est toujours un n-uplet d'entiers.

Les représentations à l'intérieur d'un paquet de Langlands $\Pi(\lambda)$ de séries discrètes de paramètre de Langlands ψ sont paramétrées par le caractère de $A(\psi)$ qui leur est attaché. Pour la normalisation de cette paramétrisation, on suppose que la forme intérieure pure de $\mathbf{U}(n)$ qui contient la représentation correspondant au caractère trivial de $A(\psi)$ est $\mathbf{U}(\frac{n+1}{2}, \frac{n-1}{2})$ si n est impair et $\mathbf{U}(\frac{n}{2}, \frac{n}{2})$ si n est pair.

PROPOSITION 8.1. *Si $n = p + q$ est pair, et si $\lambda - \rho$ est un n-uplet d'entiers tous de même parité ω, les séries discrètes de $\mathbf{U}(p,q)$ dans le paquet $\Pi(\lambda)$ sont toujours des séries discrètes pour $\mathbf{U}(p,q)/\mathbf{SO}(p,q)$, et elles le sont pour $\mathbf{U}(p,q)/\mathbf{O}(p,q)$ si p a la parité ω.*

Si n est impair, alors quel que soit λ, il existe exactement une forme intérieure $\mathbf{U}(p,q)$ (à permutation près de p et q, et $p + q = n$) et une série discrète π de caractère infinitésimal λ pour cette forme intérieure qui est une série discrète pour $\mathbf{U}(p,q)/\mathbf{SO}(p,q)$. Cette série discrète π est celle qui correspond au caractère $\epsilon(\pi)$ de $A(\psi)$ donné par $\epsilon(\pi)_i = (-1)^{\lambda_i + \frac{n-1}{2}}$ avec p le nombre d'entiers i tel que $\lambda_i + \frac{n+1}{2} - i$ est pair.

Remarquons aussi que la série discrète π^- de $\mathbf{U}(q,p)$ de caractère infinitésimal λ apparaissant dans l'espace symétrique $\mathbf{U}(q,p)/\mathbf{SO}(q,p)$ (qui s'identifie à π si l'on identifie $\mathbf{U}(p,q)$ et $\mathbf{U}(q,p)$) correspond pour ce choix de paramétrisation, au caractère opposé du $A(\psi)$, c'est-à-dire $\epsilon(\pi^-)_i = (-1)^{\lambda_i + \frac{n+1}{2}}$.

Démonstration. Pour démontrer cette proposition, on explicite le K-type minimal d'une série discrète π d'un paquet $\Pi(\lambda)$ en fonction de $\epsilon(\pi)$. Ce calcul est un peu technique. Pour que π soit une série discrète de $\mathbf{U}(p,q)/\mathbf{SO}(p,q)$, le plus haut poids de ce K-type doit être formé d'entiers ayant tous même parité et pour être une série discrète de $\mathbf{U}(p,q)/\mathbf{O}(p,q)$ ces entiers doivent être tous pairs. On fixe π dans $\Pi(\lambda)$ avec $\epsilon(\pi) = (\epsilon_1, \cdots, \epsilon_n)$. On pose

$$p := |\{i; \epsilon_i = (-1)^{i-1}\}|.$$

On note L le tore compact dont le i-ème facteur $\mathbf{U}(1)$ est dans $\mathbf{U}(p)$ si et seulement si $\epsilon_i = (-1)^{i-1}$. Avec cela on détermine la sous-algèbre parabolique θ-stable $\mathfrak{q} = \mathfrak{l} \oplus \mathfrak{u}$ de $\mathfrak{gl}(n, \mathbb{C})$ permettant de réaliser π comme $A_{\mathfrak{q}}(\lambda - \rho)$. Le plus haut poids du $\mathbf{U}(p) \times \mathbf{U}(q)$-type minimal est alors $\lambda - \rho + 2\rho(\mathfrak{u} \cap \mathfrak{p})$.

Pour tout $i \in [1,n]$, on pose $\tilde{\mu}_i := \lambda_i + (n+1)/2 - i = (\lambda-\rho)_i$ et

$$\mu_i := \tilde{\mu}_i + |\{j \in [1,n]; \epsilon_i(-1)^{i-1} \neq \epsilon_j(-1)^{j-1} \text{ et } \lambda_j < \lambda_i\}| - |\{j \in [1,n]; \epsilon_i(-1)^{i-1} \neq \epsilon_j(-1)^{j-1} \text{ et } \lambda_j > \lambda_i\}|.$$

Le plus haut poids du K-type minimal de π est alors $\big(\mu_i; \epsilon_i = (-1)^{i-1}\big); \big(\mu_i; \epsilon_i \neq (-1)^{i-1}\big)$.

Distinguons les cas : si n est pair, pour que les μ_i aient tous même parité, il faut et il suffit que les $\tilde{\mu}_i$ aient tous même parité. Cela permet de conclure facilement dans ce cas.

Si n est impair, pour que les μ_i aient tous même parité, il faut et il suffit que que les $\tilde{\mu}_i$ pour i tel que $\epsilon_i = (-1)^{i-1}$ aient tous même parité et soient de parité opposé aux $\tilde{\mu}_i$ tel que $\epsilon_i \neq (-1)^{i-1}$. Il faut donc nécessairement que $(p, n-p)$ soit à l'ordre près

$$(|\{i; \tilde{\mu}_i \equiv 0[2]\}|, |\{i; \tilde{\mu}_i \equiv 1[2]\}|),$$

et si l'on prend $p = |\{i; \tilde{\mu}_i \equiv 0[2]\}|$, il faut aussi que $\epsilon_i = (-1)^{i-1}$ si et seulement si $(-1)^{\lambda_i + (n+1)/2 - i} = 1$, c'est-à-dire que pour tout i on doit avoir $\epsilon_i = (-1)^{\lambda_i + (n-1)/2}$. Par contre si l'on prend $p = |\{i; \tilde{\mu}_i \equiv 1[2]\}|$ alors $\epsilon_i = (-1)^{i-1}$ si et seulement si $(-1)^{\lambda_i + (n+1)/2 - i} = -1$, c'est-à-dire que pour tout i on doit avoir $\epsilon_i = (-1)^{\lambda_i + (n+1)/2}$. □

Cas 3 : $\mathcal{X} = \mathbf{U}(p,q)/\mathbf{U}(r,s) \times \mathbf{U}(r',s')$. Notons cet espace symétrique de manière plus précise par $\mathcal{X}_{r,s}$, ce qui nous permet de faire varier ces deux entiers. On a vu en (3.8) que les paramètres ψ sont de la forme $\psi = \bigoplus_{i=1}^{r+s}((\chi_{m_i} \oplus \chi_{-m_i}) \boxtimes R[1]) \oplus (\chi_0 \boxtimes R[n-2(r+s)])$. Le résultat suivant découle des calculs des $\epsilon(\pi) \in \widehat{A(\psi)}$ dans [MR19] pour $\pi \in \Pi(\psi)$. On écrit $\epsilon(\pi) = (\epsilon_1(\pi), \dots, \epsilon_{2(r+s)}(\pi), \epsilon_0(\pi))$, où le ϵ_0 vient du facteur $\chi_0 \boxtimes R[n-2(r+s)]$ du paramètre et est donc absent si $n = 2(r+s)$.

Proposition 8.2. *Soit ψ comme ci-dessus et $\pi \in \Pi(\mathbf{U}(p,q), \psi)$. Alors π est dans le spectre discret de $\mathcal{X}_{r,s}$ si et seulement si*

$$\epsilon(\pi) = (\epsilon_1(\pi), \dots, \epsilon_{2(r+s)}(\pi), \epsilon_0(\pi))$$

vérifie

$$\#\left\{i \in [\![1, 2(r+s)]\!] \,|\, \epsilon_i(\pi) = (-1)^{i-1}\right\} = 2r,$$

$$\#\left\{i \in [\![1, 2(r+s)]\!] \,|\, \epsilon_i(\pi) = (-1)^{i}\right\} = 2s,$$

(rappelons que ceci dépend du choix d'une donnée forme intérieure pure quasi-déployée, un autre choix pourrait inverser les deux conditions) et

$$\epsilon_{2i-1}(\pi)\epsilon_{2i}(\pi) = (-1)^{p+q-1}, \ (i = 1, \dots, r+s),$$

condition qui ne dépend pas du choix de la forme intérieure pure quasi-déployée.

Démonstration. On suppose d'abord que le caractère infinitésimal du paramètre ψ est très régulier, c'est-à-dire que les m_i sont des entiers strictement positifs assez distincts, que l'on a mis dans l'ordre décroissant. Soit $\pi \in \Pi(\mathbf{U}(p,q),\psi)$. Alors π est induit cohomologiquement à partir d'une paire $(\mathfrak{q}, L)$, où L est le c-Levi fixé par l'espace symétrique, si et seulement si les conditions

$$\#\left\{i \in [\![1, 2(r+s)]\!] \,|\, \epsilon_i(\pi) = (-1)^{i-1}\right\} = 2r,$$
$$\#\left\{i \in [\![1, 2(r+s)]\!] \,|\, \epsilon_i(\pi) = (-1)^{i}\right\} = 2s,$$

sont vérifiées.

Posons $t_i = \frac{m_i}{2} - \frac{n-2i+1}{2}$ (c'est la i-ième coordonnée de $\lambda - \rho$ où λ est le caractère infinitésimal, dans un bon système de coordonnées). Les m_i sont entiers, de la parité de $n-1$, et donc les t_i sont entiers. Comme on a supposé les m_i grands et suffisamment distincts, les t_i forment encore une suite strictement décroissante. Considérons le caractère $\pi_L = \pi_L(t_1, -t_1, \dots, t_{r+s}, -t_{r+s}, 0)$ de $L = \mathbf{U}(1)^{2(r+s)} \times \mathbf{U}(r'-r, s'-s)$ trivial sur le facteur $\mathbf{U}(r'-r, s'-s)$ et donné par des entiers $\pm t_i$ sur les facteurs $\mathbf{U}(1)$. Il existe une unique sous-algèbre parabolique θ-stable $\mathfrak{q}_1 = \mathfrak{l} \oplus \mathfrak{u}_1$ de $\mathfrak{g}$ telle que $\pi_L(t_1, -t_1, \dots, t_{r+s}, -t_{r+s}, 0)$ soit dans le good range pour $\mathfrak{q}_1$. Il est clair que $\pi_L \in \mathcal{P}(\mathfrak{q}_1)$. La représentation $\pi = A_{\mathfrak{q}_1}(\pi_L)$ est alors dans le spectre discret de $\mathcal{X}$, et dans $\Pi(\mathbf{U}(p,q),\psi)$. De plus $\epsilon(\pi)$ vérifie les conditions voulues d'après [MR19].

Considérons maintenant un caractère $\pi_L = \pi_L(t_1, -t_1, \dots t_{r+s}, -t_{r+s}, 0)$ pour certains entiers $t_1, \dots, t_{r+s}$ que l'on suppose seulement suffisamment distincts les uns des autres et de leurs opposés. A conjugaison près dans $K = \mathbf{U}(p,0) \times \mathbf{U}(0,q)$ on peut supposer les t_i positifs avec $t_1 > t_2 \dots > t_r$ et $t_{r+1} > t_{r+2} \dots > t_{r+s}$. Ceci détermine une sous algèbre parabolique θ-stable $\mathfrak{q} = \mathfrak{l} \oplus \mathfrak{u}$ de $\mathfrak{g}$ telle que $\pi_L(t_1, -t_1, \dots t_{r+s}, -t_{r+s}, 0)$ soit dans le good range pour $\mathfrak{q}_1$. Si on pose $t'_i = \frac{m_i}{2} - \frac{n-2i+1}{2}$ où la suite $(t'_i)_{i=1,\dots r+s}$ est obtenue à partir des t_i en les mettant dans l'ordre décroissant, alors $\pi = A_{\mathfrak{q}}(\pi_L)$ est dans le paquet $\Pi(\mathbf{U}(p,q),\psi)$ et elle contribue au spectre discret de $\mathcal{X}$ (on fait ici agir un élément de $N_K(\mathfrak{t}_0)\backslash N_{\mathbf{G}}(\mathfrak{t}_0) \simeq \mathfrak{S}_r \times \mathfrak{S}_s \backslash \mathfrak{S}_n$ pour ce ramener au calcul précédent) et de même que ci-dessus, $\epsilon(\pi)$ vérifie la proposition voulue. On peut conclure par un argument de comptage pour montrer que les conditions de la proposition sont suffisantes : le nombre d'éléments du paquet $\Pi(\mathbf{U}(p,q),\psi)$ vérifiant ces conditions est le cardinal de $N_K(\mathfrak{t}_0)\backslash N_{\mathbf{G}}(\mathfrak{t}_0) \simeq \mathfrak{S}_r \times \mathfrak{S}_s \backslash \mathfrak{S}_n$. □

Remarque 8.3. Les résultats de multiplicité un [MR19] impliquent donc ici que le spectre discret de $\mathcal{X}_{r,s}$ à la propriété de multiplicité un.

Remarque 8.4. Un élément du paquet d'Arthur $\Pi(\mathbf{U}(p,q),\psi)$ ne contribue au spectre discret que d'au plus l'un des $\mathcal{X}_{r,s}$ lorsque l'on fait varier r et s .

Cas 4 : $\mathcal{X} = \mathbf{U}(n,n)/\mathbf{GL}(n,\mathbb{C})$. Les paramètres s'écrivent $\psi = \bigoplus_{i=1}^{n}((\chi_{m_i} \oplus \chi_{-m_i}) \boxtimes R[1])$.

PROPOSITION 8.5. *Soit ψ comme ci-dessus et $\pi \in \Pi(\mathbf{U}(n,n),\psi)$. Alors π est dans le spectre discret de $\mathcal{X}$ si et seulement si $\epsilon(\pi) = (\epsilon_1(\pi),\dots,\epsilon_{2n}(\pi))$ vérifie*

$$\#\left\{i \in [\![1,2n]\!] \,|\, \epsilon_i(\pi) = (-1)^{i-1}\right\} = n \text{ et } \epsilon_{2i-1}(\pi)\epsilon_{2i}(\pi) = 1,\ (i = 1,\dots,n).$$

La démonstration est similaire à celle de la proposition 8.2. Il en est de même des propositions analogues des cas qui suivent.

REMARQUE 8.6. Pour $\mathcal{X}' = \mathbf{U}(2r,2s)/\mathbf{U}(r,s) \times \mathbf{U}(r,s)$, les paramètres d'Arthur sont les mêmes que pour $\mathcal{X} = \mathbf{U}(n,n)/\mathbf{GL}(n,\mathbb{C})$ avec $n = r+s$, mais une représentation π d'un tel paquet ne contribue au plus qu'à un seul des deux spectres : celui de $\mathcal{X}$ si $\epsilon(\pi)$ est comme dans la proposition 8.2, et celui de $\mathcal{X}'$ si $\epsilon(\pi)$ est comme dans la proposition 8.5, les deux cas étant mutuellement exclusifs.

On a aussi, comme dans la remarque 8.3, la propriété de multiplicité un du spectre discret.

Cas 5 : $\mathcal{X} = \mathbf{U}(2p,2q)/\mathbf{Sp}(p,q)$. Les paramètres sont de la forme $\psi = \bigoplus_{i=1}^{p+q}(\chi_{m_i} \boxtimes R[2])$.

PROPOSITION 8.7. *Soit ψ comme ci-dessus et $\pi \in \Pi(\mathbf{U}(2p,2q),\psi)$. Alors π est dans le spectre discret de $\mathcal{X}$ si et seulement si $\epsilon_i(\pi) = -1$, $(i = 1,\dots,p+q)$.*

Cas 6 : $\mathcal{X} = \mathbf{U}(n,n)/\mathbf{Sp}(2n,\mathbb{R})$. Les paramètres sont de la forme $\psi = \bigoplus_{i=1}^{n}(\chi_{m_i} \boxtimes R[2])$.

PROPOSITION 8.8. *Soit ψ comme ci-dessus et $\pi \in \Pi(\mathbf{U}(n,n),\psi)$. Alors π est dans le spectre discret de $\mathcal{X}$ si et seulement si $\epsilon(\pi)$ est le caractère trivial.*

REMARQUE 8.9. Pour $\mathcal{X}' = \mathbf{U}(2n,2n)/\mathbf{Sp}(n,n)$, les paramètres d'Arthur sont les mêmes que ci-dessus, mais une représentation d'un tel paquet ne contribue au plus qu'à un seul des deux spectres, celui de $\mathcal{X}$ si $\epsilon_i(\pi) = -1$, (i=1,..., n) , et celui de $\mathcal{X}'$ si $\epsilon(\pi)$ est trivial.

Cas 7 et 8 : $\mathbf{SO}(p,q)/\mathbf{SO}(r,s) \times \mathbf{SO}(r',s')$. Les paramètres sont de la forme

$$\psi = \left(\bigoplus_{i=1}^{r+s} \delta\left(\frac{m_i}{2}, -\frac{m_i}{2}\right) \boxtimes R[1]\right) \oplus (\mathbf{Triv}_{W_{\mathbb{R}}} \boxtimes R[2(n-r-s)]),$$

si $p+q = 2n+1$, et

$$\psi = \left(\bigoplus_{i=1}^{r+s} \delta\left(\frac{m_i}{2}, -\frac{m_i}{2}\right) \boxtimes R[1]\right) \oplus (\mathbf{Triv}_{W_{\mathbb{R}}} \boxtimes R[2(n-r-s)-1]) \oplus (\mathbf{sgn}_{W_{\mathbb{R}}}^{p-n} \boxtimes R[1]),$$

si $p+q = 2n$.

PROPOSITION 8.10. *Soit ψ comme ci-dessus et $\pi \in \Pi(\mathbf{SO}(p,q),\psi)$. Alors π est dans le spectre discret de $\mathcal{X}$ si et seulement si $\epsilon(\pi) = (\epsilon_1(\pi),\dots,\epsilon_{(r+s)}(\pi))$ vérifie*

$$\#\left\{i \in [\![1,(r+s)]\!] \,|\, \epsilon_i(\pi) = (-1)^{i-1}\right\} = r,$$
$$\#\left\{i \in [\![1,(r+s)]\!] \,|\, \epsilon_i(\pi) = (-1)^{i}\right\} = s$$

(rappelons que ceci dépend du choix d'une donnée de Whittaker ou d'une forme intérieure pure quasi-déployée, un autre choix pourrait inverser les deux conditions).

REMARQUE 8.11. En notant $\mathcal{X}_{r,s}$ l'espace symétrique ci-dessus, on peut faire varier r et s, et on a alors le même résultat que dans la remarque 8.4.

Cas 9 : $\mathbf{SO}(2p,2q)/\mathbf{U}(p,q)$. Les paramètres sont de la forme

$$\psi = \bigoplus_{i=1}^{n/2} \delta\left(\frac{m_i}{2}, -\frac{m_i}{2}\right) \boxtimes R[2],$$

si $n = p+q$ est pair et

$$\psi = \left(\bigoplus_{i=1}^{\frac{n-1}{2}} \delta\left(\frac{m_i}{2}, -\frac{m_i}{2}\right) \boxtimes R[2]\right) \oplus (\mathbf{Triv}_{W_{\mathbb{R}}} \boxtimes R[1]) \oplus \left(\mathbf{sgn}_{W_{\mathbb{R}}} \boxtimes R[1]\right),$$

si $n = p+q$ est impair.

PROPOSITION 8.12. *Soit ψ comme ci-dessus et $\pi \in \Pi(\mathbf{SO}(2p,2q),\psi)$. Alors π est dans le spectre discret de $\mathcal{X}$ si et seulement si $\epsilon_i(\pi) = -1$, pour tout $i = 1,\dots n$.*

Cas 10 : $\mathbf{SO}(n,n)/\mathbf{GL}(n,\mathbb{R})$. Les paramètres sont de la forme $\psi = \bigoplus_{i=1}^{\frac{n}{2}} \delta\left(\frac{m_i}{2}, -\frac{m_i}{2}\right) \boxtimes R[2]$, si n est pair et $\psi = \left(\bigoplus_{i=1}^{\frac{n-1}{2}} \delta\left(\frac{m_i}{2}, -\frac{m_i}{2}\right) \boxtimes R[2]\right) \oplus (\mathbf{Triv}_{W_{\mathbb{R}}} \boxtimes R[1]) \oplus (\mathbf{Triv}_{W_{\mathbb{R}}} \boxtimes R[1])$, si n est impair.

PROPOSITION 8.13. *Soit ψ comme ci-dessus et $\pi \in \Pi(\mathbf{SO}(n,n),\psi)$. Alors π est dans le spectre discret de $\mathcal{X}$ si et seulement si $\epsilon(\pi)$ est trivial.*

REMARQUE 8.14. Pour $\mathcal{X}' = \mathbf{SO}(2n,2n)/\mathbf{U}(n,n)$, les paramètres d'Arthur sont les mêmes que ci-dessus, mais une représentation d'un tel paquet ne contribue au plus qu'à un seul des deux spectres, celui de $\mathfrak{X}$ si $\epsilon_i(\pi) = -1$, pour tout $i = 1,\dots n$, et celui de $\mathcal{X}'$ si $\epsilon(\pi)$ est trivial.

Cas 11 : $\mathbf{Sp}(2n,\mathbb{R})/\mathbf{Sp}(2p,\mathbb{R}) \times \mathbf{Sp}(2(n-p),\mathbb{R})$. Les paramètres sont de la forme

$$\psi = \left(\bigoplus_{i=1}^{p} \delta\left(\frac{m_i}{2}, -\frac{m_i}{2}\right) \boxtimes R[2]\right) \oplus (\mathbf{Triv}_{W_{\mathbb{R}}} \boxtimes R[2(n-2p)) + 1])$$

avec les m_i impairs.

PROPOSITION 8.15. *Soit ψ comme ci-dessus et $\pi \in \Pi(\mathbf{Sp}(2n,\mathbb{R}),\psi)$. Alors π est dans le spectre discret de $\mathcal{X}$ si et seulement si $\epsilon(\pi)$ est trivial.*

Cas 12 : $\mathbf{Sp}(4n,\mathbb{R})/\mathbf{Sp}(2n,\mathbb{C})$. Les paramètres sont de la forme

$$\psi = \left(\bigoplus_{i=1}^{n} \delta\left(\frac{m_i}{2}, -\frac{m_i}{2}\right) \boxtimes R[2]\right) \oplus (\mathbf{Triv}_{W_{\mathbb{R}}} \boxtimes R[1])$$

avec les m_i impairs.

PROPOSITION 8.16. *Soit ψ comme ci-dessus et $\pi \in \Pi(\mathbf{Sp}(2n,\mathbb{R}),\psi)$. Alors π est dans le spectre discret de $\mathcal{X}$ si et seulement si $\epsilon_i(\pi) = -1$, pour tout $i = 1,\dots,n$.*

REMARQUES 8.17. Remarquons que le fair range est ici dans le weakly good range. On en déduit que le spectre discret de $\mathcal{X}$ à la propriété de multiplicité un.

— Pour $\mathcal{X}' = \mathbf{Sp}(4n,\mathbb{R})/\mathbf{Sp}(2n,\mathbb{R}) \times \mathbf{Sp}(2n,\mathbb{R})$, les paramètres d'Arthur sont les mêmes que ci-dessus, mais une représentation π d'un tel paquet ne contribue au plus qu'à un seul des deux spectres, celui de $\mathcal{X}$ si $\epsilon_i(\pi) = -1$, pour tout $i = 1,\dots n$, et celui de $\mathcal{X}'$ si $\epsilon(\pi)$ est trivial.

Cas 13 : $\mathbf{Sp}(2n,\mathbb{R})/\mathbf{GL}(n,\mathbb{R})$. Comme dans le cas 2, les séries discrètes de $\mathcal{X}$ sont les séries discrètes de G distinguées par le fait que leur K-type minimal a des invariants non triviaux sous $K \cap H = \mathbf{O}(n)$. Un paquet de Langlands de séries discrètes de $\mathbf{Sp}(2n,\mathbb{R})$ est déterminé par un caractère infinitésimal entier régulier, c'est-à-dire dans un système de coordonnées usuel, un n-uplet $\lambda = (\lambda_1,\dots,\lambda_n)$ où les λ_i forment une suite strictement décroissante constitués d'entiers. Notons $\Pi(\lambda)$ ce paquet de Langlands.

PROPOSITION 8.18. *Soit $\Pi(\lambda)$ comme ci-dessus un paquet de Langlands de séries discrètes de $\mathbf{Sp}(2n,\mathbb{R})$. Alors soit tous les éléments de ce paquet sont des séries discrètes de $\mathcal{X}$, soit aucun ne l'est, et la première éventualité se produit exactement quand les entiers λ_i ont une parité qui alterne en commençant par un nombre impair, c'est-à-dire pour tout $i \in [1,n]$, $\lambda_i \equiv i[2]$.*

REMARQUE 8.19. Si les λ_i ont bien une parité qui alterne mais en commençant par un nombre pair, on trouverait des séries discrètes pour $L^2_d(\mathbf{Sp}(2n,\mathbb{R})/\mathbf{GL}(n,\mathbb{R}))_\chi$ où χ est le caractère $\mathbf{sgn} \circ \det$ de $\mathbf{GL}(n,\mathbb{R})$.

<u>Démonstration</u>. Remarquons que $\rho = (n, n-1, \dots, 1)$ de sorte que $\lambda - \rho$ est toujours un n-uplet d'entiers. Notons $\pi_L(t_1,\dots,t_n)$ le caractère de $L = \mathbf{U}(1)^n$ donné par le n-uplet d'entiers $(t_1,\dots,t_n)$. La série discrète $A_{\mathfrak{q}}(\pi_L(t_1,\dots,t_n))$, où $\mathfrak{q} = \mathfrak{l} \oplus \mathfrak{u}$ est la sous-algèbre de Borel telle que $\pi_L(t_1,\dots,t_n)$ soit dans le good range pour $\mathfrak{q}$ admet un K-type minimal ayant des invariants non triviaux sous $K \cap H = \mathbf{O}(n)$ si et seulement si $\pi_L \otimes \bigwedge^{\mathrm{top}}(\mathfrak{u} \cap \mathfrak{p})$ a une restriction triviale à $L \cap K \cap H = \{\pm 1\}^n$. Or on calcule facilement le caractère $\bigwedge^{\mathrm{top}}(\mathfrak{u} \cap \mathfrak{p})$ de

$L \cap H \cap K$: dans le système de coordonnées usuel où les racines (toutes imaginaires) sont les $\pm e_i \pm e_j$, $1 \leq i < j \leq n$, $\pm 2e_i$, $1 \leq i \leq n$, les racines compactes étant les $\pm(e_i - e_j)$. Les racines non compactes longues positives ($\pm 2e_i$, selon le signe de t_i) ont une restriction triviale à $L \cap K \cap H$ et la contribution des racines non compactes courtes positives ($\pm(e_i + e_j)$, selon le signe de $t_i + t_j$) donne le caractère $\mathbf{sgn}^{n-1}$ sur chaque facteur $\{\pm 1\}$ de $L \cap K \cap H$. Ainsi la condition cherchée est que les t_i sont tous pairs si n est impair, et tous impairs si n est pair. On en déduit le résultat. □

9. Le sous-groupe L

Dans cette section, nous déterminons le sous-groupe $L = \mathrm{Cent}_G(\mathfrak{t}_0)$ (*cf.* section 2.4) par un argument de réduction au rang un, et nous commençons par là. On utilise aussi le fait que l'on connait la forme générale des c-Levi des groupes classiques :

$G = \mathbf{GL}(n,\mathbb{R})$, $L \simeq (\prod_{i=1}^m \mathbf{GL}(a_i,\mathbb{C})) \times \left(\prod_{j=1}^s \mathbf{GL}(a'_j,\mathbb{R})\right)$, avec $2\sum_{i=1}^m a_i + \sum_{j=1}^s a'_j = n$,

$G = \mathbf{U}(p,q)$, $L \simeq \prod_{i=1}^s \mathbf{U}(p_i,q_i)$, avec $\sum_{i=1}^s (p_i,q_i) = (p,q)$,

$G = \mathbf{Sp}(2n,\mathbb{R})$, $L \simeq (\prod_{i=1}^s \mathbf{U}(p_i,q_i)) \times \mathbf{Sp}(2a,\mathbb{R})$, avec $2\,(\sum_{i=1}^s p_i + q_i) + a = n$,

$G = \mathbf{SO}(p,q)$, $L \simeq (\prod_{i=1}^s \mathbf{U}(p_i,q_i)) \times \mathbf{SO}(r,s)$, avec $\sum_{i=1}^s (2p_i, 2q_i) + (r,s) = (p,q)$.

9.1. *Le rang un.* Nous calculons L au cas par cas.

Cas 1 : $\mathcal{X} = \mathbf{GL}(2,\mathbb{R})/\mathbf{GL}(1,\mathbb{R}) \times \mathbf{GL}(1,\mathbb{R})$. Le sous-groupe H est le sous-groupe des matrices diagonales de $\mathbf{GL}(2,\mathbb{R})$. Un sous-espace de Cartan compact pour $\mathcal{X}$ est l'espace $\mathfrak{t}_0$ des matrices antisymétriques et son centralisateur L dans G est $L = \left\{ \begin{pmatrix} a & b \\ -b & a \end{pmatrix},\ a,b \in \mathbb{R},\ a^2+b^2 \neq 0 \right\}$. Ce groupe L est isomorphe à $\mathbb{C}^\times$, et $L \cap H = \left\{ \begin{pmatrix} a & 0 \\ 0 & a \end{pmatrix},\ a \in \mathbb{R}^\times \right\} \simeq \mathbb{R}^\times$.

Cas 2 : $\mathcal{X} = \mathbf{U}(1)/\mathbf{O}(1)$. Ce cas est trivial. On a $L = \mathbf{U}(1)$ et $L \cap H = H = \mathbf{O}(1)$.

Cas 3 : $\mathcal{X} = G/H = \mathbf{U}(2)/\mathbf{U}(1) \times \mathbf{U}(1)$. On réalise G comme l'ensemble des matrices carrées de taille 2 à coefficients complexes M telles que ${}^t\bar{M}M = I_2$, et H est le sous-groupe diagonal. L'involution σ est la conjugaison par $\begin{pmatrix} 1 & 0 \\ 0 & -1 \end{pmatrix}$, et le sous-espace propre $\mathfrak{s}$ de σ dans $\mathfrak{g}$ pour la valeur propre -1 est l'ensemble des matrices antihermitiennes. Un sous-espace de Cartan est donc donné par

$\mathfrak{t}_0 = \left\{ \begin{pmatrix} 0 & \lambda \\ -\lambda & 0 \end{pmatrix},\ \lambda \in \mathbb{R} \right\}$. On a respectivement

$$L = \left\{ \begin{pmatrix} z\cos\theta & z\sin\theta \\ -z\sin\theta & z\cos\theta \end{pmatrix},\ \begin{matrix} \theta \in \mathbb{R} \\ z \in \mathbf{U}(1) \end{matrix} \right\} \simeq \mathbf{U}(1) \times \mathbf{U}(1),$$

$$L \cap H = \left\{ \begin{pmatrix} z & 0 \\ 0 & z \end{pmatrix},\ z \in \mathbf{U}(1) \right\} \simeq \mathbf{U}(1).$$

Cas 4 : $\mathcal{X} = \mathbf{U}(1,1)/\mathbf{GL}(1,\mathbb{C})$. On réalise $\mathbf{U}(1,1)$ comme le sous-groupe de $\mathbf{GL}(2,\mathbb{C})$ préservant la forme hermitienne $q : (x,y) \mapsto \bar{x}y + x\bar{y}$. Le sous groupe $H = \mathbf{GL}(1,\mathbb{C})$ est alors réalisé comme l'ensemble des matrices $\begin{pmatrix} \lambda & 0 \\ 0 & \bar{\lambda}^{-1} \end{pmatrix}$, $\lambda \in \mathbb{C}^\times$. L'involution σ est la conjugaison par la matrice $\begin{pmatrix} 1 & 0 \\ 0 & -1 \end{pmatrix}$. Le sous-espace propre de σ pour la valeur propre -1 dans $\mathfrak{g}_0$ et un sous-espace de Cartan sont donnés respectivement par

$$\mathfrak{s}_0 = \left\{ \begin{pmatrix} 0 & b \\ c & 0 \end{pmatrix},\ b, c \in \mathbb{R} \right\}, \quad \mathfrak{t}_0 = \left\{ \begin{pmatrix} 0 & b \\ b & 0 \end{pmatrix},\ b \in \mathbb{R} \right\}.$$

Le centralisateur L dans G de $\mathfrak{t}_0$ est

$$\begin{aligned} L &= \left\{ \begin{pmatrix} a & b \\ b & a \end{pmatrix},\ a\bar{a} + b\bar{b} = 1,\ a\bar{b} + \bar{a}b = 0 \right\} \\ &= \left\{ \begin{pmatrix} \frac{z_1+z_2}{2} & \frac{z_1-z_2}{2} \\ \frac{z_1-z_2}{2} & \frac{z_1+z_2}{2} \end{pmatrix}, z_1, z_2 \in \mathbf{U}(1) \right\} \simeq \mathbf{U}(1) \times \mathbf{U}(1), \end{aligned}$$

et $L \cap H = \left\{ \begin{pmatrix} z & 0 \\ 0 & z \end{pmatrix},\ z \in \mathbf{U}(1) \right\} \simeq \mathbf{U}(1)$.

Cas 5 : $\mathcal{X} = G/H = \mathbf{U}(2,0)/\mathbf{Sp}(1,0) = \mathbf{U}(2)/\mathbf{SU}(2)$. Ici le sous-espace de Cartan $\mathfrak{t}_0$ est central et donc $L = G = \mathbf{U}(2)$.

Cas 6 : $\mathcal{X} = G/H = \mathbf{U}(1,1)/\mathbf{Sp}(2,\mathbb{R}) = \mathbf{U}(1,1)/\mathbf{SU}(1,1)$. Ici le sous-espace de Cartan $\mathfrak{t}_0$ est central, et donc $L = G = \mathbf{U}(1,1)$.

Cas 7 et 8 : $\mathcal{X} = G/H = \mathbf{SO}(2)/\mathbf{SO}(1) \times \mathbf{SO}(1)$. Ce cas est trivial

Cas 9: $\mathbf{SO}(4)/\mathbf{U}(2)$. On réalise $\mathbf{SO}(4)$ de la façon suivante : soit $\mathcal{M} = \left\{ \begin{pmatrix} a & b \\ -\bar{b} & \bar{a} \end{pmatrix},\ a, b \in \mathbb{C} \right\}$, que l'on peut voir soit comme un espace vectoriel réel de dimension 4, muni de la forme quadratique euclidienne donnée par le déterminant, soit comme un espace complexe de dimension 2, muni de la forme hermitienne, elle aussi donnée par le déterminant. On note $\mathcal{M}^\times$ les éléments inversibles de $\mathcal{M}$, et l'on pose $G = \{(h,h') \in \mathcal{M}^\times \times \mathcal{M}^\times,\ \det(h) = \det(h')\} / \sim$, la relation d'équivalence $\sim$ étant définie par $(h,h') \sim (\lambda h, \lambda h')$, $h, h' \in \mathcal{M}^\times$, $\lambda \in \mathbb{R}^\times$. L'action de $(h,h') \in \mathcal{M}^\times \times \mathcal{M}^\times$ sur $m \in \mathcal{M}$ est donnée par :

$(h,h')\cdot m = hm(h')^{-1}$. Elle passe au quotient et définit une action de G sur $\mathcal{M}$ qui identifie G et $\mathbf{SO}(\mathcal{M}) = \mathbf{SO}(4)$.

Soit H le sous-groupe de G des éléments qui commutent à l'action de $\mathbb{C}^\times$ sur $\mathcal{M}$ donnée par la multiplication à gauche par la matrice $\begin{pmatrix}\lambda & 0\\ 0 & \bar\lambda\end{pmatrix}$, pour tout $\lambda\in\mathbb{C}$. Ainsi

$$H = \left\{\left(\begin{pmatrix}a & 0\\ 0 & \bar a\end{pmatrix}, h'\right),\ a\in\mathbb{C}^\times,\ h'\in\mathcal{M}^\times,\ \det(h') = a\bar a\right\}/\sim .$$

Son action sur $\mathcal{M}$ l'identifie à $\mathbf{U}(\mathcal{M}) = \mathbf{U}(2)$. Notons $\mathrm{Det}\left(\begin{pmatrix}a & 0\\ 0 & \bar a\end{pmatrix}, h'\right) = \frac{a}{\bar a}$. C'est le déterminant usuel via cette identification. L'involution σ de G dont H est le sous-groupe des points fixes est donnée par la conjugaison sur le premier facteur de $\mathcal{M}^\times\times\mathcal{M}^\times$ par la matrice $\begin{pmatrix}1 & 0\\ 0 & -1\end{pmatrix}$. Les algèbres de Lie $\mathfrak{g}$ et $\mathfrak{h}$ de G et H sont respectivement :

$$\mathfrak{g} = \{(X,X')\in\mathcal{M}\times\mathcal{M},\ \mathrm{Tr}\,(X) = \mathrm{Tr}\,(X')\}/\sim,$$

$$\mathfrak{h} = \left\{\left(\begin{pmatrix}\alpha & 0\\ 0 & \bar\alpha\end{pmatrix}, X'\right),\ \alpha\in\mathbb{C},\ X'\in\mathcal{M},\ \mathrm{Tr}\,(X) = \alpha+\bar\alpha\right\}/\sim .$$

L'espace propre $\mathfrak{s}$ pour la valeur propre -1 de σ dans $\mathfrak{g}$ et le sous-espace de Cartan $\mathfrak{t}$ de $\mathfrak{s}$ sont donnés par

$$\mathfrak{s} = \left\{\left(\begin{pmatrix}0 & \beta\\ -\bar\beta & 0\end{pmatrix}, 0\right),\ \beta\in\mathbb{C}\right\}/\sim,\quad \mathfrak{t} = \left\{\left(\begin{pmatrix}0 & \beta\\ -\beta & 0\end{pmatrix}, 0\right),\ \beta\in\mathbb{R}\right\}/\sim .$$

On trouve alors

$$L = \left\{\left(\begin{pmatrix}a & b\\ -b & a\end{pmatrix}, h'\right),\ a,b\in\mathbb{R},\ h'\in\mathcal{M}^\times,\ \det(h') = a^2+b^2\right\}/\sim\simeq \mathbf{U}(2),$$

et

$$L\cap H = \left\{\left(\begin{pmatrix}a & 0\\ 0 & a\end{pmatrix}, h'\right),\ a\in\mathbb{R}^\times,\ h'\in\mathcal{M}^\times,\ \det(h') = a^2\right\}/\sim\simeq \mathbf{SU}(2).$$

Cas 10 : $\mathbf{SO}(2,2)/\mathbf{GL}(2,\mathbb{R})$. On pose $\mathcal{M} = \mathcal{M}_2(\mathbb{R})$ que l'on munit de la forme quadratique donnée par le déterminant, dont la signature est ici $(2,2)$. On définit alors G et son action sur $\mathcal{M}$ comme dans le cas précédent. Notons que $\mathcal{M}^\times = \mathbf{GL}(2,\mathbb{R})$. Ceci identifie G avec $\mathbf{SO}(2,2)$. Soit H le sous-groupe de G défini par

$$H = \left\{\left(\begin{pmatrix}a & 0\\ 0 & b\end{pmatrix}, h'\right),\ a,b\in\mathbb{R}^\times,\ h'\in\mathcal{M}^\times,\ \det(h') = ab\right\}/\sim .$$

Ce groupe s'identifie de manière évidente à $\mathbf{GL}(2,\mathbb{R})$ et $\mathrm{Det}\ :\ H\longrightarrow \mathbb{R}^\times, \left(\begin{pmatrix}a & 0\\ 0 & b\end{pmatrix}, h'\right)\mapsto \frac{b}{a}$ s'identifie au déterminant usuel. L'involution σ de G dont H est le sous-groupe des points fixes est donnée par la conjugaison

sur le premier facteur de $\mathcal{M}^\times \times \mathcal{M}^\times$ par la matrice $\begin{pmatrix} 1 & 0 \\ 0 & -1 \end{pmatrix}$. Les algèbres de Lie $\mathfrak{g}$ et $\mathfrak{h}$ de G et H sont respectivement :

$$\mathfrak{g} = \{(X, X') \in \mathcal{M} \times \mathcal{M},\ \mathrm{Tr}\,(X) = \mathrm{Tr}\,(X')\} \,/\, \sim,$$

$$\mathfrak{h} = \left\{ \left(\begin{pmatrix} \alpha & 0 \\ 0 & \beta \end{pmatrix}, X' \right),\ \alpha, \beta \in \mathbb{C},\ X' \in \mathcal{M},\ \mathrm{Tr}\,(X) = \alpha + \beta \right\} / \sim$$

L'espace propre $\mathfrak{s}$ pour la valeur propre -1 de σ dans $\mathfrak{g}$ et le sous-espace de Cartan $\mathfrak{t}$ de $\mathfrak{s}$ sont donnés par

$$\mathfrak{s} = \left\{ \left(\begin{pmatrix} 0 & \alpha \\ -\beta & 0 \end{pmatrix}, 0 \right),\ \alpha, \beta \in \mathbb{R} \right\} / \sim, \quad \mathfrak{t} = \left\{ \left(\begin{pmatrix} 0 & \beta \\ -\beta & 0 \end{pmatrix}, 0 \right),\ \beta \in \mathbb{R} \right\} / \sim .$$

Son centralisateur dans G est le sous-groupe

$$L = \left\{ \left(\begin{pmatrix} a & b \\ -b & a \end{pmatrix}, h' \right),\ a, b \in \mathbb{R},\ h' \in \mathcal{M}^\times,\ \det(h') = a^2 + b^2 \right\} / \sim \simeq \mathbf{U}(1,1),$$

et

$$L \cap H = \left\{ \left(\begin{pmatrix} a & 0 \\ 0 & a \end{pmatrix}, h' \right),\ a \in \mathbb{R}^\times,\ h' \in \mathcal{M}^\times,\ \det(h') = a^2 \right\} / \sim \simeq \mathbf{SU}(1,1).$$

Cas 11 : $\mathcal{X} = G/H = \mathbf{Sp}(4,\mathbb{R})/\mathbf{Sp}(2,\mathbb{R}) \times \mathbf{Sp}(2,\mathbb{R})$. On réalise $\mathbf{Sp}(4,\mathbb{R})$ comme l'ensemble des matrices M dans $\mathbf{GL}(4,\mathbb{R})$ telle que ${}^tMJM = J$, où

$$J = \begin{pmatrix} 0 & 1 & 0 & 0 \\ -1 & 0 & 0 & 0 \\ 0 & 0 & 0 & -1 \\ 0 & 0 & 1 & 0 \end{pmatrix}.$$

L'involution σ est la conjugaison par la matrice $\begin{pmatrix} I_2 & 0_2 \\ 0_2 & -I_2 \end{pmatrix}$. Un sous-espace de Cartan est

$$\mathfrak{t}_0 = \left\{ \tau(a) = \begin{pmatrix} 0 & 0 & a & 0 \\ 0 & 0 & 0 & -a \\ -a & 0 & 0 & 0 \\ 0 & a & 0 & 0 \end{pmatrix},\ a \in \mathbb{R} \right\}$$

et son centralisateur L dans G est l'ensemble des éléments commutant avec la matrice $\tau = \tau(1)$. On remarque que ${}^t\tau = \tau^{-1} = -\tau$. Les éléments M de $\mathbf{Sp}(4,\mathbb{R})$ commutant avec τ vérifient alors ${}^tM(-\tau)JM = (-\tau)J$, et préservent donc la forme bilinéaire symétrique définie par la matrice symétrique $-\tau J$. La forme symplectique définie par J et la forme bilinéaire symétrique définie par $-\tau J$ sont respectivement

$$((x,y,z,t),(x',y',z',t')) \mapsto xy' - yx' - zt' + tz',$$
$$((x,y,z,t),(x',y',z',t')) \mapsto xt' + yz' + zy' + tx'.$$

Identifions $\mathbb{R}^4$ et $\mathbb{C}^2$ via $(x,y,z,t) \mapsto (x+iz, t+iy)$. Les éléments de L préservent alors la forme hermitienne $\langle (x+iz,t+iy),(x'+iz',t'+iy')\rangle = (\overline{x+iz})(t'+iy') + (\overline{t+iy})(x'+iz')$ de signature $(1,1)$. On peut remonter les calculs et voir que les éléments de $\mathbf{Sp}(4,\mathbb{R})$ qui préservent cette forme hermitienne sont exactement ceux de L. Ainsi $L \simeq \mathbf{U}(1,1)$ et l'on vérifie que $L \cap H = \mathbf{SU}(1,1)$ dans cette identification.

Cas 12 : $\mathcal{X} = G/H = \mathbf{Sp}(4,\mathbb{R})/\mathbf{Sp}(2,\mathbb{C})$. On identifie $\mathbb{C}$ et $\mathbb{R}^2$ à

$$\mathcal{E} = \left\{ X = \begin{pmatrix} x_1 & x_2 \\ -x_2 & x_1 \end{pmatrix}, x_1, x_2, \in \mathbb{R} \right\}$$

et $H = \mathbf{SL}(2,\mathbb{C})$ à l'ensemble des matrices $\begin{pmatrix} \alpha & \beta \\ \gamma & \delta \end{pmatrix}$, $\alpha,\beta,\gamma,\delta \in \mathcal{E}$, $\alpha\delta - \beta\gamma = \begin{pmatrix} 1 & 0 \\ 0 & 1 \end{pmatrix}$. C'est le groupe de symétrie de la forme symplectique sur $\mathcal{E}^2$ définie par

$$\begin{aligned} &\omega\left(\begin{pmatrix} X \\ Y \end{pmatrix}, \begin{pmatrix} X' \\ Y' \end{pmatrix}\right) = XY' - YX' \\ &= \begin{pmatrix} x_1y_1' - x_2y_2' - y_1x_1' + y_2x_2' & x_2y_1' + x_1y_2' - y_2x_1' - y_1x_2' \\ -x_2y_1' - x_1y_2' + y_2x_1' + y_1x_2' & x_1y_1' - x_2y_2' - y_1x_1' + y_2x_2'. \end{pmatrix}. \end{aligned}$$

Introduisons les deux formes symplectiques réelles sur $\mathbb{R}^4$ données par les parties réelles et imaginaires de ω:

$$\begin{aligned} \omega_1\left({}^t(x_1,x_2,y_1,y_2), {}^t(x_1',x_2',y_1',y_2')\right) &= x_1y_1' - x_2y_2' - y_1x_1' + y_2x_2', \\ \omega_2\left({}^t(x_1,x_2,y_1,y_2), {}^t(x_1',x_2',y_1',y_2')\right) &= x_2y_1' + x_1y_2' - y_2x_1' - y_1x_2', \end{aligned}$$

et les matrices correspondantes

$$J_1 = \begin{pmatrix} 0 & 0 & 1 & 0 \\ 0 & 0 & 0 & -1 \\ -1 & 0 & 0 & 0 \\ 0 & 1 & 0 & 0 \end{pmatrix}, \qquad J_2 = \begin{pmatrix} 0 & 0 & 0 & 1 \\ 0 & 0 & 1 & 0 \\ 0 & -1 & 0 & 0 \\ -1 & 0 & 0 & 0 \end{pmatrix}.$$

Remarquons que

$$(9.1) \qquad {}^tJ_1 = J_1^{-1} = -J_1, \quad {}^tJ_2 = J_2^{-1} = -J_2, \quad J_1J_2 = -J_2J_1.$$

Soient σ_1 et σ_2 les involutions de $\mathbf{GL}(4,\mathbb{R})$ définies par :

$$\sigma_1(g) = J_1({}^tg^{-1})J_1^{-1}, \quad \sigma_2(g) = J_2({}^tg^{-1})J_2^{-1}.$$

Soit G la réalisation de $\mathbf{Sp}(4,\mathbb{R})$ donnée par la première de ces formes, c'est-à-dire

$$G = \left\{ g \in \mathbf{GL}(4,\mathbb{R}) \,|\, {}^tgJ_1g = J_1 \right\}.$$

C'est le groupe des points fixes de σ_1. Les relations (9.1) impliquent que les involutions σ_1, σ_2, et θ (l'involution de Cartan $g \mapsto {}^tg^{-1}$) commutent, et G est donc stable par θ et σ_2. Soit H le sous-groupe des points fixes de σ_2 dans

G. Il s'identifie comme ci-dessus avec $\mathbf{SL}(2,\mathbb{C})$. Sur les algèbres de Lie, on obtient les décompositions

$$\mathfrak{g}_0 = \mathfrak{k}_0 \overset{\theta}{\oplus} \mathfrak{p}_0, \quad \mathfrak{g}_0 = \mathfrak{h}_0 \overset{\sigma_2}{\oplus} \mathfrak{s}_0, \quad \mathfrak{g}_0 = \mathfrak{k}_0 \cap \mathfrak{h}_0 \oplus \mathfrak{p}_0 \cap \mathfrak{h}_0 \oplus \mathfrak{k}_0 \cap \mathfrak{s}_0 \oplus \mathfrak{p}_0 \cap \mathfrak{s}_0.$$

Ici

$$\mathfrak{k}_0 \cap \mathfrak{s}_0 = \mathfrak{t}_0 = \left\{ \begin{pmatrix} 0 & 0 & b & 0 \\ 0 & 0 & 0 & -b \\ -b & 0 & 0 & 0 \\ 0 & b & 0 & 0 \end{pmatrix}, b \in \mathbb{R}, \right\}$$

est un sous-espace de Cartan. Son centralisateur dans G est le c-Levi $L = \{g \in G \,|\, gJ_1 = J_1 g\}$, car J_1 est un élément générique de $\mathfrak{t}_0$, et finalement, on trouve

$$L = \{g \in G \,|\, {}^t g^{-1} = g\} = K.$$

Ainsi L est le compact maximal de $\mathbf{Sp}(4,\mathbb{R})$, donc isomorphe à $\mathbf{U}(2)$, et par cet isomorphisme $L \cap H$ devient $\mathbf{SU}(2)$.

Cas 13 : $\mathcal{X} = G/H = \mathbf{Sp}(2,\mathbb{R})/\mathbf{GL}(1,\mathbb{R})$. Un sous-espace de Cartan est $\mathfrak{t}_0 = \left\{ \begin{pmatrix} 0 & a \\ -a & 0 \end{pmatrix}, a \in \mathbb{R} \right\}$ et $L = \left\{ \begin{pmatrix} \cos\theta & \sin\theta \\ -\sin\theta & \cos\theta \end{pmatrix}, \theta \in \mathbb{R} \right\} \simeq \mathbf{U}(1)$, $L \cap H = \{\pm I_2\}$.

9.2. *Le cas général.* Le calcul de L en rang quelconque se ramène au rang un par un argument général que nous détaillons seulement dans le cas 1. L'involution σ est la conjugaison par la matrice diagonale dont les coefficients sont

$$(\underbrace{1,-1,1,-1\ldots,1,-1}_{2p},\underbrace{1,\ldots,1}_{n-2p}).$$

On introduit le sous-groupe $G' = \mathbf{GL}(2,\mathbb{R})^p \times \mathbf{GL}(n-2p,\mathbb{R})$, stable par l'involution σ, et l'involution de Cartan θ, de sorte que $H' = G' \cap H = (\mathbf{GL}(1,\mathbb{R}) \times \mathbf{GL}(1,\mathbb{R}))^p \times \mathbf{GL}(n-2p,\mathbb{R})$. L'espace symétrique $\mathcal{X}' = G'/H'$ est alors isomorphe à $(\mathbf{GL}(2,\mathbb{R})/\mathbf{GL}(1,\mathbb{R}) \times \mathbf{GL}(1,\mathbb{R}))^p$, c'est-à-dire un produit d'espaces de rang un étudiés dans la section précédente. Soit $\mathfrak{t}_0$ un sous-espace de Cartan compact de $\mathfrak{g}_0'$ pour l'espace symétrique $\mathcal{X}'$, et soit L' son centralisateur dans G'. D'après les calculs de la section 9.1, L' est isomorphe à un produit $(\mathbb{C}^\times)^p \times \mathbf{GL}(n-2p,\mathbb{R})$. Par égalité des rangs de $\mathcal{X}$ et $\mathcal{X}'$ (tous deux égaux à p), $\mathfrak{t}_0$ est encore un sous-espace de Cartan compact de $\mathfrak{g}$ pour l'espace symétrique $\mathcal{X}$, et son centralisateur L dans G contient bien sur L'. Or les considérations de la remarque 4.3 nous donnent l'isomorphie des complexifiés de L' et L et le fait que L est produit de groupes généraux linéaires complexes et réels. Ceci implique alors l'égalité de L et L', et de plus $L \cap H = L' \cap H = L' \cap H'$. Pour résumer, on a donc

$$L = \left(\mathbb{C}^\times\right)^p \times \mathbf{GL}(n-2p,\mathbb{R}), \quad L \cap H = (\mathbb{R}^\times)^p \times \mathbf{GL}(n-2p,\mathbb{R}).$$

Dans les autres cas, le résultat des calculs est indiqué dans la Table 2.

REMARQUE 9.1. Dans le cas 3 et 4, pour l'inclusion des facteurs $\mathbf{U}(1)$ de $L \cap H$ dans le facteur $\mathbf{U}(1) \times \mathbf{U}(1)$, voir le cas de rang 1.

REFERENCES

[ABV92] J. Adams, D. Barbasch and D. A. Vogan, Jr., The Langlands classification and irreducible characters for real reductive groups, Progr. Math., vol. 104, Birkhäuser Boston, Inc., Boston, MA, 1992.

[Art84] J. Arthur, *On some problems suggested by the trace formula*, in: Lie group representations, II (College Park, Md., 1982/1983), Lecture Notes in Math., vol. **1041**, Springer, Berlin, 1984, pp. 1–49.

[CM93] D. H. Collingwood and W. M. McGovern, Nilpotent orbits in semisimple Lie algebras, Van Nostrand Reinhold Mathematics Series, Van Nostrand Reinhold Co., New York, 1993.

[FJ80] M. Flensted-Jensen, *Discrete series for semisimple symmetric spaces*, Ann. of Math. (2) **111** (1980), 253–311.

[KV95] A. W. Knapp and D. A. Vogan, Jr., Cohomological induction and unitary representations, Princeton Mathematical Series, vol. **45**, Princeton University Press, Princeton, NJ, 1995.

[KS17] F. Knop and B. Schalke, *The dual group of a spherical variety*, Trans. Moscow Math. Soc. **78** (2017), 187–216.

[Kos61] B. Kostant, *Lie algebra cohomology and the generalized Borel-Weil theorem*, Ann. of Math. (2) **74** (1961), 329–387.

[Lan89] R. P. Langlands, *On the classification of irreducible representations of real algebraic groups*, in: Representation theory and harmonic analysis on semisimple Lie groups, Math. Surveys Monogr., vol. **31**, Amer. Math. Soc., Providence, RI, 1989, pp. 101–170.

[MR19] C. Mœglin and D. Renard, *Sur les paquets d'Arthur des groupes unitaires et quelques conséquences pour les groupes classiques*, Pacific J. Math. **299** (2019), 53–88.

[MR20] C. Mœglin and D. Renard, *Sur les paquets d'Arthur des groupes classiques réels*, J. Eur. Math. Soc. (JEMS) **22** (2020), 1827–1892.

[OM84] T. Ōshima and T. Matsuki, *A description of discrete series for semisimple symmetric spaces*, in: *Group representations and systems of differential equations (Tokyo, 1982)*, Adv. Stud. Pure Math., vol. **4**, North-Holland, Amsterdam, 1984, pp. 331–390.

[SV17] Y. Sakellaridis and A. Venkatesh, *Periods and harmonic analysis on spherical varieties*, Astérisque (2017), no. 396, p. viii+360.

[Sch83] H. Schlichtkrull, *The Langlands parameters of Flensted-Jensen's discrete series for semisimple symmetric spaces*, J. Functional Analysis **50** (1983), 133–150.

[SV80] B. Speh and D. A. Vogan, Jr., *Reducibility of generalized principal series representations*, Acta Math. **145** (1980), 227–299.

[Vog81] D. A. Vogan, Jr., Representations of real reductive Lie groups, Progress in Mathematics, vol. **15**, Birkhäuser, Boston, Mass., 1981.

[Vog86] D. A. Vogan, Jr., *The unitary dual of* $\mathrm{GL}(n)$ *over an Archimedean field*, Invent. Math. **83** (1986), 449–505.

[Vog88] D. A. Vogan, Jr., *Irreducibility of discrete series representations for semisimple symmetric spaces*, in: Representations of Lie groups, Kyoto, Hiroshima, 1986, Adv. Stud. Pure Math., vol. **14**, Academic Press, Boston, MA, 1988, pp. 191–221.

[Wal10] J.-L. Waldspurger, *Les facteurs de transfert pour les groupes classiques: un formulaire*, Manuscripta Math. **133** (2010), pp. 41–82.
[Wik] Wikipedia, *Symmetric spaces*, https://en.wikipedia.org/wiki/Symmetric_space#Classification_results.

Diskretne serije simetričnih prostora i Arthurovi paketi

Colette Moeglin i David Renard

Sažetak. U ovom radu provjeravamo Sakellaridis-Venkatesh slutnju dajući opis diskretnog sprektra sferičke mnogostrukosti $\mathcal{X} = G/H$ u terminima Langlands-Arthurovog formalizma kada je G klasična realna grupa i $\mathcal{X}$ simetrični prostor. Nadalje, eksplicitno određujemo reprezentacije u relevantnim Arthurovim paketima koji se pojavljuju u diskretnom spektru i dobijamo određene rezultate multipliciteta jedan.

Colette Moeglin
CNRS, Institut Mathématique de Jussieu
Paris, France
E-mail: colette.moeglin@imj-prg.fr

David Renard
Centre de Mathématiques Laurent Schwartz, Ecole Polytechnique
Palaiseau, France
E-mail: david.renard@polytechnique.edu

Received: 17.3.2023.
Revised: 17.6.2023.
Accepted: 19.9.2023.

RAD HAZU. MATEMATIČKE ZNANOSTI
Vol. 28 = 558 (2024): 405-423
DOI: https://doi.org/10.21857/mjrl3uo0x9

JACQUET TENSORS

Dubravka Ban

Dedicated to Prof. Marko Tadić on the occasion of his 70th birthday.

Abstract. Let G be a split reductive p-adic group. The category of admissible p-adic Banach space representations of G is equivalent to the corresponding category of finitely generated Iwasawa modules, via the duality map $V \mapsto V'$. In this paper, we define certain tensors on Iwasawa modules, which are intended to play the role of Jacquet modules. We describe some properties of Jacquet tensors and show how they can be applied to the study of principal series representations.

1. Introduction

Let L be a p-adic field and let G be the L-points of a split reductive group. Parabolic induction is one of the basic methods for constructing representations. Let P be a parabolic subgroup of G, with Levi decomposition $P = MU$. Denote by $\mathrm{Rep}^{\mathrm{sm}}(G)$ and $\mathrm{Rep}^{\mathrm{sm}}(M)$ the categories of smooth representations of G and M, respectively. The normalized parabolic induction

$$i_{G,M} : \mathrm{Rep}^{\mathrm{sm}}(M) \to \mathrm{Rep}^{\mathrm{sm}}(G)$$

and the normalized Jacquet functor

$$r_{M,G} : \mathrm{Rep}^{\mathrm{sm}}(G) \to \mathrm{Rep}^{\mathrm{sm}}(M)$$

are a pair of adjoint exact functors [8, 10]. Moreover, they give rise to some nice algebraic structures on the Grothendieck group of $\mathrm{Rep}^{\mathrm{sm}}(G)$: a graded Hopf algebra for general linear groups, defined by Zelevinsky in [21], and a Ψ-Hopf module for classical groups, defined by Tadić in [20]. The module and comodule structures are related by a combinatorial formula, which can be used to obtain Jacquet modules of parabolically induced representations in a simple way. This method has been essential for proving numerous results,

2020 *Mathematics Subject Classification.* 22E50, 11F70.
Key words and phrases. p-adic Banach space representations, p-adic groups, Iwasawa modules, Jacquet modules.

among them the classification of discrete series representations of classical p-adic groups [16], supports of induced representations [14], and the structure and reducibility of degenerate principal series [6].

Parabolic induction can also be defined for locally analytic and Banach space representations over p-adic fields. The Jacquet functor for locally analytic representations defined by Emerton in [12] and the ordinary part functor defined in [13] have some of the properties of the classical Jacquet functor, but there is no simple and operative theory similar to the one in classical case.

Let K be a finite extension of L. The Iwasawa algebra $K[[G]]$ is defined in Section 2.2. If V is a K-Banach space representation of G, then its dual V' is a $K[[G]]$-module. We say that V is admissible if V' is finitely generated as a $K[[H]]$-module for some compact open subgroup H of G. The duality map $V \mapsto V'$ is an anti-equivalence between the corresponding categories [19], and we can study admissible K-Banach space representations of G by considering the corresponding $K[[G]]$-modules.

The parabolic induction has a nice description on the dual side. In particular, if P is a Borel subgroup of G and $\chi : P \to K^\times$ is a continuous character, then the dual of the continuous principal series induced by χ^{-1} is isomorphic to $M^{(\chi)} = K[[G]] \otimes_{K[[P]]} K^{(\chi)}$, where $K^{(\chi)}$ is the field K equipped with the $K[[P]]$-module structure given by χ [4, Theorem 7.12].

In this paper, we study

$$K[[T]] \otimes_{K[[P]]} M^{(\chi)}.$$

We call such tensor products *Jacquet tensors*. We prove the following properties:

THEOREM 1.1. *Let $\chi : P \to K^\times$ be a continuous character and $M^{(\chi)} = K[[G]] \otimes_{K[[P]]} K^{(\chi)}$.*

(i) The elements $1 \otimes \dot{w} \otimes 1$, where $w \in W$, are linearly independent in $K[[T]] \otimes_{K[[P]]} M^{(\chi)}$.

(ii) As a $K[[T]]$-module, $K(1 \otimes \dot{w} \otimes 1) \cong K^{(w\chi)}$.

(iii) The image of $K[G] \otimes_{K[P]} K^{(\chi)}$ in $K[[T]] \otimes_{K[[P]]} M^{(\chi)}$ can be identified with $K[T] \otimes_{K[P]} K[G] \otimes_{K[P]} K^{(\chi)}$, and

$$K[T] \otimes_{K[P]} K[G] \otimes_{K[P]} K^{(\chi)} \cong \bigoplus_{w \in W} K^{(w\chi)}.$$

(iv) Let S be a nonzero $K[[G]]$-submodule of $M^{(\chi)}$. Then $K[[T]] \otimes_{K[[P]]} S$ is non-zero, and the image of S in $K[[T]] \otimes_{K[[P]]} M^{(\chi)}$ is also nonzero.

The proof of Theorem 1.1 follows from Propositions 3.9, 4.2, and 4.4. It fundamentally relies on the decomposition $M^{(\chi)} = \bigoplus_{w \in W} M_w^{(\chi)}$ described in Section 2.4. The components $M_w^{(\chi)}$ are not invariant under T-action, which is an obstacle, but also our basic tool. Namely, we use the T-action to push the

elements of $M^{(\chi)}$ into specific $M_w^{(\chi)}$ components. Notice that the components $M_w^{(\chi)}$ come from the Iwasawa decomposition, while the Jacquet tensors are closely related to the Bruhat decomposition. The main technical difficulty in this paper is relating these two decompositions.

In Section 5, we apply Jacquet tensors to the problem of the reducibility of principal series representations. Significant progress on the problem has been made recently by Abe and Herzig in [1], using smooth and locally analytic representations. However, we are interested in working with Iwasawa modules, and we investigate how the reducibility can be detected on the dual side.

2. Preliminaries

Let $\mathbb{Q}_p \subseteq L \subseteq K$ be a sequence of finite extensions. We denote by o_L the ring of integers of L and by $\mathfrak{p}_L$ its unique maximal ideal. Similarly, we have o_K and $\mathfrak{p}_K$, and we select a uniformizer $\varpi_K \in \mathfrak{p}_K$.

If $\mathbf{H}$ is an algebraic $\mathbb{Z}$-group, we set $H = \mathbf{H}(L)$ and $H_0 = \mathbf{H}(o_L)$. The kernel of the canonical projection $H_0 \to \mathbf{H}(o_L/\mathfrak{p}_L^n)$ is denoted by H_n. Finally, we set $\bar{H} = H(o_L/\mathfrak{p}_L)$.

In this paper, $\mathbf{G}$ is a split connected reductive $\mathbb{Z}$-group, $G = \mathbf{G}(L)$, and $G_0 = \mathbf{G}(o_L)$.

2.1. *Parabolic subgroups.* We equip $\mathbf{G}$ with a choice of Borel $\mathbf{P}$, having unipotent radical $\mathbf{U}$ and split maximal torus $\mathbf{T} \subset \mathbf{P}$. Let Φ be the set of roots of $\mathbf{G}$ relative to $\mathbf{T}$. Our choice of the Borel subgroup $\mathbf{P}$ determines the positive roots Φ^+, negative roots Φ^-, and the set of simple roots Δ. Then $\mathbf{U} = \prod_{\alpha\in\Phi^+} \mathbf{U}_\alpha$. The opposite Borel subgroup $\mathbf{P}^-$ has the unipotent radical $\mathbf{U}^- = \prod_{\alpha\in\Phi^-} \mathbf{U}_\alpha$.

We denote by $W = W(\mathbf{G}, \mathbf{T})$ the Weyl group of $\mathbf{G}$ relative to $\mathbf{T}$. For $\alpha \in \Delta$, we denote by s_α the simple reflection corresponding to α. For each $w \in W$ we select a representative $\dot{w} \in \mathbf{G}(\mathbb{Z})$.

For $\Theta \subseteq \Delta$, let $\mathbf{A}_\Theta$ be the connected component of identity in $\cap_{\alpha\in\Theta} \ker \alpha$ and $\mathbf{M}_\Theta = Z_{\mathbf{G}}(\mathbf{A}_\Theta)$. Then $\mathbf{P}_\Theta = \mathbf{M}_\Theta\mathbf{U}$ is the standard parabolic subgroup corresponding to Θ. It has Levi decomposition $\mathbf{P}_\Theta = \mathbf{M}_\Theta\mathbf{U}_\Theta$, where $\mathbf{U}_\Theta$ is the unipotent radical of $\mathbf{P}_\Theta$. Notice that $\mathbf{P}_\emptyset = \mathbf{P}$. Let W_Θ be the subgroup of W generated by s_α, $\alpha \in \Theta$. Then

$$[W_\Theta \setminus W] = \{w \in W \mid w^{-1}\Theta > 0\}$$

is a set of coset representatives of $W_\Theta \setminus W$ [10], and

$$\mathbf{G} = \coprod_{w\in[W_\Theta\setminus W]} \mathbf{P}_\Theta w \mathbf{P}. \tag{2.1}$$

Since $\mathbf{G}$ is $\mathbb{Z}$-split, $G = \mathbf{G}(L)$ decomposes in the same way as the disjoint union $G = \coprod_{w\in[W_\Theta\setminus W]} P_\Theta w P$.

Let B be the standard Iwahori subgroup of $G_0 = \mathbf{G}(o_L)$. It is defined as the preimage of $\bar{P} = P(o_L/\mathfrak{p}_L)$ under the projection $G_0 \to \mathbf{G}(o_L/\mathfrak{p}_L)$. Then

$$G_0 = \coprod_{w\in W} B\dot{w}P_0 \quad \text{and} \quad G = \coprod_{w\in W} B\dot{w}P. \tag{2.2}$$

Define $V_w^{\pm} = wU^{-}w^{-1}$ and

$$V_{w,\frac{1}{2}}^{\pm} = B \cap \dot{w}U_0^{-}\dot{w}^{-1} = (U_0 \cap \dot{w}U^{-}\dot{w}^{-1})(U_1^{-} \cap \dot{w}U^{-}\dot{w}^{-1}).$$

From [5] or [4, Proposition 4.45], we know that $\coprod_{w\in W} V_{w,\frac{1}{2}}^{\pm}\dot{w}$ is a set of coset representatives of G_0/P_0. In particular, $B\dot{w}B = V_{w,\frac{1}{2}}^{\pm}\dot{w}P_0$ and we have the disjoint union decompositions

$$G_0 = \coprod_{w\in W} V_{w,\frac{1}{2}}^{\pm}\dot{w}P_0 \quad \text{and} \quad G = \coprod_{w\in W} V_{w,\frac{1}{2}}^{\pm}\dot{w}P. \tag{2.3}$$

2.2. *Iwasawa algebras.* If H is a profinite group, then the Iwasawa algebra of H over o_K is the projective limit

$$o_K[[H]] = \varprojlim_{N\in\mathcal{N}(H)} o_K[H/N],$$

where $\mathcal{N}(H)$ is the set of open normal subgroups of H. It carries the projective limit topology. In addition, we define $K[[H]] = K \otimes_{o_K} o_K[[H]]$ equipped with the finest locally convex topology such that the inclusion $o_K[[H]] \hookrightarrow K[[H]]$ is continuous.

The set $\mathcal{N}(H)$ in the definition of $o_K[[H]]$ can be replaced by any of its subsets forming a neighbourhood basis of the identity. In particular, if $\mathbf{H}$ is an algebraic $\mathbb{Z}$-group, $H_0 = \mathbf{H}(o_L)$, and $H_n = \ker(H_0 \to \mathbf{H}(o_L/\mathfrak{p}_L^n))$, then

$$o_K[[H_0]] = \varprojlim_{n\in\mathbb{N}} o_K[H_0/H_n].$$

The Iwasawa algebra $K[[G]]$ is defined as the locally convex direct sum

$$K[[G]] = \bigoplus_{g\in G/H} gK[[H]]$$

where H is any compact open subgroup of G. It is isomorphic to the convolution algebra of compactly supported continuous distributions on G (see [7, Proposition 4.7]).

2.3. *Linear maps on Iwasawa algebras.* If M is a linear-topological o_K-module, we denote by $C(H, M)$ the space of continuous maps $f : H \to M$ and by $\mathrm{Hom}_{o_K}^{c}(o_K[[H]], M)$ the set of continuous o_K-linear maps $f : o_K[[H]] \to M$. We will need the following result (Lemma 2.1 from [19]).

LEMMA 2.1. *Let M be a complete Hausdorff linear-topological o_K-module. Then the restriction map $f \mapsto f|_H$ defines a bijection*

$$\mathrm{Hom}_{o_K}^{c}(o_K[[H]], M) \xrightarrow{\sim} C(H, M).$$

If V is a locally convex K-vector space, we denote by $\mathcal{L}(K[[G]], V)$ the space of continuous K-linear maps $f : K[[G]] \to V$. A locally convex vector space V is called quasi-complete if every bounded closed subset of V is complete (see [17, §7]). The following is Lemma 4.10 from [7].

LEMMA 2.2. *Let V be a quasi-complete Hausdorff locally convex K-vector space. Then the restriction map $f \mapsto f|_G$ defines a K-linear isomorphism $\mathcal{L}(K[[G]], V) \xrightarrow{\sim} C(G, V)$.*

2.4. *Continuous principal series.* Let $\chi : T \to K^\times$ be a continuous character. We define

$$\mathrm{Ind}_P^G(\chi^{-1}) = \{f : G \to K \text{ continuous } \mid f(gp) = \chi(p)f(g)\ \forall p \in P, g \in G\}$$

with the action of G by left translations. This is an admissible Banach space representation [4, Proposition 7.5, Corllary 7.13]. The dual of $\mathrm{Ind}_P^G(\chi^{-1})$ is isomorphic to

$$M^{(\chi)} = K[[G]] \otimes_{K[[P]]} K^{(\chi)}.$$

We know that $M^{(\chi)} \cong K[[G_0]] \otimes_{K[[P_0]]} K^{(\chi)}$ as $K[[G_0]]$-modules [7, Theorem 5.4]. Let $M_w^{(\chi)}$ be the set of all elements of $M^{(\chi)}$ supported on BwP. Then $M^{(\chi)}$ decomposes as the direct sum of $K[[B]]$-modules, $M^{(\chi)} = \bigoplus_{w \in W} M_w^{(\chi)}$. The map $\varphi_w : K[[V^{\pm}_{w,\frac{1}{2}}]] \to M_w^{(\chi)}$ given by $\mu \mapsto \mu\dot{w} \otimes 1$ is an isomorphism of $K[[V^{\pm}_{w,\frac{1}{2}}]]$-modules [4, Proposition 7.14]. Then

$$M^{(\chi)} = \bigoplus_{w \in W} M_w^{(\chi)} \xrightarrow{\sim} \bigoplus_{w \in W} K[[V^{\pm}_{w,\frac{1}{2}}]]. \tag{2.4}$$

For $w \in W$, we denote by $w\chi$ the character of T defined by $w\chi(t) = \chi(\dot{w}^{-1}t\dot{w})$. This definition does not depend on the choice of a representative of w. Notice that

$$t\dot{w} \otimes 1 = w\chi(t)\dot{w} \otimes 1,$$

so $K(\dot{w} \otimes 1) \cong K^{(w\chi)}$ as $K[[T]]$-modules.

3. Tensors playing the role of Jacquet modules

The augmentation map $\mathrm{aug} : o_K[[G_0]] \to o_K$ is a continuous ring homomorphism [4, Section 1.3.3]. It extends to a continuous ring homomorphism

$$\mathrm{aug} : K[[G]] \to K.$$

Let $\Theta \subset \Delta$. We denote by $\mathcal{A}(U_\Theta)$ the kernel of $\mathrm{aug} : K[[U_\Theta]] \to K$. Similarly, we write $\mathcal{A}(U_0)$ for the kernel of $\mathrm{aug} : K[[U_0]] \to K$ and $\mathcal{A}(o_K[[U_0]])$ for the kernel of $\mathrm{aug} : o_K[[U_0]] \to o_K$. Using the augmentation map, we equip K with a $K[[U_\Theta]]$-module structure.

LEMMA 3.1. *Consider $K[[M_\Theta]]$ as a right $K[[P_\Theta]]$-module, with the natural $K[[M_\Theta]]$-action and the trivial U_Θ-action. Then for any $K[[P_\Theta]]$-module M, we have the following isomorphisms of K-spaces*

$$K[[M_\Theta]] \otimes_{K[[P_\Theta]]} M \cong K \otimes_{K[[U_\Theta]]} M \cong M/\mathcal{A}(U_\Theta)M.$$

Moreover, $\mathcal{A}(U_\Theta)M$ is $K[[M_\Theta]]$-invariant. The spaces $K[[M_\Theta]] \otimes_{K[[P_\Theta]]} M$ and $M/\mathcal{A}(U_\Theta)M$ are isomorphic as $K[[M_\Theta]]$-modules.

PROOF. The first isomorphism in the displayed equation is given by $\eta \otimes m \mapsto 1 \otimes \eta m$, for $\eta \in K[[M_\Theta]]$ and $m \in M$. The second isomorphism follows from $K[[U_\Theta]]/\mathcal{A}(U_\Theta) \cong K$ (see Example (8), p. 370 of [11]).

Finally, the isomorphism $K[[M_\Theta]] \otimes_{K[[P_\Theta]]} M \cong M/\mathcal{A}(U_\Theta)M$ is given by $\eta \otimes m \mapsto \eta m + \mathcal{A}(U_\Theta)M$ and is clearly $K[[M_\Theta]]$-equivariant. ∎

We are interested mainly in $K[[T]] \otimes_{K[[P]]} M^{(\chi)}$ and the image in it of submodules of $M^{(\chi)}$. We start by exploring $K[[T]] \otimes_{K[[P]]} M^{(\chi)}$.

3.1. *The action of T^+.* Following the notation introduced in Section 2, we have $U_0 = \mathbf{U}(o_L)$ and $U_n = \ker(U_0 \to \mathbf{U}(o_L/\mathfrak{p}_L^n))$.

LEMMA 3.2. *Let $T^+ = \{t \in T \mid |\alpha(t)|_L < 1$ for all $\alpha \in \Phi^+\}$. Then for any $s \in T^+$ we have*

(i) $sU_n s^{-1} \subset U_{n+1}$, for all $n \geq 0$,
(ii) $s^{-1}U_n^- s \subset U_{n+1}^-$, for all $n \geq 0$,
(iii) $U_0 \subset s^{-1}U_0 s \subset \cdots \subset s^{-n}U_0 s^n \subset s^{-n-1}U_0 s^{n+1} \subset \cdots$ is an increasing sequence of compact subgroups of U and

$$U = \bigcup_{n \in \mathbb{N}} s^{-n}U_0 s^n.$$

PROOF. Let $\mathbf{U}_\alpha$ be the root subgroup associated to $\alpha \in \Phi$ and $U_\alpha = \mathbf{U}_\alpha(L)$. There is an isomorphism $x_\alpha : L \to U_\alpha$ such that

$$t x_\alpha t^{-1} = x_\alpha(\alpha(t)a)$$

for all $t \in T$, $a \in L$. Then $U_{\alpha,n}$, $n \geq 0$, is the image of $\mathfrak{p}_L^n$. By §14.4 of [9], multiplying root subgroups gives an isomorphism of varieties $\prod_\alpha \mathbf{U}_\alpha \to \mathbf{U}$, for any ordering of the positive roots. It follows

$$U_n = \prod_{\alpha > 0} U_{\alpha,n}, \quad n \geq 0.$$

Notice that for $s \in T^+$ and $\alpha \in \Phi^+$ we have $\alpha(s) \in \mathfrak{p}_L$. Take $u \in U_{\alpha,n}$. Then $u = x_\alpha(a)$, for some $a \in \mathfrak{p}_L^n$, and $s x_\alpha(a) s^{-1} = x_\alpha(\alpha(s)a) \in U_{\alpha,n+1}$. This implies (i). Assertion (ii) can be proved similarly.

For (iii), fix an ordering of the positive roots $\alpha_1, \ldots, \alpha_r$ and take $u \in U$. Then u can be written in a unique way as

$$u = x_{\alpha_1}(a_1) \cdots x_{\alpha_r}(a_r), \quad a_i \in L.$$

Since $\alpha(s) \in \mathfrak{p}_L$ for all positive roots α, there exists $n \geq 0$ such that $\alpha_i(s)^n a_i \in o_L$, for all $i = 1, \ldots, r$. Then $s^n u s^{-n} = x_{\alpha_1}(\alpha_1(s)^n a_1) \cdots x_{\alpha_r}(\alpha_r(s)^n a_r) \in U_0$ and $u \in s^{-n} U_0 s^n$. ∎

We will use the following lemma repeatedly.

LEMMA 3.3.

(i) For any compact subset $X \subset U$ there exists $t \in T$ such that $tXt^{-1} \subseteq U_0$.

(ii) For any $\eta \in K[[U]]$ there exists $t \in T$ such that $t\eta t^{-1} \in K[[U_0]]$.

PROOF. (i) Since X is compact and U_0 is open in U, X can be covered with a finite number of cosets $u_1 U_0, \ldots, u_k U_0$. Take $s \in T^+$. By Lemma 3.2 (iii), for each $i \in \{1, \ldots k\}$, there exists n_i such that $s^{n_i} u_i s^{-n_i} \in U_0$, and by Lemma 3.2 (i) we have $s^m u_i U_0 s^{-m} \subset U_0$ for any $m \geq n_i$. Let $m = \max\{n_i \mid i = 1, \ldots, k\}$ and $t = s^m$. Then $tXt^{-1} \subseteq U_0$.

(ii) If $\eta \in K[[U]]$, then η has compact support and the assertion follows from (i). ∎

3.2. *Exactness.* Notice that $K[[M_\Theta]] \otimes_{K[[P_\Theta]]} __$ is a right exact functor on the category of left $K[[P_\Theta]]$-modules. Lemma 3.5 below tells us that $K[[M_\Theta]]$ is not flat as a $K[[P_\Theta]]$-module, so the functor $K[[M_\Theta]] \otimes_{K[[P_\Theta]]} __$ is not exact. Similarly, K is not flat as a $K[[U_\Theta]]$-module and the functor $K \otimes_{K[[U_\Theta]]} __$ is right-exact, but not exact.

LEMMA 3.4. *The ring $K[[U_\Theta]]$ has no zero divisors.*

PROOF. Take $\mu, \eta \in K[[U_\Theta]]$ such that $\mu\eta = 0$. Using Lemma 3.3(ii), we can find $t \in T$ such that $t\eta t^{-1}, t\mu t^{-1} \in K[[U_0]]$. Since $K[[U_0]]$ has no zero divisors [3, Theorem 4.3], it follows $\mu = 0$ or $\eta = 0$. ∎

LEMMA 3.5.

(i) K is not flat as a $K[[U_\Theta]]$-module.

(ii) $K[[M_\Theta]]$ is not flat as a $K[[P_\Theta]]$-module.

PROOF. Consider the exact sequence of $K[[U_\Theta]]$-modules

$$0 \longrightarrow \mathcal{A}(U_\Theta) \longrightarrow K[[U_\Theta]] \xrightarrow{\text{aug}} K \longrightarrow 0.$$

By [15, Theorem 4.23], K is flat if and only if for any $\mu \in \mathcal{A}(U_\Theta)$ there exists $f \in \mathrm{Hom}_{K[[U_\Theta]]}(K[[U_\Theta]], \mathcal{A}(U_\Theta))$ with $f(\mu) = \mu$.

Take $\mu \neq 0$ and assume there exists an f as above. Let $\eta = f(1)$. We have $f(\mu) = \mu$ and $f(\mu) = f(\mu \cdot 1) = \mu\eta$. Then $\mu = \mu\eta$ and thus $\mu(\eta - 1) = 0$. Notice that $\eta \neq 1$ because $\eta \in \mathcal{A}(U_\Theta)$. It follows that μ is a zero divisor, contradicting Lemma 3.4.

This proves (i). Assertion (ii) can be proved similarly. ∎

3.3. *Linear independence.*

LEMMA 3.6. *Let $s \in \mathbb{N}$ and let n be a natural number such that $\chi(T_n) \subset 1 + \mathfrak{p}_K^s$. Fix $w \in W$. Let $\eta \in o_K[[U_n \cap \dot{w}U\dot{w}^{-1}]]$ and $\nu \in o_K[[V^{\pm}_{w,\frac{1}{2}}]]$. Write $(\eta\nu)\dot{w} \otimes 1 = \mu\dot{w} \otimes 1$, where $\mu \in o_K[[V^{\pm}_{w,\frac{1}{2}}]]$. If $\operatorname{aug}\eta = 0$, then $\operatorname{aug}\mu \in \mathfrak{p}_K^s$.*

PROOF. From [4, Lemma 7.23], we know that multiplication induces a homeomorphism $V^{\pm}_{w,\frac{1}{2}} \times P^{w,\pm}_{\frac{1}{2}} \to B$, where

$$P^{w,\pm}_{\frac{1}{2}} = B \cap \dot{w}P_0\dot{w}^{-1} = T_0(U_0 \cap \dot{w}U_0\dot{w}^{-1})(U_1^- \cap \dot{w}U_0\dot{w}^{-1}).$$

Take $\eta = u \in U_n \cap \dot{w}U\dot{w}^{-1}$ and $\nu = v \in V^{\pm}_{w,\frac{1}{2}}$. Write $(uv)\dot{w} \otimes 1 = \mu\dot{w} \otimes 1$, where $\mu \in o_K[[V^{\pm}_{w,\frac{1}{2}}]]$. We prove that $\operatorname{aug}\mu - \operatorname{aug}\eta \in \mathfrak{p}_K^s$. Since G_n is normal in G_0, $v^{-1}uv \in G_n$, and we can write it as $v^{-1}uv = v_1p$, where $v_1 \in V^{\pm}_{w,n}$ and $p \in P_n^{w,\pm}$. Then

$$v^{-1}uv\dot{w} \otimes 1 = \chi(\dot{w}^{-1}p\dot{w})v_1\dot{w} \otimes 1.$$

It follows $\mu = \chi(\dot{w}^{-1}p\dot{w})vv_1$ and $\operatorname{aug}\mu = \chi(\dot{w}^{-1}p\dot{w})$, which lies in $1 + \mathfrak{p}_K^s$ because $\dot{w}^{-1}p\dot{w} \in P_n$. Then $\operatorname{aug}\mu - \operatorname{aug}\eta = \operatorname{aug}\mu - 1 \in \mathfrak{p}_K^s$.

For $\eta \in o_K[[U_n \cap \dot{w}U\dot{w}^{-1}]]$ and $\nu \in o_K[[V^{\pm}_{w,\frac{1}{2}}]]$, let us denote by $\mu(\eta,\nu)$ the unique element of $o_K[[V^{\pm}_{w,\frac{1}{2}}]]$ such that

$$(\eta\nu)\dot{w} \otimes 1 = \mu(\eta,\nu)\dot{w} \otimes 1.$$

Notice that the map $(\eta,\nu) \mapsto \operatorname{aug}\mu(\eta,\nu)$ is continuous. Then $(\eta,\nu) \mapsto \operatorname{aug}\mu(\eta,\nu) + \operatorname{aug}\eta$ is continuous and o_K-linear in the first variable. If we fix $v \in V^{\pm}_{w,\frac{1}{2}}$, then we have a continuous map $U_n \cap \dot{w}U\dot{w}^{-1} \to \mathfrak{p}_K^s$ given by $u \mapsto \operatorname{aug}\mu(u,v) - 1$. By Lemma 2.1, there exists a unique o_K-linear map $f : o_K[[U_n \cap \dot{w}U\dot{w}^{-1}]] \to o_K$ which restricts to $U_n \cap \dot{w}U\dot{w}^{-1}$ as $u \mapsto \operatorname{aug}\mu(u,v) - 1$. By uniqueness, $f(\eta) = \operatorname{aug}\mu(\eta,v) - \operatorname{aug}(\eta)$ and $f(\eta) \in \mathfrak{p}_K^s$. Next, fix $\eta \in o_K[[U_n \cap \dot{w}U\dot{w}^{-1}]]$ such that $\operatorname{aug}\eta = 0$. We consider the map $V^{\pm}_{w,\frac{1}{2}} \to \mathfrak{p}_K^s$ given by $v \mapsto \operatorname{aug}\mu(\eta,\nu)$. We can apply Lemma 2.1 again to show that $\operatorname{aug}\mu(\eta,\nu) \in \mathfrak{p}_K^s$. ∎

LEMMA 3.7. *Let $v \in V^{\pm}_{w_0,\frac{1}{2}}$ and $t \in T$. If $tv\dot{w}_0 \in Bw_0P$, then $tvt^{-1} \in V^{\pm}_{w_0,\frac{1}{2}}$.*

PROOF. Assume $tv\dot{w}_0 \in Bw_0P$. Then we can write $tv\dot{w}_0 = v_1\dot{w}_0p$, where $v_1 \in V^{\pm}_{w_0,\frac{1}{2}}$ and $p \in P$. Then $v_1^{-1}tv = t(t^{-1}v_1^{-1}t)v \in TV^{\pm}_{w_0}$ and

$$v_1^{-1}tv = \dot{w}_0p\dot{w}_0^{-1} \in TV^{\pm}_{w_0} \cap \dot{w}_0P\dot{w}_0^{-1} = T.$$

It follows $tv = v_1t_1$ for some $t_1 \in T$, and hence $tvt^{-1} = v_1t_1t^{-1}$. Since tvt^{-1} and v_1 are both unipotent, we must have $t = t_1$. Then $tvt^{-1} = v_1 \in V^{\pm}_{w_0,\frac{1}{2}}$, proving the claim. ∎

LEMMA 3.8. *Let $\nu \in o_K[[V^{\pm}_{w_0,\frac{1}{2}}]]$ and $t \in T$. Write*

$$t\nu\dot{w}_0 \otimes 1 = \sum_{w\in W} \mu_w \dot{w} \otimes 1, \quad \mu_w \in K[[V^{\pm}_{w,\frac{1}{2}}]].$$

Then $(w_0\chi)(t^{-1})\mu_{w_0} \in o_K[[V^{\pm}_{w_0,\frac{1}{2}}]]$.

PROOF. Follows from Lemma 3.7, using Lemma 2.1. □

PROPOSITION 3.9. *The elements $1 \otimes \dot{w} \otimes 1$, where $w \in W$, are linearly independent in $K[[T]] \otimes_{K[[P]]} M^{(\chi)}$.*

PROOF. Fix $w_0 \in W$. First, we will prove that $1 \otimes \dot{w}_0 \otimes 1 \neq 0$. Assume on the contrary that

$$\dot{w}_0 \otimes 1 = \eta_1 m_1 + \cdots + \eta_k m_k, \tag{3.1}$$

for some $\eta_i \in \mathcal{A}(U)$, $m_i \in M^{(\chi)}$. Since $\eta_1, \ldots, \eta_k$ are compactly supported, there exists $t \in T$ such that $t\eta_i t^{-1} \in K[[U_0]]$ for all i. Acting on (3.1) by $(w_0\chi)(t^{-1})t$, we get

$$\dot{w}_0 \otimes 1 = \eta_1' m_1' + \cdots + \eta_k' m_k',$$

where $\eta_i' = t\eta_i t^{-1} \in \mathcal{A}(U_0)$ and $m_i' = (w_0\chi)(t^{-1})tm_i$. Using the decomposition (2.4) we can write each m_i' as

$$m_i' = \sum_{w\in W} \mu_{i,w}\dot{w} \otimes 1,$$

where $\mu_{i,w} \in K[[V^{\pm}_{w,\frac{1}{2}}]]$. Set $\mu_i = \mu_{i,w_0}$. Since each $M^{(\chi)}_w$ is $K[[U_0]]$-invariant, it follows

$$\dot{w}_0 \otimes 1 = (\eta_1'\mu_1 + \cdots + \eta_k'\mu_k)\dot{w}_0 \otimes 1.$$

We can multiply the equation by an appropriate power of ϖ_K so that

$$\varpi_K^s \dot{w}_0 \otimes 1 = (\eta_1''\mu_1' + \cdots + \eta_k''\mu_k')\dot{w}_0 \otimes 1, \tag{3.2}$$

where $\eta_i'' \in \mathcal{A}(o_K[[U_0]])$ and $\mu_i' \in o_K[[V^{\pm}_{w_0,\frac{1}{2}}]]$.

The group U_0 is topologically finitely generated. Suppose $u_1, \ldots, u_\ell$ are generators. Then $u_1 - 1, \ldots, u_\ell - 1$ generate $\mathcal{A}(o_K[[U_0]])$ as a left or right ideal [18, Proposition 19.5]. Hence, we can write each η_i'' as $\eta_i'' = (u_1 - 1)\eta_{i,1} + \cdots + (u_\ell - 1)\eta_{i,\ell}$, for some $\eta_{i,j} \in o_K[[U_0]]$. Then

$$\varpi_K^s \dot{w}_0 \otimes 1 = \left(\sum_{i=1}^{k} \sum_{j=1}^{\ell} (u_j - 1)\eta_{i,j}\mu_i' \right) \dot{w}_0 \otimes 1.$$

For each j, let ν_j be the element of $o_K[[V^{\pm}_{w_0,\frac{1}{2}}]]$ such that $(\sum_i \eta_{i,j}\mu_i')\,\dot{w}_0 \otimes 1 = \nu_j \dot{w}_0 \otimes 1$. Then

$$\varpi_K^s \dot{w}_0 \otimes 1 = ((u_1 - 1)\nu_1 + \cdots + (u_\ell - 1)\nu_\ell)\dot{w}_0 \otimes 1. \tag{3.3}$$

The character χ is continuous, so there exists $n \in \mathbb{N}$ such that $\chi(T_n) \subset 1 + \mathfrak{p}_K^{s+1}$. Take $t \in T$ such that $tU_0t^{-1} \subset U_n$. Acting on (3.3) by $(w_0\chi)(t^{-1})t$, we get

$$\varpi_K^s \dot{w}_0 \otimes 1 = ((u_1' - 1)\nu_1' + \cdots + (u_\ell' - 1)\nu_\ell')\dot{w}_0 \otimes 1,$$

where $u_i' = tu_it^{-1} \in U_n$ and $\nu_i' = t\nu_it^{-1}$. Using decomposition (2.4), we can write each $\nu_i'\dot{w}_0 \otimes 1$ as

$$\nu_i'\dot{w}_0 \otimes 1 = \sum_{w \in W} \nu_{i,w}'\dot{w} \otimes 1,$$

where $\nu_{i,w}' \in K[[V^{\pm}_{w,\frac{1}{2}}]]$. Set $\lambda_i = \nu_{i,w_0}'$. Then

$$\varpi_K^s \dot{w}_0 \otimes 1 = ((u_1' - 1)\lambda_1 + \cdots + (u_\ell' - 1)\lambda_\ell)\dot{w}_0 \otimes 1 \tag{3.4}$$

and $\lambda_i \in o_K[[V^{\pm}_{w_0,\frac{1}{2}}]]$ by Lemma 3.8. Using the decomposition

$$U_n = (U_n \cap \dot{w}_0U\dot{w}_0^{-1})(U_n \cap \dot{w}_0U^-\dot{w}_0^{-1})$$

we can write $u_i' = v_iv_i'$, where $v_i \in U_n \cap \dot{w}_0U\dot{w}_0^{-1}$ and $v_i' \in U_n \cap \dot{w}_0U^-\dot{w}_0^{-1} \subset V^{\pm}_{w_0,n}$. Then

$$u_i' - 1 = (v_i - 1)v_i' + (v_i' - 1).$$

Equation (3.4) becomes

$$\begin{aligned}\varpi_K^s \dot{w}_0 \otimes 1 = {} & ((v_1 - 1)v_1'\lambda_1 + \cdots + (v_\ell - 1)v_\ell'\lambda_\ell)\dot{w}_0 \otimes 1 \\ & + ((v_1' - 1)\lambda_1 + \cdots + (v_\ell' - 1)\lambda_\ell)\dot{w}_0 \otimes 1.\end{aligned} \tag{3.5}$$

There exists a unique $\mu \in o_K[[V^{\pm}_{w_0,\frac{1}{2}}]]$ such that

$$((v_1 - 1)v_1'\lambda_1 + \cdots + (v_\ell - 1)v_\ell'\lambda_\ell)\dot{w}_0 \otimes 1 = \mu\dot{w}_0 \otimes 1.$$

Lemma 3.6 tells us that $\mathrm{aug}(\mu) \in \mathfrak{p}_K^{s+1}$. The second term in the right hand side of (3.5) is $\mu'\dot{w}_0 \otimes 1$, where

$$\mu' = (v_1' - 1)\lambda_1 + \cdots + (v_\ell' - 1)\lambda_\ell \in o_K[[V^{\pm}_{w_0,\frac{1}{2}}]].$$

Notice that $\mathrm{aug}(\mu') = 0$. Now, equation (3.5) implies $\varpi_K^s \cdot 1 = \mu + \mu'$. This is impossible, because $\mathrm{aug}(\varpi_K^s \cdot 1) = \varpi_K^s$, while

$$\mathrm{aug}(\mu + \mu') = \mathrm{aug}(\mu) + \mathrm{aug}(\mu') = \mathrm{aug}(\mu) \in \mathfrak{p}_K^{s+1}.$$

This proves $1 \otimes \dot{w} \otimes 1 \neq 0$, for all $w \in W$.

For linear independence, assume $\sum_{w \in W} c_w(1 \otimes \dot{w} \otimes 1) = 0$, for some coefficients $c_w \in K$. Equivalently,

$$\sum_{w \in W} c_w\dot{w} \otimes 1 = \eta_1m_1 + \cdots + \eta_km_k, \tag{3.6}$$

for some $\eta_i \in \mathcal{A}(U)$, $m_i \in M^{(\chi)}$. As before, we can find $t \in T$ such that $t\eta_i t^{-1} \in K[[U_0]]$, for all i. Acting on (3.6) by t, we get

$$\sum_{w\in W} c'_w \dot{w} \otimes 1 = \eta'_1 m'_1 + \cdots + \eta'_k m'_k,$$

where $c'_w = c_w(w\chi)(t)$, $\eta'_i = t\eta_i t^{-1} \in \mathcal{A}(U_0)$, and $m'_i = tm_i$. Write $m'_i = \sum_{w\in W} \mu_{i,w}\dot{w} \otimes 1$, with $\mu_{i,w} \in K[[V^{\pm}_{w,\frac{1}{2}}]]$. Then

$$\sum_{w\in W} c'_w \dot{w} \otimes 1 = \sum_{w\in W} \left(\sum_{i=1}^{k} \eta'_i \mu_{i,w} \right) \dot{w} \otimes 1.$$

From the direct sum decomposition (2.4), it follows

$$c'_w \dot{w} \otimes 1 = \sum_{i=1}^{k} \eta'_i \mu_{i,w} \dot{w} \otimes 1,$$

for all $w \in W$. The right hand side belongs to $\mathcal{A}(U_0)M^{(\chi)}$ and the first part of the proof implies $c'_w = 0$, for all $w \in W$. Hence, $c_w = 0$ for all $w \in W$. ∎

3.4. *Topology.* The locally convex topology on $M^{(\chi)}$ can be understood easily using the decomposition $M^{(\chi)} \cong \bigoplus_{w\in W} K[[V^{\pm}_{w,\frac{1}{2}}]]$. If X is a locally convex space and $Y \subseteq X$ a subspace, then X/Y carries the locally convex quotient topology as in [17, §5.B], and this does not require Y being closed in X. Thus, we can equip $K[[T]] \otimes_{K[[P]]} M^{(\chi)}$ with the locally convex quotient topology using $K[[T]] \otimes_{K[[P]]} M^{(\chi)} \cong M^{(\chi)}/\mathcal{A}(U)M^{(\chi)}$. We give an example below with $M^{(\chi)})/\mathcal{A}(U)M^{(\chi)}$ not Hausdorff.

Example. Consider the topology as above for $G = GL_2(L)$ and $\chi = 1$, the trivial character. We have $W = \{1, w\}$, and we take $\dot{w} = \begin{pmatrix} 0 & 1 \\ 1 & 0 \end{pmatrix}$. For $n \in \mathbb{N}$, let

$$g_n = \begin{pmatrix} 1 & 0 \\ \varpi_L^n & 1 \end{pmatrix} = \begin{pmatrix} 1 & \varpi_L^{-n} \\ 0 & 1 \end{pmatrix} \begin{pmatrix} 0 & 1 \\ 1 & 0 \end{pmatrix} \begin{pmatrix} \varpi_L^n & 1 \\ 0 & -\varpi_L^{-n} \end{pmatrix}$$

Then $1 \otimes g_n \otimes 1 = 1 \otimes \dot{w} \otimes 1$, and any neighborhood of $1 \otimes 1 \otimes 1$ contains $1 \otimes \dot{w} \otimes 1$.

4. Submodules

As mentioned before, the functors $K[[M_\Theta]] \otimes_{K[[P_\Theta]]} __$ and $K \otimes_{K[[U_\Theta]]} __$ are not exact. To get an operative tool for studying submodules, we proceed as follows. Let M be a $K[[P_\Theta]]$-module. Given a subset S of M, we denote by $\mathcal{J}_\Theta(S, M)$ the image of S in $K[[M_\Theta]] \otimes_{K[[P_\Theta]]} M$. We write simply $\mathcal{J}(S, M)$ for $\mathcal{J}_\emptyset(S, M)$.

If S is a $K[[P_\Theta]]$-module, then $\mathcal{J}_\Theta(S,M)$ is a $K[[M_\Theta]]$-module. Lemma 3.1 implies

$$\mathcal{J}_\Theta(S,M) = (S + \mathcal{A}(U_\Theta)M)/\mathcal{A}(U_\Theta)M.$$

4.1. *$K[[G]]$-submodules of $M^{(\chi)}$.*

PROPOSITION 4.1. *Let S be a nonzero $K[[G]]$-submodule of $M^{(\chi)}$. Then S contains an element of the form $1\otimes 1+\mu\otimes 1$, where*

$$\mu \in \bigoplus_{1\neq w\in W} K[[V^{\pm}_{w,\frac{1}{2}}]]\dot{w}.$$

PROOF. From the proof of Theorem 7.5 in [5], we know that S contains an element of the form

$$1\otimes 1+\nu\otimes 1,$$

with $\operatorname{supp}\nu$ disjoint from G_nP, for some $n\geq 1$. Now, take

$$v \in \coprod_{w\in W} V^{\pm}_{w,\frac{1}{2}}\dot{w} \setminus G_nP.$$

The Bruhat decomposition implies that there exists a unique $w_v\in W$, $w_v\neq 1$, such that $v\in Uw_vP$. To apply Lemma 3.2, we fix $s\in T^+$. Then there exists $n_v\geq 0$ such that $s^{n_v}vs^{-n_v}\in U_0w_vP\subseteq Bw_vP$. Since Bw_vP is open in G, and conjugation by s is continuous, there exists an open neighborhood $\mathcal{U}_v$ of v in $\coprod_{w\in W} V^{\pm}_{w,\frac{1}{2}}\dot{w}$ such that

$$\mathcal{U}_v \subseteq \coprod_{w\in W} V^{\pm}_{w,\frac{1}{2}}\dot{w}\setminus G_nP \quad\text{and}\quad s^{n_v}\mathcal{U}_v s^{-n_v}\subseteq Bw_vP.$$

The set $\coprod_{w\in W} V^{\pm}_{w,\frac{1}{2}}\dot{w}\setminus G_nP$ is compact, with the open cover $\{\mathcal{U}_v\}$. It hence has a finite subcover $\{\mathcal{U}_{v_1},\dots,\mathcal{U}_{v_k}\}$. Set $\mathcal{U}_i=\mathcal{U}_{v_i}$, $n_i=n_{v_i}$, and $m=\max\{n_1,\dots,n_k\}$. Take any $v\in\coprod_{w\in W} V^{\pm}_{w,\frac{1}{2}}\dot{w}\setminus G_nP$. Then $v\in\mathcal{U}_i$, for some i, so $s^{n_i}vs^{-n_i}\notin BP$. We claim that $s^mvs^{-m}\notin BP$. Otherwise, if $s^mvs^{-m}=x\in BP=U_1^-P$, Lemma 3.2(ii) would imply

$$s^{n_i}vs^{-n_i}=s^{-m+n_i}xs^{m-n_i}\in U_1^-P=BP,$$

a contradiction.

Acting on $1\otimes 1+\nu\otimes 1$ by $\chi(s^{-m})s^m$, we obtain an element $1\otimes 1+\mu\otimes 1$ with $\mu\in\bigoplus_{w\in W}K[[V^{\pm}_{w,\frac{1}{2}}]]\dot{w}$ and $\operatorname{supp}(\mu)$ disjoint from BP. That is, $\mu\in\bigoplus_{1\neq w\in W}K[[V^{\pm}_{w,\frac{1}{2}}]]\dot{w}$. ∎

PROPOSITION 4.2. *Let S be a nonzero $K[[G]]$-submodule of $M^{(\chi)}$. Then $\mathcal{J}(S,M^{(\chi)})$ is non-zero. In particular, $K[[T]]\otimes_{K[[P]]}S$ is non-zero.*

PROOF. The second statement follows from the first, using the natural surjection

$$K[[T]] \otimes_{K[[P]]} S \longrightarrow \mathcal{J}(S, M^{(\chi)}).$$

For the first statement, we have to prove that S is not contained in $\mathcal{A}(U)M^{(\chi)}$. Assume on the contrary that $S \subseteq \mathcal{A}(U)M^{(\chi)}$. Let $1 \otimes 1 + \mu \otimes 1$ be an element of S as in Proposition 4.1. We proceed similarly as before. By the assumption,

$$1 \otimes 1 + \mu \otimes 1 = \eta_1 m_1 + \cdots + \eta_k m_k, \tag{4.1}$$

for some $\eta_i \in \mathcal{A}(U)$, $m_i \in M^{(\chi)}$. Fix $s \in T^+$. According to Lemmas 3.2 and 3.3, there exists $n \in \mathbb{N}$ such that $t = s^n$ satisfies $t\eta_i t^{-1} \in K[[U_0]]$, for all i. Acting on (4.1) by $\chi(t^{-1})t$, we get

$$1 \otimes 1 + \mu' \otimes 1 = \eta_1' m_1' + \cdots + \eta_k' m_k',$$

where $\eta_i' = t\eta_i t^{-1} \in \mathcal{A}(U_0)$, and $m_i' = \chi(t^{-1})tm_i$. We claim that the support of μ' is disjoint from BP. Namely, if there exists $y \in \mathrm{supp}(\mu')$ such that $y \in BP$, then $y = s^n x s^{-n}$ for some $x \notin BP$, and Lemma 3.2(ii) would imply $x = s^{-n} y s^n \in U^- P = BP$, a contradiction. Hence,

$$\mu' \in \bigoplus_{1 \neq w \in W} K[[V^{\pm}_{w,\frac{1}{2}}]]\dot{w}.$$

Write $m_i' = \sum_{w \in W} \mu_{i,w} \dot{w} \otimes 1$, with $\mu_{i,w} \in K[[V^{\pm}_{w,\frac{1}{2}}]]$. Then

$$1 \otimes 1 + \mu' \otimes 1 = \sum_{w \in W} \left(\sum_{i=1}^{k} \eta_i' \mu_{i,w} \right) \dot{w} \otimes 1.$$

From the direct sum decomposition (2.4), it follows $1 \otimes 1 \in \mathcal{A}(U)M^{(\chi)}$, contradicting the fact that $1 \otimes 1 \otimes 1 \neq 0$. □

4.2. *Unitary characters.* A continuous character with values in $o_K^\times$ is called *unitary*.

PROPOSITION 4.3. *Suppose $\chi : T \to o_K^\times$ is a unitary character. Let S be a $K[[G]]$-submodule of $M^{(\chi)}$. If S is a proper submodule, then $\mathcal{J}(S, M^{(\chi)})$ does not contain $1 \otimes \dot{w} \otimes 1$ for any $w \in W$.*

PROOF. Suppose on the contrary that S contains an element of the form

$$\dot{w} \otimes 1 + \eta_1 m_1 + \cdots + \eta_k m_k, \tag{4.2}$$

where $\eta_i \in \mathcal{A}(U)$ and $m_i \in M^{(\chi)}$. We proceed similarly as before. First, we find $t \in T$ such that $t\eta_i t^{-1} \in K[[U_0]]$, for all i. Acting on (4.2) by $w\chi(t^{-1})t$, we get an element of S of the form

$$x = \dot{w} \otimes 1 + \eta_1' m_1' + \cdots + \eta_k' m_k',$$

with $\eta_i' \in \mathcal{A}(U_0)$ and $m_i' \in M^{(\chi)}$. We can multiply it by an appropriate power of ϖ_K so that the resulting element $z \in S$ can be written as

$$z = \varpi_K^s(\dot{w} \otimes 1) + m,$$

where $m \in \mathcal{A}(o_K[[U_0]])\left(o_K[[G_0]] \otimes_{o_K[[P_0]]} o_K^{(\chi)}\right)$. Now, we use again the property that U_0 is topologically finitely generated. If $u_1, \dots, u_\ell$ are generators, then $u_1 - 1, \dots, u_\ell - 1$ generate $\mathcal{A}(o_K[[U_0]])$ as a left or right ideal [18, Proposition 19.5]. Then we can write z as

$$z = \varpi_K^s(\dot{w} \otimes 1) + (u_1 - 1)m_1'' + \cdots + (u_\ell - 1)m_\ell''$$

where $s \in \mathbb{N}$ and $m_i'' \in o_K[[G_0]] \otimes_{o_K[[P_0]]} o_K^{(\chi)}$. For every $n \in \mathbb{N}$, there exists $t_n \in T$ such that $t_n u_k t_n^{-1} \in U_n$ for all $k = 1, \dots, \ell$. Define $z_n = \chi(t_n^{-1}) t_n z$. We will prove that the sequence $\{z_n\}$ is convergent in $M^{(\chi)}$, with limit $\varpi_K^s(\dot{w} \otimes 1)$.

Let $M_0^{(\chi)} = o_K[[G_0]] \otimes_{o_K[[P_0]]} o_K^{(\chi)}$. This is an $o_K[[G_0]]$-module. The condition that χ is unitary implies that $M_0^{(\chi)}$ is invariant under T-action. By [4, Proposition 7.20],

$$M_0^{(\chi)} \cong \varprojlim_{j \in \mathbb{N}} \left(o_K[G_0/G_j] \otimes_{o_K[P_0]} o_K^{(\chi)}\right).$$

For $j \in \mathbb{N}$, denote by φ_j the projection $M_0^{(\chi)} \to o_K[G_0/G_j] \otimes_{o_K[P_0]} o_K^{(\chi)}$. Define

$$J_{i,j} = \ker(\mathrm{pr}_i \circ \varphi_j),$$

where pr_i is the projection $\mathrm{pr}_i : o_K[G_0/G_j] \to o_K/\mathfrak{p}_K^i[G_0/G_j]$. Then $J_{i,j}$, for $i, j \in \mathbb{N}$, form a neighborhood basis of zero in $M_0^{(\chi)}$.

Fix $k \in \{1, \dots, \ell\}$. We claim that

$$\lim_{n \to \infty} \left(\chi(t_n^{-1}) t_n (u_k - 1) m_k''\right) = 0.$$

To prove the claim, take an open neighborhood of zero in $M_0^{(\chi)}$. It contains $J_{i,j}$, for some $i, j \in \mathbb{N}$. Then for any $n > j$,

$$\varphi_j(\chi(t_n^{-1}) t_n (u_k - 1) m_k'') = \varphi_j((t_n u_k t_n^{-1} - 1)\chi(t_n^{-1}) t_n m_k'')$$

and this is zero because $t_n u_k t_n^{-1} - 1$ has image zero in $o_K[G_0/G_j]$. It follows that the element $\chi(t_n^{-1}) t_n (u_k - 1) m_k''$ belongs to $J_{q,j}$ for any $q \in \mathbb{N}$, so in particular it belongs to $J_{i,j}$. This proves the claim. Then

$$\lim_{n \to \infty} z_n = \lim_{n \to \infty} \left(\varpi_K^s(\dot{w} \otimes 1) + \sum_{k=1}^{\ell} \left(\chi(t_n^{-1}) t_n (u_k - 1) m_k''\right)\right) = \varpi_K^s(\dot{w} \otimes 1).$$

Set $S_0 = S \cap M_0^{(\chi)}$. Then S_0 is an $o_K[[G_0]]$-submodule of $M_0^{(\chi)}$. It is closed in $M_0^{(\chi)}$ because $M_0^{(\chi)}$ is a finitely generated module over the noetherian ring $o_K[[G_0]]$ (see [4, Proposition 4.38]). Notice that $z_n \in S_0$, for all n. It follows

that $\varpi_K^s(\dot{w}\otimes 1)\in S_0$, and consequently $\dot{w}\otimes 1\in S$. This implies $S=M^{(\chi)}$, contradicting the assumption that S is a proper submodule. □

4.3. *The image of* $K[G]\otimes_{K[P]}K^{(\chi)}$. It follows easily from (2.3) that

$$K[G]\otimes_{K[P]}K^{(\chi)}=\bigoplus_{w\in W}K[V^{\pm}_{w,\frac{1}{2}}]\dot{w}\otimes 1.$$

The canonical embeddings $K[V^{\pm}_{w,\frac{1}{2}}]\hookrightarrow K[[V^{\pm}_{w,\frac{1}{2}}]]$ described in [4, Lemma 2.44] and the decomposition (2.4) then give us

$$\begin{aligned}K[G]\otimes_{K[P]}K^{(\chi)}&=\bigoplus_{w\in W}K[V^{\pm}_{w,\frac{1}{2}}]\dot{w}\otimes 1\\&\hookrightarrow\bigoplus_{w\in W}K[[V^{\pm}_{w,\frac{1}{2}}]]\dot{w}\otimes 1=M^{(\chi)}.\end{aligned}$$

Thus, the $K[G]$-module $K[G]\otimes_{K[P]}K^{(\chi)}$ embeds canonically in $M^{(\chi)}$.

PROPOSITION 4.4. *Let $\chi:P\to K^\times$ be a continuous character.*

(i) As $K[T]$-modules,

$$\begin{aligned}\mathcal{J}(K[G]\otimes_{K[P]}K^{(\chi)},M^{(\chi)})&=K[T]\otimes_{K[P]}K[G]\otimes_{K[P]}K^{(\chi)}\\&=\bigoplus_{w\in W}K(1\otimes\dot{w}\otimes 1)\\&\cong\bigoplus_{w\in W}K^{(w\chi)}.\end{aligned}$$

(ii) Let $\alpha\in\Delta$ and $\Theta=\{\alpha\}$. Then

$$\begin{aligned}\mathcal{J}_\Theta(K[G]\otimes_{K[P]}K^{(\chi)},M^{(\chi)})&=K[M_\Theta]\otimes_{K[P_\Theta]}K[G]\otimes_{K[P]}K^{(\chi)}\\&\cong\bigoplus_{w\in[W_\Theta\backslash W]}K[M_\Theta]\otimes_{K[P\cap M_\Theta]}K^{(w\chi)}.\end{aligned}$$

PROOF. (i) The Bruhat decomposition $G=\coprod_{w\in W}PwP$ implies

$$K[T]\otimes_{K[P]}K[G]\otimes_{K[P]}K^{(\chi)}=\bigoplus_{w\in W}K(1\otimes\dot{w}\otimes 1).$$

The assertion then follows from the property that $1\otimes\dot{w}\otimes 1$, for $w\in W$, are linearly independent in $K[[T]]\otimes_{K[[P]]}M^{(\chi)}$ (Proposition 3.9).

(ii) The Bruhat decomposition $G=\coprod_{w\in[W_\Theta\backslash W]}P_\Theta wP$ implies

$$K[M_\Theta]\otimes_{K[P_\Theta]}K[G]\otimes_{K[P]}K^{(\chi)}=\bigoplus_{w\in[W_\Theta\backslash W]}K[M_\Theta](1\otimes\dot{w}\otimes 1).$$

Since $w^{-1}\alpha>0$, we have $wPw^{-1}\cap M_\Theta=TU_\alpha=P\cap M_\Theta$, so

$$K[M_\Theta](1\otimes\dot{w}\otimes 1)\cong K[M_\Theta]\otimes_{K[P\cap M_\Theta]}K^{(w\chi)}.$$

We have to show that for a nonzero $\mu_0(1\otimes\dot{w}\otimes 1)\in K[M_\Theta](1\otimes\dot{w}\otimes 1)$, its image in $\mathcal{J}_\Theta(K[G]\otimes_{K[P]}K^{(\chi)},M^{(\chi)})$ is nonzero. Let $s=s_\alpha$. Since $M_\Theta=P\coprod PsP$, we can write $\mu_0=\mu'+\mu''$, with $\operatorname{supp}\mu'\subseteq P$ and $\operatorname{supp}\mu''\subseteq PsP$, and consider each term separately.

The first term can be handled easily, because $\mu'(1\otimes\dot{w}\otimes 1)=c(1\otimes\dot{w}\otimes 1)$, for some $c\in K$. If $c(1\otimes\dot{w}\otimes 1)$ is nonzero in $K[M_\Theta]\otimes_{K[P_\Theta]}K[G]\otimes_{K[P]}K^{(\chi)}$, then $c\neq 0$, which implies that the image of $c(1\otimes\dot{w}\otimes 1)$ in $\mathcal{J}_\Theta(K[G]\otimes_{K[P]}K^{(\chi)},M^{(\chi)})$ is nonzero as well.

It remains to consider μ''. By fixing a representative $\dot{s}$ of $s=s_\alpha\in W$, we can write μ'' uniquely as $\mu''=a_1p_1\dot{s}u_1+\cdots+a_kp_k\dot{s}u_k$, with $a_i\in K$, $p_i\in P$, and $u_i\in U_\alpha$. Then

$$\mu''(1\otimes\dot{w}\otimes 1)=1\otimes(b_1\dot{s}u_1+\cdots+b_k\dot{s}u_k)\dot{w}\otimes 1.$$

Acting by an appropriate element of T, we obtain

$$\mu'''(1\otimes\dot{w}\otimes 1)=1\otimes(c_1\dot{s}u_1'+\cdots+c_k\dot{s}u_k')\dot{w}\otimes 1,$$

where $u_i'\in U_{\alpha,1}$. This element can be written as

$$\mu'''(1\otimes\dot{w}\otimes 1)=\eta(1\otimes\dot{s}\dot{w}\otimes 1),$$

where $\eta=(c_1\dot{s}u_1'+\cdots+c_k\dot{s}u_k')\dot{s}^{-1}\in K[[U_{-\alpha,1}]]$. Since $w^{-1}\alpha>0$, we have $U_{-\alpha,1}\subseteq V^{\pm}_{sw,\frac{1}{2}}$, and η belongs to $K[[V^{\pm}_{sw,\frac{1}{2}}]]$. Notice that in $K[M_\Theta](1\otimes\dot{w}\otimes 1)$ we have

$$\mu''(1\otimes\dot{w}\otimes 1)\neq 0\iff\mu'''(1\otimes\dot{w}\otimes 1)\neq 0\iff\eta\neq 0.$$

By way of contradiction let us assume $\mu''(1\otimes\dot{w}\otimes 1)$ is nonzero in $K[M_\Theta](1\otimes\dot{w}\otimes 1)$, but zero in $\mathcal{J}_\Theta(K[G]\otimes_{K[P]}K^{(\chi)},M^{(\chi)})$. Then $\eta\neq 0$. We may select $t\in T_\alpha$ such that $|\beta(t)|_L<1$ for all $\beta\in\Phi^+$, $\beta\neq\alpha$. Then

$$tU_{\Theta,n}t^{-1}\subseteq U_{\Theta,n+1}$$

and $t\eta t^{-1}=\eta$. Repeating a similar process as in the proof of Proposition 3.9, we obtain

$$\eta\dot{s}\dot{w}\otimes 1=((u_1-1)\nu_1+\cdots+(u_r-1)\nu_r)\dot{s}\dot{w}\otimes 1, \tag{4.3}$$

where $u_i\in U_{\Theta,0}$, and $\nu_i\in K[[V^{\pm}_{sw,\frac{1}{2}}]]$.

Write $\eta=c_1v_1+\cdots+c_kv_k$, where the coefficients $c_i\in K$ are nonzero and the elements $v_i\in U_{-\alpha,1}\subseteq V^{\pm}_{sw,\frac{1}{2}}$ are distinct. There exists $n\in\mathbb{N}$ such that v_iG_n, $i=1,\dots,k$ are pairwise disjoint. Acting on (4.3) by $(w\chi)(t^n)^{-1}t^n$, we get

$$\eta\dot{s}\dot{w}\otimes 1=((u_1'-1)\nu_1'+\cdots+(u_r'-1)\nu_r')\dot{s}\dot{w}\otimes 1, \tag{4.4}$$

where $u_i'\in U_{\Theta,n}$ and $\nu_i'\in K[[V^{\pm}_{sw,\frac{1}{2}}]]$. We remark that $t^n\nu_i\dot{s}\dot{w}\otimes 1$ may not belong to $K[[V^{\pm}_{sw,\frac{1}{2}}]]\dot{s}\dot{w}\otimes 1$, but the terms for different $\nu_i's$ which fall out of the $\dot{s}\dot{w}$-component will cancel, leading to an expression as above. We

extend $\{v_1, \dots, v_k\}$ so that $\{v_1, \dots, v_r\}$ is a set of coset representatives of $V^{\pm}_{sw,\frac{1}{2}}/V^{\pm}_{sw,n}$. Then

$$K[[V^{\pm}_{sw,\frac{1}{2}}]] = \bigoplus_{i=1}^{r} K[[V^{\pm}_{sw,n}]]v_i,$$

and equation (4.4) implies

$$c_i v_i \dot{s}\dot{w} \otimes 1 = ((u_1' - 1)\nu_{i,1} + \cdots + (u_r' - 1)\nu_{i,r})v_i \dot{s}\dot{w} \otimes 1, \tag{4.5}$$

where $\nu_{i,j} \in K[[V^{\pm}_{sw,n}]]$. Then, we apply the same reasoning as in the proof of Propositions 3.9 to show that (4.5) is impossible. □

5. Reducibility of principal series

A character χ of T is called *regular* if $w\chi \neq \chi$ for any nontrivial $w \in W$.

Proposition 5.1. *Let $\chi : T \to o_K^{\times}$ be a regular continuous character. Suppose that any nonzero $K[[G]]$-submodule N of $M^{(\chi)}$ satisfies $\mathcal{J}(N, M^{(\chi)}) \cap \bigoplus_{w\in W} K(1 \otimes \dot{w} \otimes 1) \neq 0$. Then*

(i) $M^{(\chi)}$ is a simple $K[[G]]$-module.

(ii) $\mathrm{Ind}_P^G(\chi^{-1})$ is irreducible.

Proof. Let N be a nonzero $K[[G]]$-submodule of $M^{(\chi)}$. Define

$$S = \{n \in N \mid \mathcal{J}(n, M^{(\chi)}) \in \bigoplus_{w\in W} K(1 \otimes \dot{w} \otimes 1)\}.$$

Then $\mathcal{J}(S, M^{(\chi)}) \neq 0$. Take a nonzero $\sigma \in \mathcal{J}(S, M^{(\chi)})$ and write it as

$$\sigma = \sum_{w\in W} \sigma_w, \quad \sigma_w = c_w(1 \otimes \dot{w} \otimes 1).$$

Fix $w \in W$ such that $c_w \neq 0$. We claim that $1 \otimes \dot{w} \otimes 1 \in \mathcal{J}(S, M^{(\chi)})$. If $c_x = 0$ for all $x \neq w$, we are done. Otherwise, there exists $y \neq w$ such that $\sigma_y \neq 0$. By regularity, there exists $t \in T$ such that $w\chi(t) \neq y\chi(t)$. Set $\sigma' = (y\chi(t))^{-1}t\sigma - \sigma$. Then $\sigma' \in \mathcal{J}(S, M^{(\chi)})$ and $\sigma'_y = 0$ but $\sigma'_w \neq 0$. By repeating this process finitely many times we show that $1 \otimes \dot{w} \otimes 1 \in \mathcal{J}(S, M^{(\chi)}) \subseteq \mathcal{J}(N, M^{(\chi)})$. Proposition 4.3 then implies $N = M^{(\chi)}$, proving (i). Assertion (ii) then follows by the Schneider-Teitelbaum duality. □

The reducibility of unitary principal series has been resolved by Abe and Herzig (see Theorem 1.1 in [1]). Thus, Proposition 5.1 does not prove new results. Instead, its purpose is to show an application of Jacquet tensors, which we hope can be extended to more general cases. We are interested in the reducibility of $\mathrm{Ind}_P^G(\chi^{-1})$ for an arbitrary continuous character χ. By the duality, $\mathrm{Ind}_P^G(\chi^{-1})$ is reducible if and only if $M^{(\chi)}$ contains a proper nonzero $K[[G]]$-submodule S. We would like to reduce the question of reducibility of principal series to the rank one case, following the approach similar to the

classical case described in [2], but working on the dual side, with $\mathcal{J}_\Theta(__, M^{(\chi)})$ palying the role of Jacquet modules. For such an approach, we need a better understanding of $\mathcal{J}_\Theta(S, M^{(\chi)})$.

References

[1] N. Abe and F. Herzig, *On the irreducibility of p-adic Banach principal series of p-adic reductive groups,* preprint.

[2] W. Alsibiani and D. Ban, *Filtrations of smooth principal series and Iwasawa modules,* Bull. Iranian Math. Soc. **43** (2017), 3–16.

[3] K. Ardakov and K. A. Brown, *Ring-theoretic properties of Iwasawa algebras: a survey,* Doc. Math., Extra Vol. (2006), 7–33.

[4] D. Ban, *p*-adic Banach Space Representations: With Applications to Principal Series, Lecture Notes in Math. **2325**, Springer, Cham, 2023.

[5] D. Ban and J. Hundley, *On reducibility of p-adic principal series representations of p-adic groups*, Represent. Theory **20** (2016), 249–262.

[6] D. Ban and C. Jantzen, *Degenerate principal series for even-orthogonal groups*, Represent. Theory **7** (2003), 440–480.

[7] D. Ban and J. Roberts, *Compactly supported distributions on p-adic Lie groups,* preprint.

[8] I. N. Bernstein and A. V. Zelevinsky, *Induced representations of reductive* $\mathfrak{p}$*-adic groups. I*, Ann. Sci. École Norm. Sup. (4) **10** (1977), 441–472.

[9] A. Borel, Linear algebraic groups, Grad. Texts in Math. **126**, second edition, Springer-Verlag, New York, 1991.

[10] W. Casselman, *Introduction to the theory of admissible representations of p-adic reductive groups*, preprint.

[11] D. S. Dummit and R. M. Foote, Abstract algebra, third edition, John Wiley & Sons, Inc., Hoboken, NJ, 2004.

[12] M. Emerton, *Jacquet modules of locally analytic representations of p-adic reductive groups. I. Construction and first properties*, Ann. Sci. École Norm. Sup.(4) **39** (2006), 775–839.

[13] M. Emerton, *Ordinary parts of admissible representations of p-adic reductive groups I. Definition and first properties*, Astérisque (2010), no. 331, 355–402.

[14] C. Jantzen, *On supports of induced representations for symplectic and odd-orthogonal groups*, Amer. J. Math. **119** (1997), 1213–1262.

[15] T. Y. Lam, Lectures on modules and rings, Grad. Texts in Math. **189**, Springer-Verlag, New York, 1999.

[16] C. Mœglin and M. Tadić, *Construction of discrete series for classical p-adic groups*, J. Amer. Math. Soc. **15** (2002), 715–786.

[17] P. Schneider, Nonarchimedean functional analysis, Springer Monogr. Math., Springer-Verlag, Berlin, 2002.

[18] P. Schneider, *p*-adic Lie groups, Grundlehren Math. Wiss., Springer, Heidelberg, 2011.

[19] P. Schneider and J. Teitelbaum, *Banach space representations and Iwasawa theory*, Israel J. Math. **127** (2002), 359–380.

[20] M. Tadić, *Structure arising from induction and Jacquet modules of representations of classical p-adic groups*, J. Algebra **177** (1995), 1–33.

[21] A. V. Zelevinsky, *Induced representations of reductive* $\mathfrak{p}$*-adic groups. II. On irreducible representations of* $\mathrm{GL}(n)$, Ann. Sci. École Norm. Sup. (4) **13** (1980), 165–210.

Jacquetovi tenzori

Dubravka Ban

Sažetak. Neka je G rascjepiva reduktivna p-adska grupa. Kategorija dopustivih p-adskih Banachovih reprezentacija od G je ekvivalentna odgovarajućoj kategoriji konačno generiranih Iwasawinih modula, pomoću dualnog preslikavanja $V \mapsto V'$. U ovom radu definiramo tenzorske produkte na Iwasawinim modulima, koji su namijenjeni služiti kao dualna varijanta Jacquetovih modula. Opisana su neka svojstva Jacquetovih tenzora i njihova primjena na proučavanje paraboličkiinduciranih reprezentacija.

School of Mathematical and Statistical Sciences
Southern Illinois University
1245 Lincoln Drive, Carbondale, Illinois 62901, U.S.A.
E-mail: dban@siu.edu

Received: 11.6.2023.
Revised: 24.7.2023.
Accepted: 19.9.2023.

RAD HAZU. MATEMATIČKE ZNANOSTI
Vol. 28 = 558 (2024): 425-433
DOI: https://doi.org/10.21857/yl4okf8179

BERNSTEIN PROJECTOR OF COXETER DEPTH

Allen Moy and Gordan Savin

We dedicate this paper to our friend, colleague and teacher Marko Tadić on the occasion of his 70th birthday. In particular, both authors have enjoyed friendship with Marko for over four decades, and the second author thanks Marko for introducing him to the beautiful subject of representation theory.

Abstract. We decompose the Bernstein projector of Coxeter depth as a sum of the Bernstein projector of depth 0 and the projector on simple supercuspidal representations.

1. Introduction

Suppose k is a non-archimedean local field and $\mathbf{G}$ is a simple, simply connected group defined and split over k. Let $\mathcal{G} = \mathbf{G}(k)$ denote the group of k-rational points. Let $\mathcal{B}$ be the corresponding Bruhat-Tits building [4]. As a consequence of the work [5], [6] of Moy-Prasad on unrefined minimal K-types, for any irreducible representation (π, V) of $\mathcal{G}$, there is a nonnegative rational number $\rho(\pi)$ (called the depth of π). It can be characterized as the smallest rational number r so that there exists $x \in \mathcal{B}$ with $V^{\mathcal{G}_{x,r^+}} \neq \{0\}$, where $\mathcal{G}_{x,r^+}$ is the Moy-Prasad subgroup of $\mathcal{G}$ attached to x. Moreover, if we fix $r \geq 0$, then any smooth representation (π, V) of $\mathcal{G}$ can be decomposed, as a G-module,

$$V = V_r \oplus V_r'$$

where $V_r \subset V$ is a $\mathcal{G}$-submodule generated by $V^{\mathcal{G}_{x,r^+}}$ as x runs over $\mathcal{B}$ [2, Proposition 5.2]. As a consequence of the work [1] of Bernstein, there exist a $\mathcal{G}$-invariant distribution $P_{\leq r}$, an element of the Bernstein center, such that $\pi(P_{\leq r})$ is the projector on V_r, for every smooth representation (π, V).

In [3], Bezrukavnikov–Kazhdan–Varshavsky give a presentation of the distribution $P_{\leq r}$ using a refined simplicial structure on the building, as follows. If N is a natural number such that $r \in \mathbb{Z}/N$, divide each chamber C into

2020 *Mathematics Subject Classification.* 22E50, 22E35.
Key words and phrases. Simple groups over local fields, Bernstein projectors, simple supercuspidal representations.

$N^{\dim \mathcal{B}}$ congruent simplices (each simplex is thus obtained from C by rescaling by the factor $1/N$) and denote the building with this simplicial structure by $\mathcal{B}_N$. The key property of $\mathcal{B}_N$ are that the groups $\mathcal{G}_{x,r^+}$ are constant on its facets. Fix a Haar measure μ on $\mathcal{G}$, and for any open compact subgroup K of $\mathcal{G}$ define the $C_c(\mathcal{G})$ idempotent:

$$e_K \ := \ \frac{1}{\mu(K)} \ 1_K \ .$$

Then $P_{\leq r}$ is an Euler–Poincaré sum

$$P_{\leq r} \ = \ \sum_{F \subset \mathcal{B}_N} (-1)^{\dim(F)} \, e_{\mathcal{G}_{x,r^+}}$$

where x is (any) point in the facet F.

Observe that, for a fixed r, there are infinitely many N such that $r \in \mathbb{Z}/N$. Accordingly, there are many expressions for the depth $\leq r$ projector $P_{\leq r}$. However, the sign $(-1)^{\dim F}$ in the Euler-Poincare formula for $P_{\leq r}$ is the Euler characteristic of the facet F, and additivity of the Euler characteristic implies that the different expressions are the same. For example, if r is an integer then we can use either $\mathcal{B}$ or $\mathcal{B}_N$ to write down the projector $P_{\leq r}$. The equality of the expressions boils down to the fact that for every facet F of $\mathcal{B}$

$$(-1)^{\dim F} = \sum_{E \in \mathcal{B}_N, E \subset F} (-1)^{\dim E}.$$

Thus, more generally, if we break up $\mathcal{B}$ into a disjoint union of cells R such that the groups $\mathcal{G}_{x,r^+}$ are constant on each cell R, then we have an expression

$$P_{\leq r} = \sum_{R \subset \mathcal{B}} (-1)^{\dim R} \cdot e_{\mathcal{G}_{x,r^+}}$$

where x is (any) point in R. In particular, one can use the canonical partition of $\mathcal{B}$ defined on each apartment $\mathcal{A}$ by hyperplanes $\psi = r$ cut out by all affine roots ψ. We shall use this observation to prove that $P_{\leq r}$ is constant in the range $0 < r < 1/h$ where h is the Coxeter number attached to the root system Φ. It follows at once that $\mathcal{G}$ has no irreducible representations of positive depth less than $1/h$.

Next, as r approaches $1/h$, we compare $P_{\leq r}$ and $P_{\leq \frac{1}{h}}$. We obtain

$$P_{\leq \frac{1}{h}} = P_{\leq \frac{1}{h} - \epsilon} + P^{\mathrm{sc}}_{\frac{1}{h}}$$

where $P^{\mathrm{sc}}_{\frac{1}{h}}$ is the Bernstein projector associated to simple supercuspidal unrefined data [7]. This implies that all irreducible representations of $\mathcal{G}$ of the depth $1/h$ are super cuspidal, in fact induced from an open compact subgroup. (These results were previously obtained by Reeder and Yu, essentially

a consequence of [8, Proposition 8.1].) Let $h' = 1 - \frac{1}{h}$. A similar analysis implies that $P_{\leq r}$ is constant in the range $h' < r < 1$ as well as

$$P_{\leq h'} = P_{\leq h'-\epsilon} + P^{\mathrm{sc}}_{h'}$$

where $P^{\mathrm{sc}}_{h'}$ is another super-cuspidal projector. Thus $\mathcal{G}$ has no irreducible representations of depth $h' < r < 1$, and those of the depth h' are supercuspidal, induced from an open compact subgroup.

We finish the introduction with the following remark. Quotient groups $\mathcal{G}_{x,r}/\mathcal{G}_{x,r^+}$ depend only on r modulo $\mathbb{Z}$. Hence our analysis is applicable to depths in the range $n < r < n + 1/h$ and $n + h' < r < n + 1$, where n is any non-negative integer. As a consequence, $\mathcal{G}$ has no irreducible representations of these depths and irreducible representations of the depths $n + 1/h$ and $n + h'$ are all super cuspidal.

2. Notation

Let $\mathbf{S}$ be a maximal k-split torus of $\mathbf{G}$. Let $\mathcal{S} = \mathbf{S}(k)$. Let $\Phi(\mathcal{S})$ be the set roots of $\mathbf{G}$ with respect to $\mathbf{S}$, and let

$$\Psi(\mathcal{S}) \ := \ \{ \ \alpha + k \mid \alpha \ \in \ \Phi \ , \ k \in \mathbb{Z} \ \} \cup \{0, 1, 2 \ldots\}$$

be the set of affine roots (with respect to $\mathbf{S}$) where constants are also called imaginary roots. When clear, we abbreviate these two sets to Φ and Ψ respectively. For an affine root $\psi \in \Psi$, let $\mathcal{X}_\psi$ denote the attached affine root group in $\mathcal{G}$. If ψ is an imaginary root, that is $\psi = n$ a non-negative integer, then $\mathcal{X}_\psi = \mathcal{S}_n$ where

$$\mathcal{S} \supset \mathcal{S}_0 \supset \mathcal{S}_1 \supset \mathcal{S}_2 \ldots$$

is the filtration of $\mathcal{S}$ by principal congruence subgroups.

Let $x \in \mathcal{B}$. Pick an apartment $\mathcal{A}$ of $\mathcal{B}$ containing x. Let $\mathcal{S}$ be a maximal split torus stabilizing $\mathcal{A}$. Let $r \geq 0$. We have the Moy-Prasad groups

$$\mathcal{G}_{x,r} = \langle \mathcal{X}_\psi : \psi(x) \geq r \rangle \text{ and } \ \mathcal{G}_{x,r^+} = \langle \mathcal{X}_\psi : \psi(x) > r \rangle,$$

that is, the groups generated by affine root groups (including imaginary roots) $\mathcal{X}_\psi$ such that $\psi(x) \geq r$ and $\psi(x) > r$, respectively.

If χ is a character of $\mathcal{G}_{x,r}$ define the $C_c(\mathcal{G})$ idempotent:

$$e_{\mathcal{G}_{x,r},\chi} = \begin{cases} \frac{1}{\mu(\mathcal{G}_{x,r})} \ \chi & \text{on } \mathcal{G}_{x,r} \\ \\ 0 & \text{off } \mathcal{G}_{x,r} \end{cases}$$

3. Two supercuspidal projectors

We define a projector $P^{\mathrm{sc}}_{\frac{1}{h}}$ to simple supercuspidal representationa. Let C be a chamber in an apartment $\mathcal{A}$ and let $\Delta = \{\psi_0, \dots, \psi_\ell\}$ the corresponding set of simple affine roots. Then

$$n_0\psi_0 + \ldots + n_\ell\psi_\ell = 1$$

where $n_0 + \ldots + n_\ell = h$, is the Coxeter number. Let x_C be the barycenter of C, that is, the unique point in C such that $\psi_i(x) = \frac{1}{h}$ for all simple roots. Then

$$\mathcal{G}_{x_C,\frac{1}{h}}/\mathcal{G}_{x_C,\frac{1}{h}^+} = \mathfrak{X}_{\psi_0}/\mathfrak{X}_{\psi_0^+} \oplus \ldots \oplus \mathfrak{X}_{\psi_\ell}/\mathfrak{X}_{\psi_\ell^+}.$$

A character χ of $\mathcal{G}_{x_C,\frac{1}{h}}/\mathcal{G}_{x_C,\frac{1}{h}^+}$ is cuspidal if it is non-trivial on each of the $\ell+1$ summands. Then x_C is a vertex in the refined building $\mathcal{B}_h$ and (x_C, χ) is a cuspidal pair of depth $1/h$ in the sense of [7]. The group $\mathcal{G}$ acts with finitely many orbits on the collection of these cuspidal pairs and if follows from the main result [7] that the sum (over all chambers)

$$P^{\mathrm{sc}} = \sum_{C\subset\mathcal{B}} \sum_{\chi-\mathrm{cuspidal}} e_{\mathcal{G}_{x_C,\frac{1}{h}},\chi}$$

is an idempotent in the Bernstein center. Moreover, P^{sc} acts nontrivially only on a class of supercuspidal representations of $\mathcal{G}$, also known as simple supercuspidal representations.

We now define a second projector. The definition is similar. Observe that $\psi \mapsto \phi = 1 - \psi$ is an involution on the set of non-imaginary affine roots, and $\psi = r$ is equivalent to $\phi = 1 - r$. Let $\phi_i = 1 - \psi_i$, for the simple roots ψ_i, and let $h' = 1 - 1/h$. Then

$$\mathcal{G}_{x_C,h'}/\mathcal{G}_{x_C,h'^+} = \mathfrak{X}_{\phi_0}/\mathfrak{X}_{\phi_0^+} \oplus \ldots \oplus \mathfrak{X}_{\phi_\ell}/\mathfrak{X}_{\phi_\ell^+}.$$

A character χ of $\mathcal{G}_{x_C,h'}/\mathcal{G}_{x_C,h'^+}$ is cuspidal if it is non-trivial on each of $\ell+1$ summands. Then

$$P^{\mathrm{sc}}_{h'} = \sum_{C\subset\mathcal{B}} \sum_{\chi-\mathrm{cuspidal}} e_{\mathcal{G}_{x_C,h'},\chi}$$

is an idempotent in the Bernstein center, by the main result [7], that acts non-trivially on a class of supercuspidal representations.

4. Main work

In this section, as the first result, we shall prove that $P_{\leq r}$ is constant in the range $0 < r < \frac{1}{h}$. Recall that the simplicial decomposition of $\mathcal{B}$ on each apartment is cut out by hyperplanes $\psi = 0$ for all non-imaginary affine roots. Let us refine this by adding hyperplanes $\psi = r$ for all non-imaginary affine roots. Let $\mathcal{B}_r$ denote the resulting cell decomposition. It is clear that that the groups $\mathcal{G}_{x,r^+}$ are constant on cells.

PROPOSITION 4.1. *Let h be the Coxeter number. Then $P_{\leq s} = P_{\leq r}$ for all $0 < s < r \leq 1/h$.*

PROOF. Let C be a chamber in an apartment $\mathcal{A}$ and let $\Delta = \{\psi_0, \dots, \psi_\ell\}$ the corresponding set of simple affine roots. For every facet F of C let Φ_F be the set of affine roots vanishing on F. It is a root system. Let Φ_F^+ be the roots positive on the interior of C, and let $\Delta_F \subset \Phi_F^+$ be the corresponding set of simple roots. Then Δ_F is a subset of Δ. In this way the facets of C correspond one-one to proper ($\subsetneq$) subsets of Δ, where C corresponds to empty set.

Assume $r < 1/h$. Let $\bar{C}$ denote the closure of C. In order to understand $\mathcal{B}_r$, we organize hyperplanes $\psi = r$ that intersect and partition $\bar{C}$ as follows. We have two steps:

First step:

In this step, we partition C according to its facets. To a facet F of C, define

$$X_F^r = \{x \in \bar{C} \mid \psi(x) \leq r \ \text{ for } \psi \in \Delta_F \text{ and } \psi(x) > r \ \text{ for } \psi \in \Delta \setminus \Delta_F\}.$$

For every $\psi \in \Delta$ and $x \in \bar{C}$, either $\psi(x) > r$ or $\psi(x) \leq r$. Thus we evidently have the disjoint union

$$\bar{C} = \cup_{F \subseteq \bar{C}} X_F^r. \tag{4.1}$$

Observe that X_C^r is an open set (hence a single cell of dimension ℓ). It is non-empty precisely since $r < 1/h$.

Let V_F be a closed positive Weyl chamber for Δ_F (so $\dim(V_F) + \dim(F) = \ell$). It may be convenient to realize V_F as a subset of the affine subspace $H_F \subset \mathcal{A}$ containing the barycenter x_F of F as the origin, perpendicular and complementary to F. Let $V_F^r \subset V_F$ be cut out by inequalities $\psi \leq r$ for all $\psi \in \Delta_F$. Observe that we have a homeomorphism

$$X_F^r \cong F \times V_F^r.$$

Indeed, the cross sections of X_F^r parallel to F are parameterized by points in V_F^r. Each cross section can be projected orthogonally on F where it can be identified by F by radial homothety centered at x_F.

Second step:

We decompose each X_F^r into cells cut out by all hyperplanes $\psi = r$ for all $\psi \in \Phi_F^+$. Under the above homeomorphism this amounts to decomposing V_F^r. In this way we obtained a cell decomposition of $\bar{C}$ such that the groups $\mathcal{G}_{x,r^+}$ are constant on each cell.

Next, we need the following lemma.

LEMMA 4.2. *Let $0 < s < r < 1/h$. For any face F of C, there exists a cell-preserving homeomorphism $\varphi : X_F^r \to X_F^s$ such that $\mathcal{G}_{x,r^+} = \mathcal{G}_{\varphi(x),s^+}$ for every $x \in X_F^r$.*

PROOF. Using the identifications $X_F^r = F \times V_F^r$ and $X_F^s = F \times V_F^s$, we define φ as identity on F and rescaling by the factor s/r on V_F^r. The resulting map sends half planes $\psi \leq r$ to halfplanes $\psi \leq s$, for $\psi \in \Phi_F^+$. The lemma follows. □

The maps constructed in the lemma patch together to give a homeomorphism $f : \mathcal{B}_r \to \mathcal{B}_s$ respecting the two cell decompositions, and $\mathcal{G}_{x,r^+} = \mathcal{G}_{f(x),s^+}$ for any $x \in \mathcal{B}$. Hence $P_{\leq r} = P_{\leq s}$, as desired.

□

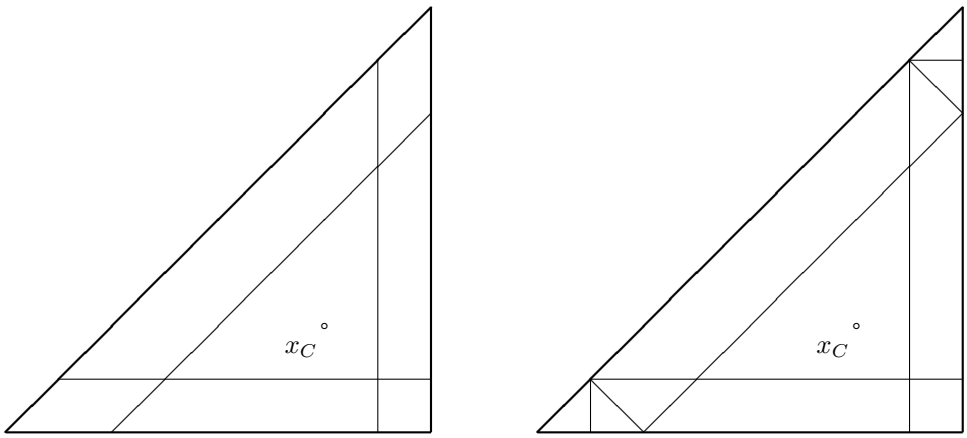

FIGURE 1. Illustration of the two steps in Proposition 4.1 for the root system C2 and $r = 1/8$

Next we analyze the projector $P_{\frac{1}{h}}$. Recall the cuspidal projector

$$P_{\frac{1}{h}}^{\mathrm{sc}} = \sum_{C \subset \mathcal{B}} \sum_{\chi - \text{cuspidal}} e_{\mathcal{G}_{x_C, \frac{1}{h}}, \chi}.$$

PROPOSITION 4.3. *Let h be the Coxeter number. Let $0 < r < 1/h$. Then*

$$P_{\leq \frac{1}{h}} = P_{\leq r} + P_{\frac{1}{h}}^{\mathrm{sc}}.$$

PROOF. We have to understand how the decomposition (4.1) changes at $r = 1/h$. As we observed earlier, X_C^r is an open set that becomes the empty set at $r = 1/h$. Instead, at this depth, we have a new cell x_C, the barycenter of C. Thus we have

$$\bar{C} = \cup_{F \subsetneq C} \ X_F^{1/h} \ \cup \ \{x_C\}.$$

If F is a facet of C then X_F^r contains a cell

$$Y_F^r = \{x \in \bar{C} \mid \psi(x) = r \ \text{ for } \psi \in \Delta_F \text{ and } \psi(x) > r \ \text{ for } \psi \in \Delta \setminus \Delta_F\}.$$

Observe that $Y_C^r = X_C^r$, otherwise Y_F^r is boundary facet of the closure of X_C^r, homeomorphic to F by the homothety centered at x_C. In other words, if $\bar{X}_C^r$ denotes the closure of X_C^r, then

$$\bar{X}_C^r = \cup_{F \subseteq C} Y_F^r.$$

Now an analogue of Lemma 4.2 holds, except this time we have a homeomorphism from $X_F^r \setminus Y_F^r$ to $X_F^{1/h}$. These homomorphisms patch to a homomorphism

$$f : \mathcal{B}_r \setminus (\cup_{C \subset \mathcal{B}} \bar{X}_C^r) \to \mathcal{B}_{\frac{1}{h}} \setminus (\cup_{C \subset \mathcal{B}} \{x_C\})$$

Thus it follows that

$$P_{\leq 1/h} - P_{\leq r} = \sum_{C \subset \mathcal{B}} (e_{\mathcal{G}_{x_C, \frac{1}{h}^+}} - \sum_{F \subset C} (-1)^{\dim F} \cdot e_{\mathcal{G}_{Y_F^r, r^+}}).$$

The proposition follows from the following lemma:

LEMMA 4.4. *For any chamber C in $\mathcal{B}$,*

$$e_{\mathcal{G}_{x_C, \frac{1}{h}^+}} - \sum_{F \subset C} (-1)^{\dim F} \cdot e_{\mathcal{G}_{Y_F^r, r^+}} = \sum_{\chi - cuspidal} e_{\mathcal{G}_{x_C, \frac{1}{h}, \chi}}$$

PROOF. Observe that

$$\mathcal{G}_{x_C, \frac{1}{h}} / \mathcal{G}_{Y_F^r, r^+} = \oplus_{\psi \in \Delta_F} \mathcal{X}_\psi / \mathcal{X}_{\psi^+}.$$

Hence $e_{\mathcal{G}_{Y_F^r, r^+}}$ is the sum of $e_{x_C, \chi}$ over all characters χ trivial on $\mathcal{X}_\psi$ for $\psi \in \Delta_F$. The lemma follows from a simple inclusion-exclusion argument. ∎

∎

COROLLARY 4.5. *The group G has no representations of depth r, $0 < r < 1/h$. Irreducible representations of depth $1/h$ are all simple supercuspidal.*

Finally we consider $h' < r < 1$ where $h' = 1 - \frac{1}{h}$. Since $\psi \mapsto 1 - \psi$ is an involution on the set of non-imaginary affine roots it follows that $\mathcal{B}_r = \mathcal{B}_{1-r}$. Thus arguing in the same way as in the range $0 < r < \frac{1}{h}$, one sees that $P_{\leq r}$ is constant in the range $h' < r < 1$. As r crosses over h' (but slightly so) then

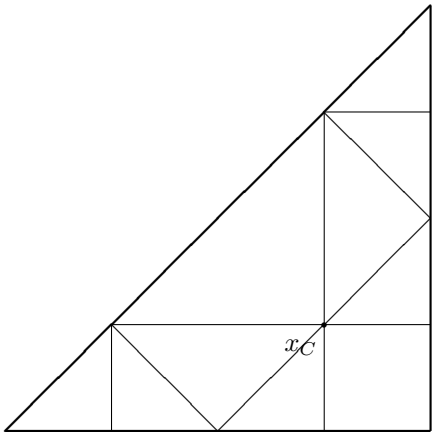

FIGURE 2. The canonical cell decomposition for the root system C2 and $r = 1/4$

the cell decomposition of $\mathcal{B}$ changes only at the barycenters of chambers. We leave details out for the readers to check that

$$P_{\leq h'} = P_{\leq h'-\epsilon} + P^{\mathrm{sc}}_{h'}.$$

REFERENCES

[1] J. Bernstein, *Le "centre" de Bernstein*, written by P. Deligne in Représentations des Groupes Réductifs sur un Corps Local, Hermann, Paris, 1984.
[2] M. Bestvina and G. Savin, *Bounded contractions for affine buildings*, Proc. Amer. Math. Soc. **148** (2020), 875–883.
[3] R. Bezrukavnikov, D. Kazhdan and V. Varshavsky, *On the depth r Bernstein projector*, Selecta Math. (N.S.) **22** (2016), 2271–1311.
[4] F. Bruhat and J. Tits, *Groupes réductifs sur un corps local I*, Inst. Hautes Études Sci. Publ. Math. (1972), no.41, 5–251.
[5] A. Moy and G. Prasad, *Unrefined minimal K-types for p-adic groups*, Invent. Math. **116** (1994), 393–408.
[6] A. Moy and G. Prasad, *Jacquet functors and unrefined minimal K-types*, Comment. Math. Helv. **71** (1996), 98–121.
[7] A. Moy and G. Savin, *Euler-Poincare formulae for positive depth Bernstein projectors*, `arXiv:2006.14648`.
[8] M. Reeder and J.-K. Yu, *Epipelagic representations and invariant theory*, J. Amer. Math. Soc. **27** (2014), 437–477.

Bernsteinov projektor pridružen Coxeterovom broju

Allen Moy i Gordan Savin

Sažetak. U ovom radu dokazujemo da se Bernsteinov projektor na reprezentacije Coxeterove dubine dekomponira na sumu Bernsteinovog projektora na reprezentacije dubine 0 i projektora na jednostavne superkuspidalne reprezentacije.

Allen Moy
Department of Mathematics
HKUST
Clear Water Bay, Hong Kong
E-mail: amoy@ust.hk

Gordan Savin
Department of Mathematics
University of Utah
Salt Lake City, UT 84112, USA
E-mail: savin@math.utah.edu

Received: 3.10.2023.
Revised: 1.11.2023.
Accepted: 14.11.2023.

The mathematical journal "Rad HAZU, Matematičke znanosti" (Rad Hrvat. Akad. Znan. Umjet. Mat. Znan.) (ISSN 1845-4100 (Print), ISSN 1849-2215 (Online)) is published by the Croatian Academy of Sciences and Arts (HAZU). The members of Editorial Board are mathematicians, Full members and Associate members of the Croatian Academy of Sciences and Arts.

"Rad HAZU, Matematičke znanosti" publishes original research papers from all fields of pure and applied mathematics. The journal is published annually. It is reviewed, cover-to-cover, by Mathematical Reviews (MathSciNet) and Zentralblatt MATH. Beginning with Volume 15 (2005), the journal is indexed in the Emerging Sources Citation Index, which is a part of Web of Science Core Collection. From 2015, the journal is indexed in Scopus.

Information for authors. Submission of a manuscript implies that the work has not been published before (except in the form of an abstract), that it is not under consideration for publication elsewhere, and that it will not be submitted to another journal while under review for *Rad HAZU*. Manuscripts should be submitted electronically, preferably by sending a *pdf* file to the Editor-in-Chief to the e-mail address `duje@math.hr`. On acceptance of the paper, the authors will also be asked to transmit the LaTeX source file. Manuscripts should be written in English. The first page should contain the article title, author and coauthors names, complete affiliation(s) (name of institution, city, state, and zip code), proposed running head (less than 40 characters), a short *abstract*, a list of *key words and phrases* and the AMS 2010 *Mathematics Subject Classification numbers*. *Figures* must be prepared in a form suitable for direct reproduction (the preferred format is *eps*). *References* should be arranged and numbered in alphabetical order. The following information should be provided for references to journals: names and initials of authors, full title of the paper, name of the journal, volume, year of publication and first and last page numbers. Abbreviations of journal names should follow Mathematical Reviews.
The editors would like to encourage submission of manuscripts written in the *radhazu* document class for LaTeX (the style files are available at `https://web.math.pmf.unizg.hr/~duje/radhazumz/`).

Address of the Editorial Office:
Hrvatska akademija znanosti i umjetnosti
Razred za matematičke, fizičke i kemijske znanosti
Zrinski trg 11, 10000 Zagreb, Croatia
E-mail: `kim@hazu.hr`
URL: `https://web.math.pmf.unizg.hr/~duje/radhazumz/`
`https://hrcak.srce.hr/radhazumat`

Nakladnik

HRVATSKA AKADEMIJA ZNANOSTI I UMJETNOSTI
Trg Nikole Šubića Zrinskog 11, HR-10000 Zagreb

Za nakladnika

Akademik Dario Vretenar, glavni tajnik

Tehnički urednik

Aco Zrnić

Naklada

150 primjeraka

Tisak

Stega tisak d.o.o.

ISSN 1845-4100

